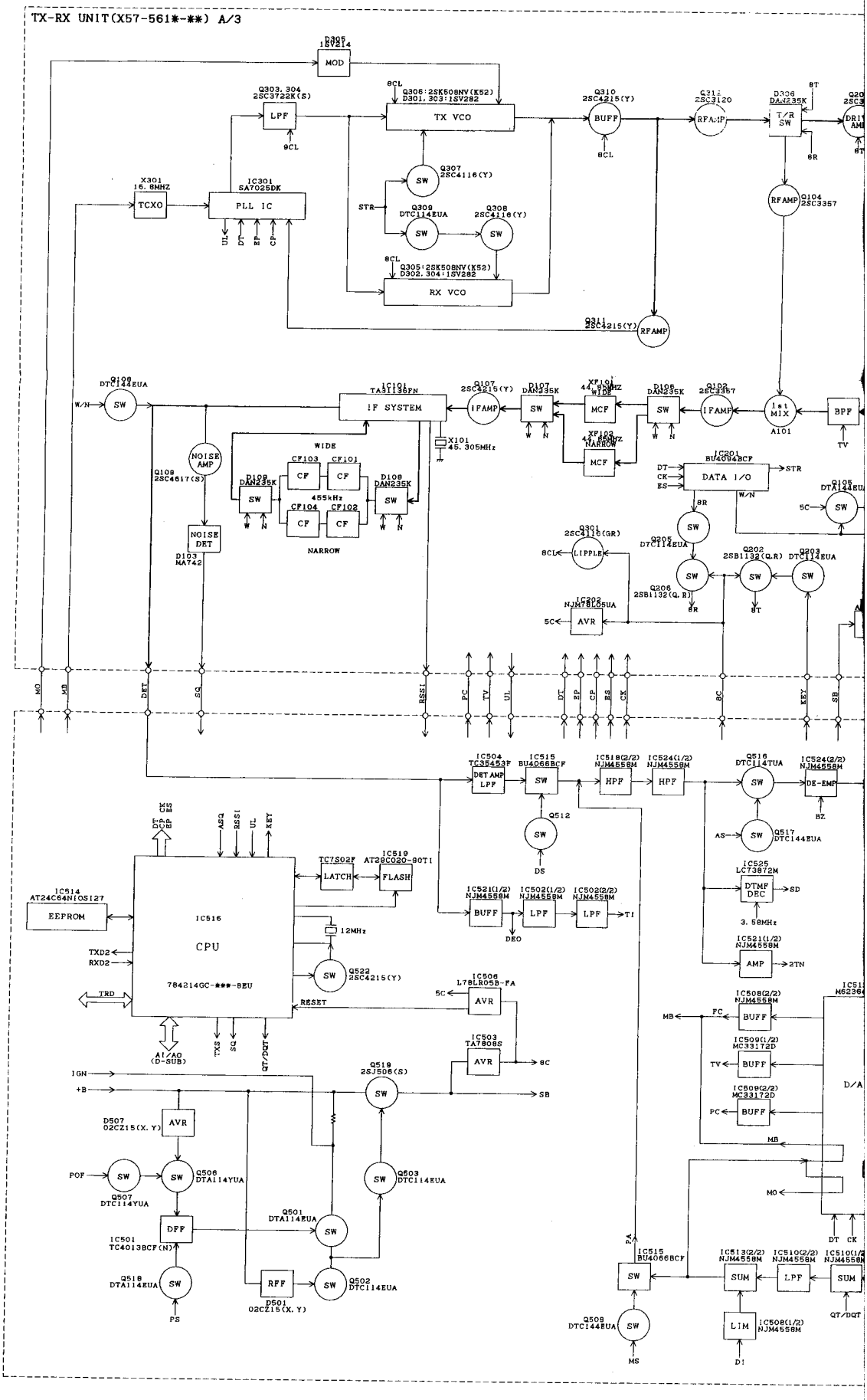
TX-RX UNIT(X57-561*-**) A/3
D305 1SV214
MOD
Q303, 304 2SC3722K(S)
LPF
Q306:2SK508NV(K52) D301, 303:1SV282
TX VCO
Q310 2SC4215(Y)
BUFF
C312 2SC3120
RFAMP
D306 DAN235K
T/R SW
X301 16.8MHZ
TCXO
IC301 SA7025DK
PLL IC
Q307 2SC4116(Y)
Q309 DTC114EUA
Q308 2SC4116(Y)
Q305:2SK508NV(K52) D302, 304:1SV282
RX VCO
Q311 2SC4215(Y)
Q104 2SC3357
Q108 DTC144EUA
W/N
IC101 TA31136FN
IF SYSTEM
Q107 2SC4215(Y)
IFAMP
D107 DAN235K
XF101 44.85MHZ WIDE
MCF
D106 DAN235K
Q102 2SC3357
1st MIX
A101
BPF
TV
XF102 44.85MHZ NARROW
X101 45.305MHz
WIDE
CF103
CF101
CF
D108 DAN235K
SW
455kHz
CF104
CF102
NARROW
NOISE AMP
Q109 2SC4617(S)
NOISE DET
D103 MA742
IC201 BU4094BCF
DATA I/O
STR
DT
CK
ES
Q105 DTA144EU
5C
Q301 2SC4116(GR)
LIPPLE
8CL
Q205 DTC114EUA
Q202 2SB1132(Q,R)
Q203 DTC114EUA
Q206 2SB1132(Q,R)
IC202 NJM78L05UA
AVR
MO
MB
DET
SQ
RSSI
PC
TV
UL
DT
SP
CP
RS
CK
BC
KEY
SB
IC504 TC35453F
DET AMP LPF
IC515 BU4066BCF
IC518(2/2) NJM4558M
HPF
IC524(1/2) NJM4558M
Q516 DTC114TUA
IC524(2/2) NJM4558M
DE-EMP
BZ
Q512
DS
Q517 DTC144EUA
AS
IC525 LC73872M
DTMF DEC
SD
3.58MHz
IC521(1/2) NJM4558M
AMP
2TN
IC514 AT24C64N10SI27
EEPROM
IC516
CPU
784214GC-***-8EU
TC7S02F
LATCH
IC519 AT29C020-90TI
FLASH
12MHz
Q522 2SC4215(Y)
IC521(1/2) NJM4558M
BUFF
IC502(1/2) NJM4558M
LPF
IC502(2/2) NJM4558M
DEO
TI
TXD2
RXD2
TRD
RESET
IC506 L78LR05B-FA
AVR
IC503 TA78085
8C
A1/A0 (D-SUB)
TXS
SQ
QT/DQT
IGN
+B
Q519 2SJ506(S)
SB
D507 02CZ15(X, Y)
POF
Q506 DTA114YUA
Q507 DTC114YUA
Q503 DTC114EUA
DFF
IC501 TC4013BCF(N)
Q501 DTA114EUA
Q518 DTA114EUA
PS
RFF
D501 02CZ15(X, Y)
Q502 DTC114EUA
IC508(2/2) NJM4558M
FC
IC509(1/2) MC33172D
IC509(2/2) MC33172D
D/A
PA
IC515 BU4066BCF
IC513(2/2) NJM4558M
IC510(2/2) NJM4558M
IC510(1/2) NJM4558M
SUM
Q508 DTC144EUA
MS
LIM
IC508(1/2) NJM4558M
DI

USE FOR	SYMBOL	REVISION NO	CODE	ISSUED	DATE
	1 X				19 - -
	2 X				19 - -
	3 X				19 - -
	4 X				19 - -
	5 X				19 - -
	6 X				19 - -
	7 X				19 - -
	8 X				19 - -
	9 X				19 - -

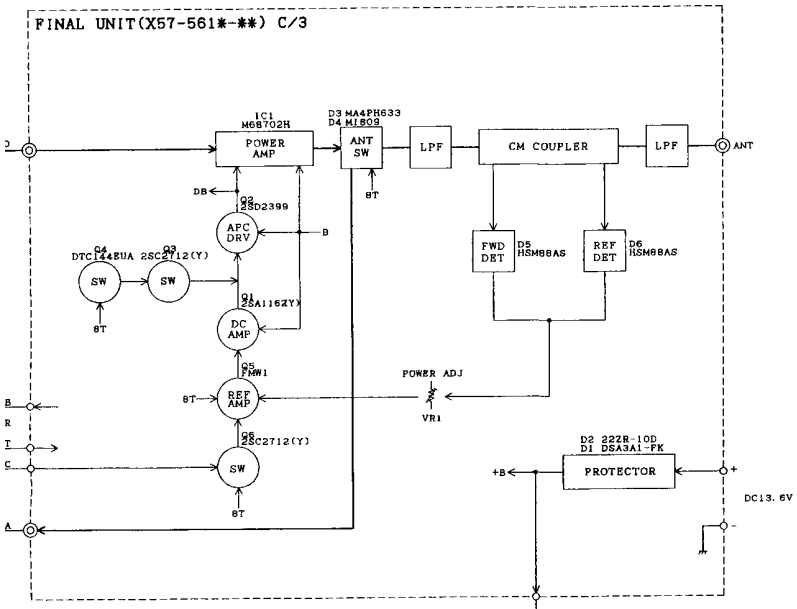

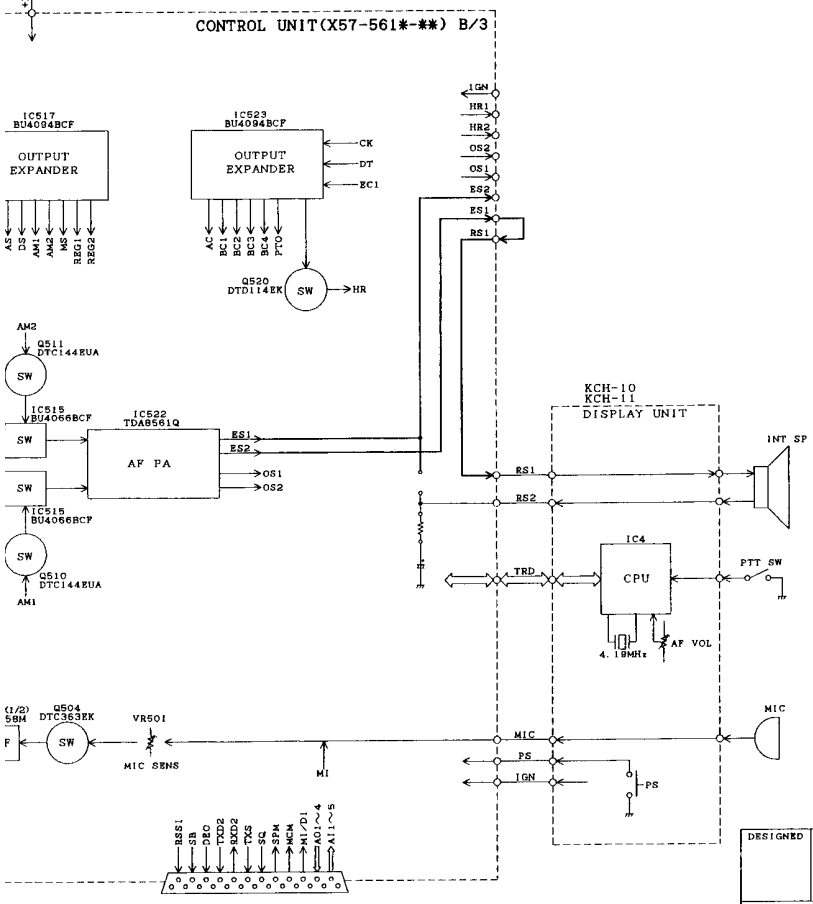

DESIGNED	DRAWN	CHECKED	APPROVED	PARTS NAME
				BLOCK DIAGRAM
				PARTS NUMBER TK-790

株式会社ケンウッド KENWOOD CORPORATION