CONFIDENTIAL

SONY

LOCALLY PROCURED PART	FOR SONY USE ONLY
COUNTRY OF ORIGIN (THAILAND)	LABEL TYPE AVC-UC-1-004

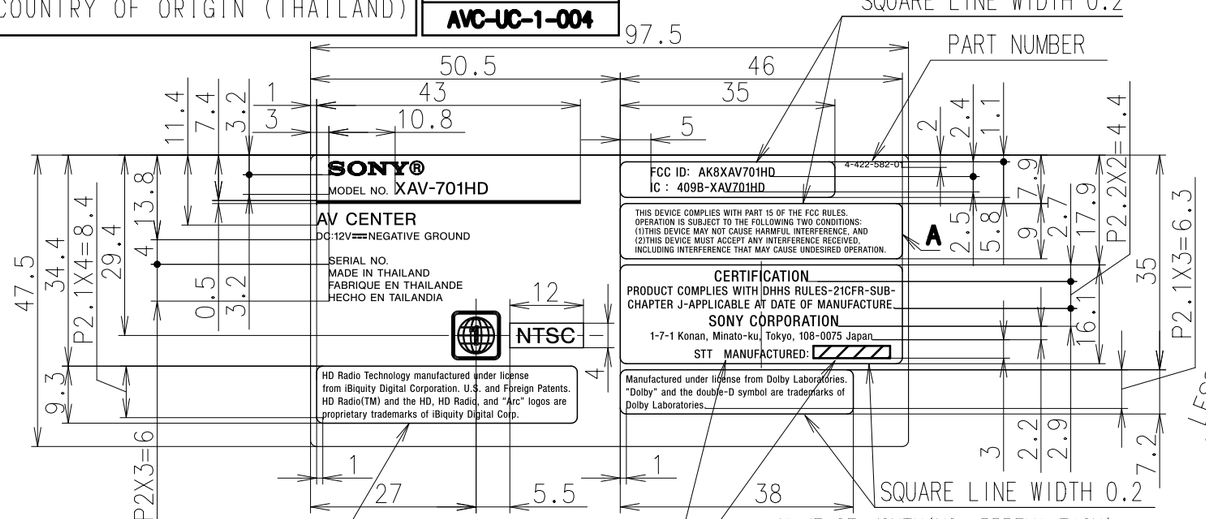

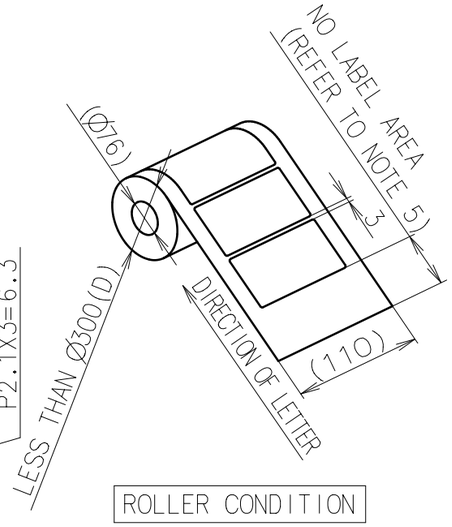

ROLLER CONDITION

INDICATION METHOD OF MANUFACTURING DATE

MANUFACTURED:NAME OF MONTH,YEAR(4DIGIT)

EXAMPLE

STT MANUFACTURED:June,2010

※REFER TO (C-4010-057-2) FOR DETAIL OF THE PRINT.

NAME OF MONTH(NO ABBREVIATION)

January	July
February	August
March	September
April	October
May	November
June	December

WRITTEN LETTERS	LETTER HEIGHT	TYPE FACE
SONY®	L=13	SONY LOGOTYPE WITH®SYMBOL(NO.2)
MODEL NO.	1.2	NEW SONY ID TYPE HR
XAV-701HD	2	
AV CENTER		
DC:12V~GROUND	1.2	
⎓	a=1.5	REFER TO DATA
SERIAL NO.	1.2	NEW SONY ID TYPE HR
MADE IN THAILAND		
FABRIQUE EN THAILANDE		
HECHO EN TAILANDIA		
	8	REFER TO DATA
NTSC	2.5	NEW SONY ID TYPE HR
HD Radio ~ Digital Corp.	1.2	NEW SONY ID TYPE HRC
4-422-582-01	1	NEW SONY ID TYPE HR
FCC ID: AK8XAV701HD	1.5	NEW SONY ID TYPE HRC
IC : 409B-XAV701HD		
THIS DEVICE~OPERATION.	1	
CERTIFICATION	1.8	
PRODUCT~MANUFACTURE.	1.4	
SONY CORPORATION	1.8	
1-7-1~Japan	1.3	
STT MANUFACTURED:	1.4	
MONTH,YEAR		
Manufactured under ~Laboratories.	1.2	
Serial Number	3	

MATERIAL CONSTRUCTION TABLE

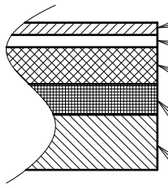

- POLYESTER FILM GLOSS FINISH t0.025 LAMINATE (REFER TO TABLE1)
- PRINTED SURFACE
- BASE MATERIAL (REFER TO TABLE1)
- ACRYLIC-BASE PRESSURE-SENSITIVE ADHESIVE (LINTEC CORP. PW OR EQUIVALENT)
- SILICONE-IMPREGNATED RELEASE PAPER

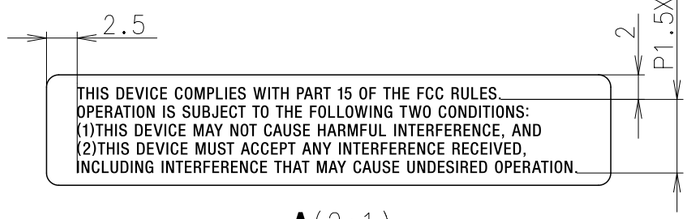

A(2:1)

QUALITY CHARACTERISTICS:ALL CHARACTERISTICS SPECIFIED IN CLAUSE 7 OF STM-1077 "SPECIFICATION LABELS-PARTS DESIGN STANDARDS" MUST BE SATISFIED.

NOTE 1) THE ADDED Serial Number IS TO BE DETERMINED UNDER INSTRUCTIONS FROM THE MATERIAL SECTION OF ORDERING FACTORY.

2) POSITION OF Serial Number(REFER TO RIGHT) TOLERANCE OF SIZE MUST BE±0.5.

3) DELIVERY SHALL BE IN ROLLED CONDITION.

4) UNLESS OTHERWISE SPECIFIED,ROUNDING SHALL BE R1.

5) NO LABEL AREA MUST BE LONG ENOUGH TO COVER OUTSIDE SURFACE OF THE ROLLER(πD).

6) BLOCK COPY PROVIDED FROM SONY SHOULD BE USED.

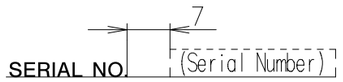

TABLE 1 : MATERIALS SPECIFICATION　　* RECOMMEND MATERIALS SPECIFICATION

ITEM	POLYESTER FILM		BASE MATERIAL		
	PRODUCT NAME	PARTNER	PRODUCT NAME		PARTNER
*1	PET25 NPL 6LK	LINTEC	WOOD FREE PAPER (70 g/m²)	HPL-W	THAI KK
*2	OPP LAMINATING TAPE OPAT	KK ENTERPRISE		SUPER VELLUM 70/ PP3C/ WG62	PMC
3	PET25 NPL 6LK	LINTEC	COATED PAPER (ART PAPER) (85 g/m²)	AW0269	AVERY
4	PET25 NPL 6LK	LINTEC		CAST PW8 8K	LINTEC
5	OPP LAMINATING TAPE OPAT	KK ENTERPRISE		MCL	PMC
6	OPP LAMINATING TAPE OPAT	KK ENTERPRISE		GLOSS COATED/ PP33C/ BG62	PMC

CHOOSE MATERIALS FROM THIS TABLE TO MAKE PART

Purchase recycled resins and wire rods only from the business partners that Sony approves as Green Partners.
再生樹脂・被覆電線はグリーンパートナー認定取引先から調達すること。
This part should not contain any substances which are specified in SS-00259-01.
この部品には SS-00259-01 に指定する物質を含んだ材料は、使用してはならない。

HISTORY X COUNT	SUFFIX REPL.	ECN-NO. DATE	REVISION	SIGN.
6 x				
5 x				
4 x				
3 x				
2 x				
1 x				

DRAWN BY	PLANNED BY	CHECKED BY	APPROVED BY
HES V&S '12.05.11 MORISHITA	HES V&S '12.05.11 MORISHITA	HES V&S3 '12.05.17 UCHIDA	HES V&S-3 '12.05.17 T.Tanabe

TENTATIVE

MODEL SJ-V061

PART NO. 0-417-158-01

UNIT mm	TOLERANCE	STS-3
	L≦ 4	±0.2
	4 <L≦ 16	±0.3
	16 <L≦ 63	±0.4
	63 <L≦ 250	±0.5
	250 <L≦ 400	±0.7
	400 <L≦ 1000	±1.5
	1000 <L≦ 2000	±3
	2000 <L≦ 4000	±4

ANGLE

SCALE 1 : 1

USED ON

RANK

FAMILY

ORIGINAL MODEL XAV-701HD//Q(UC)

MATERIAL(COLOR) (REFER TO ABOVE)

FINISH(COLOR) BASE:WHITE LETTER:BLACK

TITLE/DESCRIPTION

(E) LABEL,MODEL NUMBER(UC)

(J) LABEL,MODEL NUMBER(UC)

PART NO. ~~4-422-582-01~~

SHEET 1/1

THIS DOCUMENT IS THE PROPRIETARY PROPERTY OF SONY. ITS USE IS AUTHORIZED ONLY FOR RESPONDING TO A REQUEST FOR QUOTATION,OR FOR THE PERFORMANCE OF WORK FOR SONY. ALL QUESTIONS MUST BE REFERRED TO THE LOCAL PURCHASING DEPARTMENT OF SONY. THE REPRODUCTION, DISTRIBUTION AND UTILIZATION OF THIS DOCUMENT AS WELL AS THE COMMUNICATION OF ITS CONTENTS TO OTHERS WITHOUT EXPRESS AUTHORIZATION IS PROHIBITED. OFFENDERS WILL BE HELD LIABLE FOR THE PAYMENT OF DAMAGES. ALL RIGHTS RESERVED IN THE EVENT OF THE GRANT OF A PATENT, UTILITY MODEL OR DESIGN.COPYRIGHT RESERVED.

ISSUED '12.05.11

F spec - D32

DRAWING

SONY STANDARD

A3 '09.4

CATIA