Placement of Nameplate Label
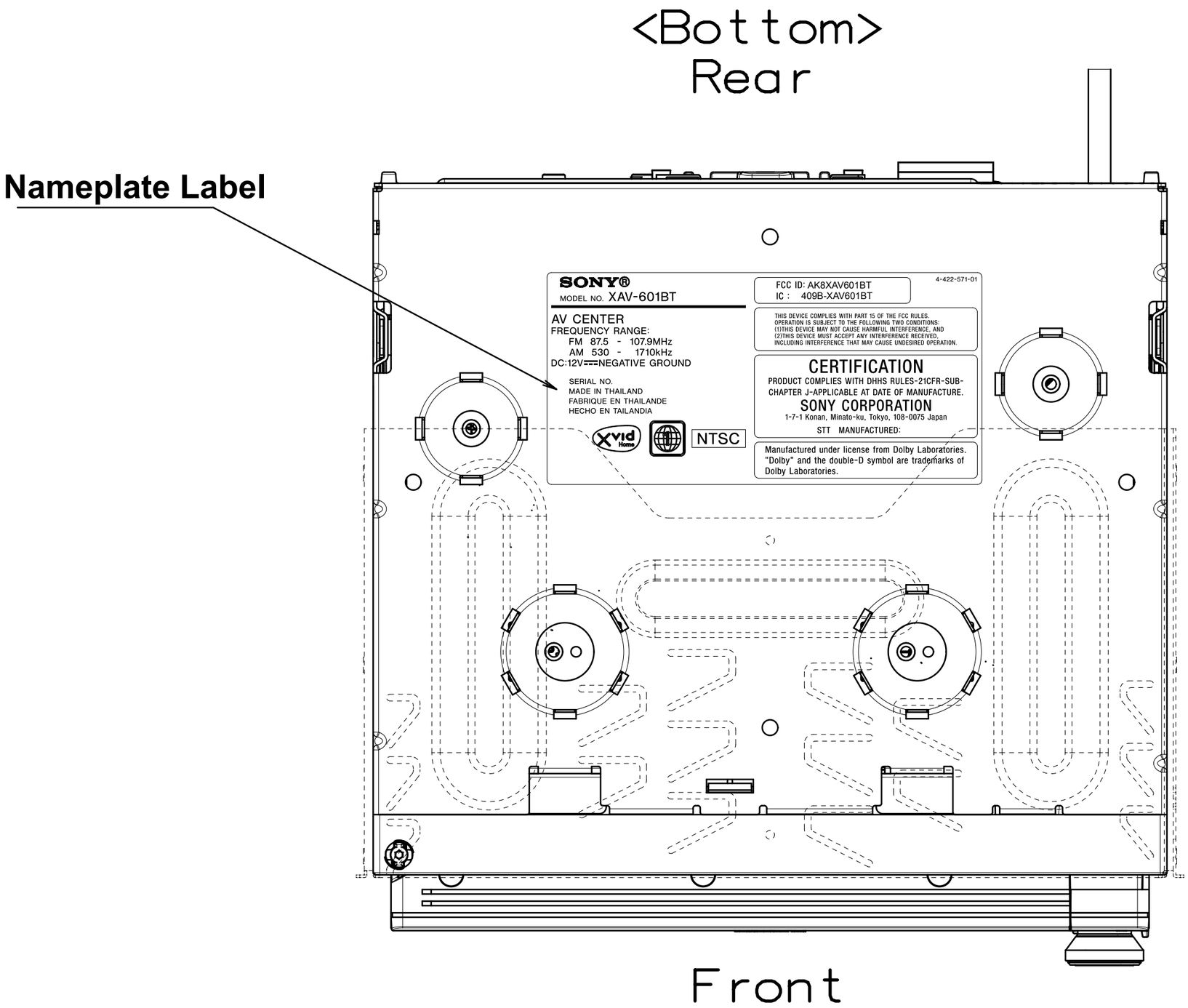
Model:XAV-601BT