Drawing size:A3

Sign	Date	change content	Engineer (signature)
	2021.04.06	New picture release	胡冬华

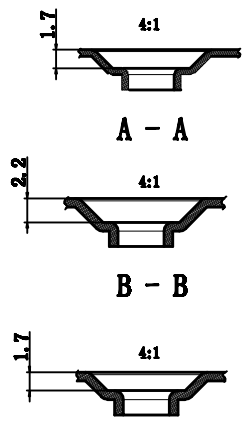

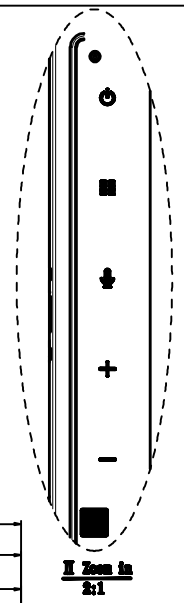

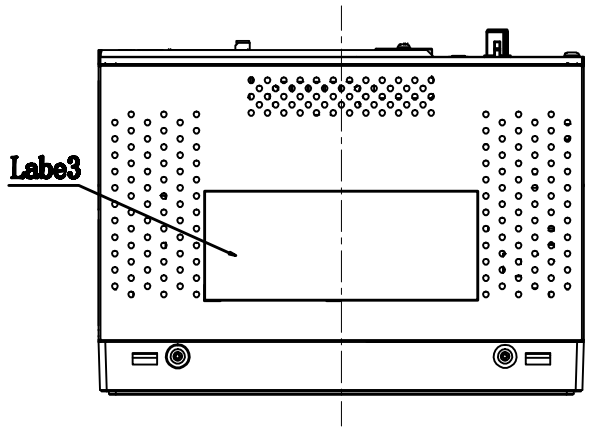

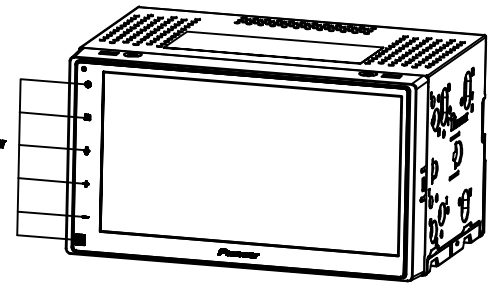

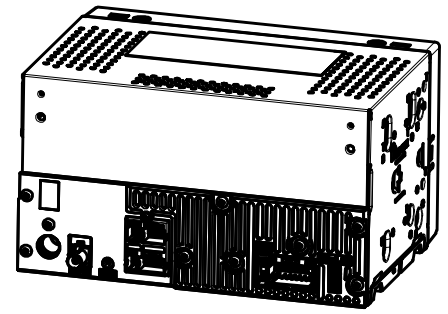

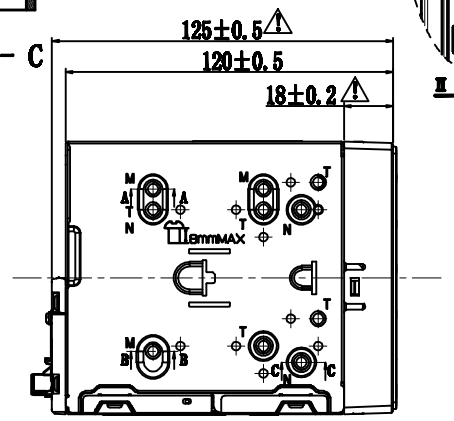

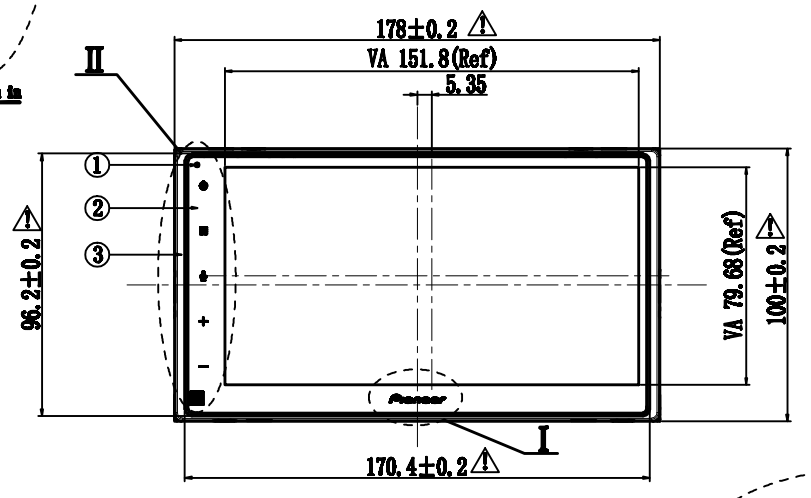

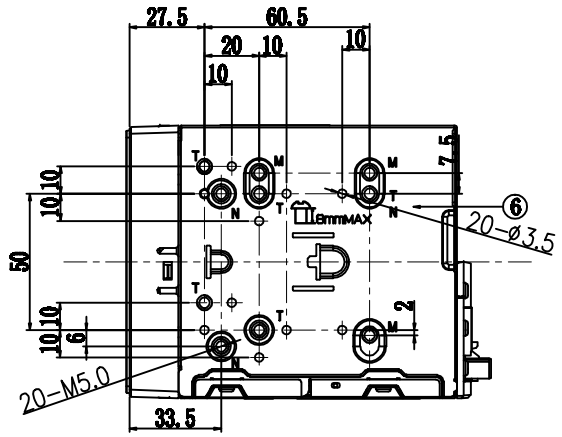

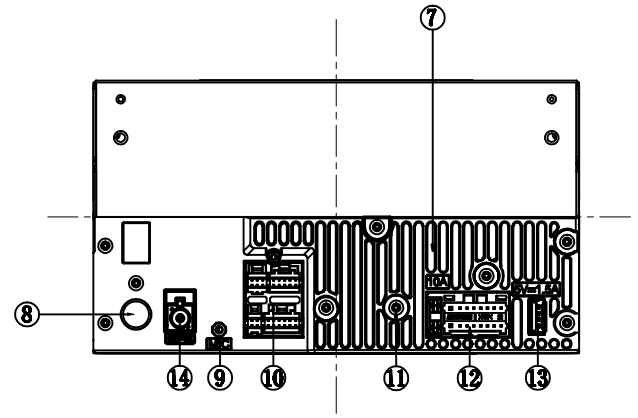

Technical Specifications:

1、Power supply: DC 10.8-15.1V;
2、Power output: THD10% 22W*4CH;
3、Speaker impedance: 4Ω;
4、Audio frequency segment:

North America	87.5MHz~107.9MHz (200k/step)	530kHz~1710kHz (10k/step)
Latin America	87.5MHz~107.9MHz (100k/step)	530kHz~1710kHz (10k/step)
Australia	87.5MHz~108.0MHz (100k/step)	522kHz~1710kHz (9k/step)
Russia	87.5MHz~108.0MHz (100k/step)	531kHz~1629kHz (9k/step)
Europe	87.5MHz~108.0MHz (50k/step)	522kHz~1620kHz (9k/step)
China	87.5MHz~108.0MHz (100k/step)	531kHz~1629kHz (9k/step)
Japan	76.0MHz~99.0MHz (100k/step)	522kHz~1629kHz (9k/step)

5、Static current: <3mA;
6、Working temperature: -10~60℃.

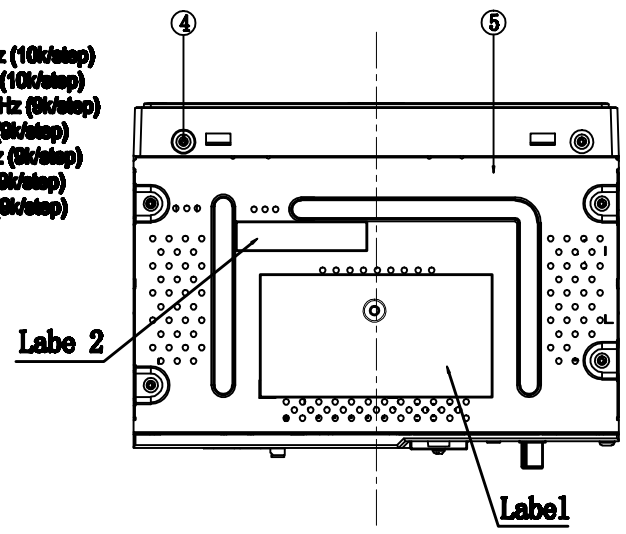

I Zoom in
4:1

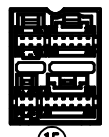

⑮ 32Pin small signal socket

PIN NO.	FUNCTION	PIN NO.	FUNCTION
A1	AUX-LIN	C1	CAMERA-CVBS GND
A2	AUX-RIN	C2	SWC-GND
A3	AUX-CVBS IN	C3	CAMERA-CVBS IN
A4	A&V GND	C4	SWC2
B1	CVBS-OUT	C5	MUTE
B2	NC	C6	SWC1
B3	CVBS-GND	D1	NC
B4	SUB WOOF GND	D2	NC
B5	SUB WOOF ROUT	D3	8XM-PWR EN
B6	SUB WOOF LOUT	D4	8XM-UART TXD
B7	RCA-RR OUT	D5	8XM-UART RXD
B8	RCA-RL OUT	D6	8XM-AGND
B9	RCA-RL&RR GND	D7	8XM-AUDIO RIN
B10	RCA-FR&FL GND	D8	8XM-AUDIO LIN
B11	RCA-FR OUT	D9	8XM-GND
B12	RCA-FL OUT	D10	8XM-POWER

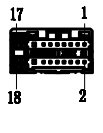

⑰ Power socket 2*9Pin

PIN NO.	FUNCTION	PIN NO.	FUNCTION
1	FL+	10	SPEED
2	FR+	11	ILL+
3	FL-	12	AMP_ON&ANT_POWER
4	FR-	13	ACC
5	RL+	14	REVERSE_GEAR
6	RR+	15	BATT+
7	RL-	16	GND
8	RR-	17	BATT+
9	PARKING_BRAKE	18	BATT+

NOTE:
1、Dimensions and tolerances according to the required level;
2、It's important size with ⚠, have to guarantee;
3、The external surface is smooth and has no defects such as scratches, darts, deformation, burrs, etc;
4、The relative position tolerance of all holes is ± 0.2, and the hole diameter is +0.1;
5、All unmarked dimensions are subject to the 3D drawing;
6、Comply with ROHS requirements.

TOLERANCE AREA / SIZE AREA	B A	B B	B C
UNDER 8MM	±0.05	±0.1	±0.1
8MM TO 30MM	±0.08	±0.1	±0.15
30MM TO 50MM	±0.12	±0.15	±0.2
50MM TO 80MM	±0.15	±0.2	±0.25
80MM TO 120MM	±0.2	±0.25	±0.35
120MM TO 200MM	±0.25	±0.35	±0.5
200MM TO 300MM	±0.35	±0.5	±0.65
300MM TO 500MM	±0.5	±0.65	±0.8

Stickers, films and others are subject to electronic documents!
It's not allowed to measure graphics directly as dimensions!!

Dimension unit: MM

signature	Date
Design:	
Check:	
Standard:	
Approve:	
File path::	

No.	Material coding	Material name	Material specifications	Quantity	Remarks
14	2401513000007	GPS Socket		1 PCS	
13	2401512000084	USB Socket		1 PCS	
12	2401502001169	Power Socket		1 PCS	
11	2490301000388	Screws	Flat round head screw 2.6*12mm Rosteel SWRCH22A machine flat tail blue zinc plated hardened	3 PCS	
10	2401502000195	Small signal Socket		1 PCS	
9	2401502001170	MIC Socket		1 PCS	
8	2401513000015	RADIO Socket		1 PCS	
7	2460101000152	Heat Sink	ADC12, Surface sandblasting	1 PCS	
6	2440101000545	U Chassis	SECC, T=0.8mm	1 PCS	
5	440101000544	Bottom Chassis	SECC, T=0.6mm	1 PCS	
4	2490304000021	Screw	2.0*6 BB blue zinc plated screw 2.0*6mm	20 PCS	
3	2410101000500	Front Panel	PC+ABS Highlight Black	1 PCS	
2	2401602000219	Touch screen	P+G, Capacitive touch screen	1 PCS	
1	2410601000311	RESET BUTTON	PC+ABS Highlight Black	1 PCS	

深圳徐港电子有限公司研发中心
SHEN ZHEN XUGANG ELECTRONIC CO., LTD R&D CENTER

Surface treatment	Material (color):	Model name:
Spray black oil	mixing	G7.17323A03B0
Proportion: 1:1	Quantity: 1 Set	Part Name: Host assembly
View:	client name: Pioneer	Drawing number: MD100-G7.17323-ZC001-V0
		Page 1/1 Version: A