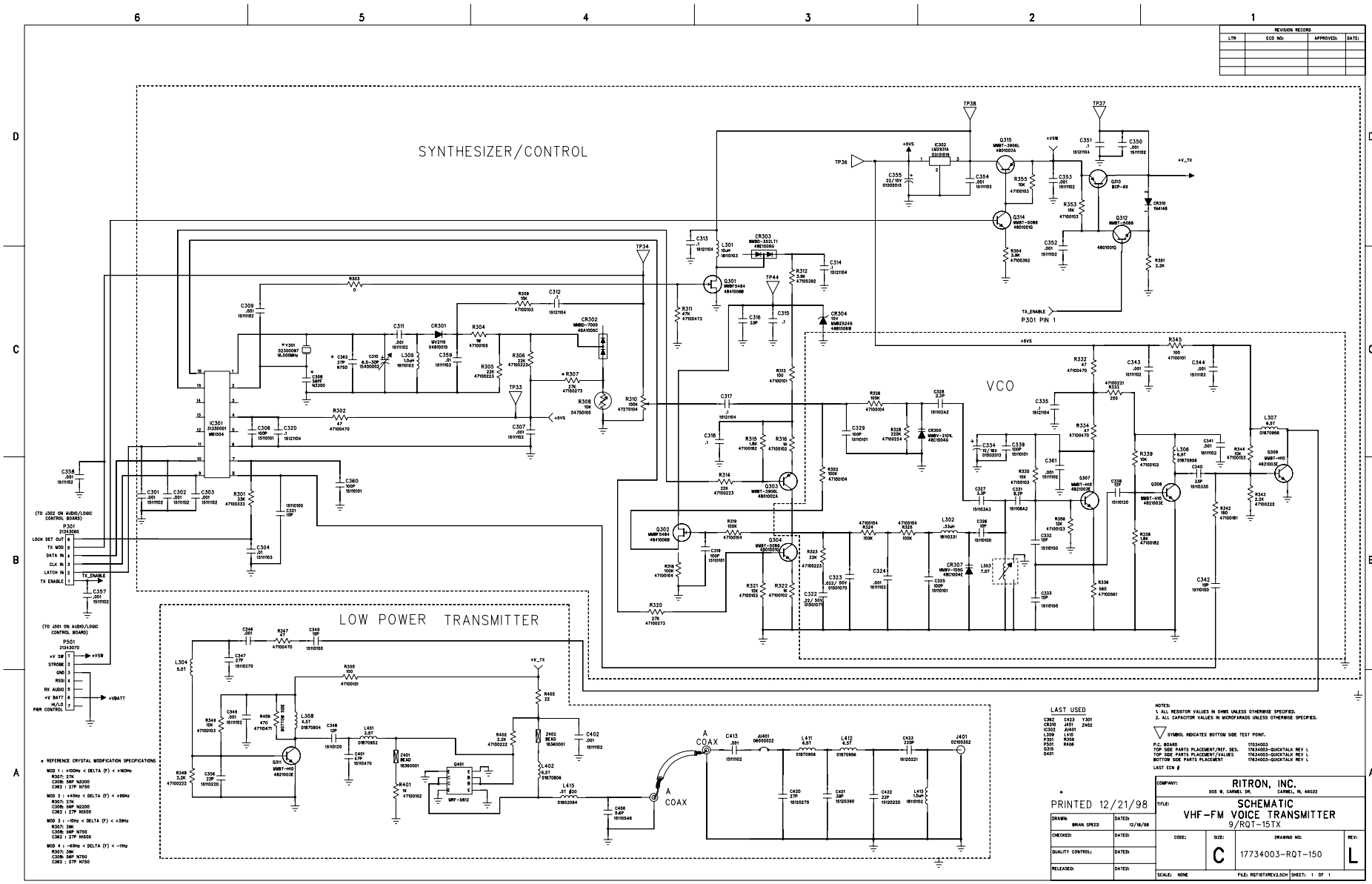

REVISION RECORD			
LTR	ECO NO:	APPROVED:	DATE:

LAST USED

C362 C423 Y301
CR310 J401 Z402
IC302 J402
L309 L415
P301 R356
P501 R406
Q315
Q401

NOTES:
1. ALL RESISTOR VALUES IN OHMS UNLESS OTHERWISE SPECIFIED.
2. ALL CAPACITOR VALUES IN MICROFARADS UNLESS OTHERWISE SPECIFIED.

▽ SYMBOL INDICATES BOTTOM SIDE TEST POINT.

P.C. BOARD	17734003
TOP SIDE PARTS PLACEMENT/REF. DES.	17634003-QUICKTALK REV L
TOP SIDE PARTS PLACEMENT/VALUES	17634003-QUICKTALK REV L
BOTTOM SIDE PARTS PLACEMENT	17634003-QUICKTALK REV L
LAST ECN #	

PRINTED 12/21/98

DRAWN: BRIAN SPEED	DATE: 12/18/98	COMPANY: RITRON, INC. 505 W. CARMEL DR. CARMEL, IN. 46032
CHECKED:	DATE:	TITLE: SCHEMATIC VHF-FM VOICE TRANSMITTER 9/RQT-15TX
QUALITY CONTROL:	DATE:	CODE: / SIZE: C / DRAWING NO: 17734003-RQT-150 / REV: L
RELEASED:	DATE:	SCALE: NONE / FILE: RQT15TXREV2.SCH / SHEET: 1 OF 1