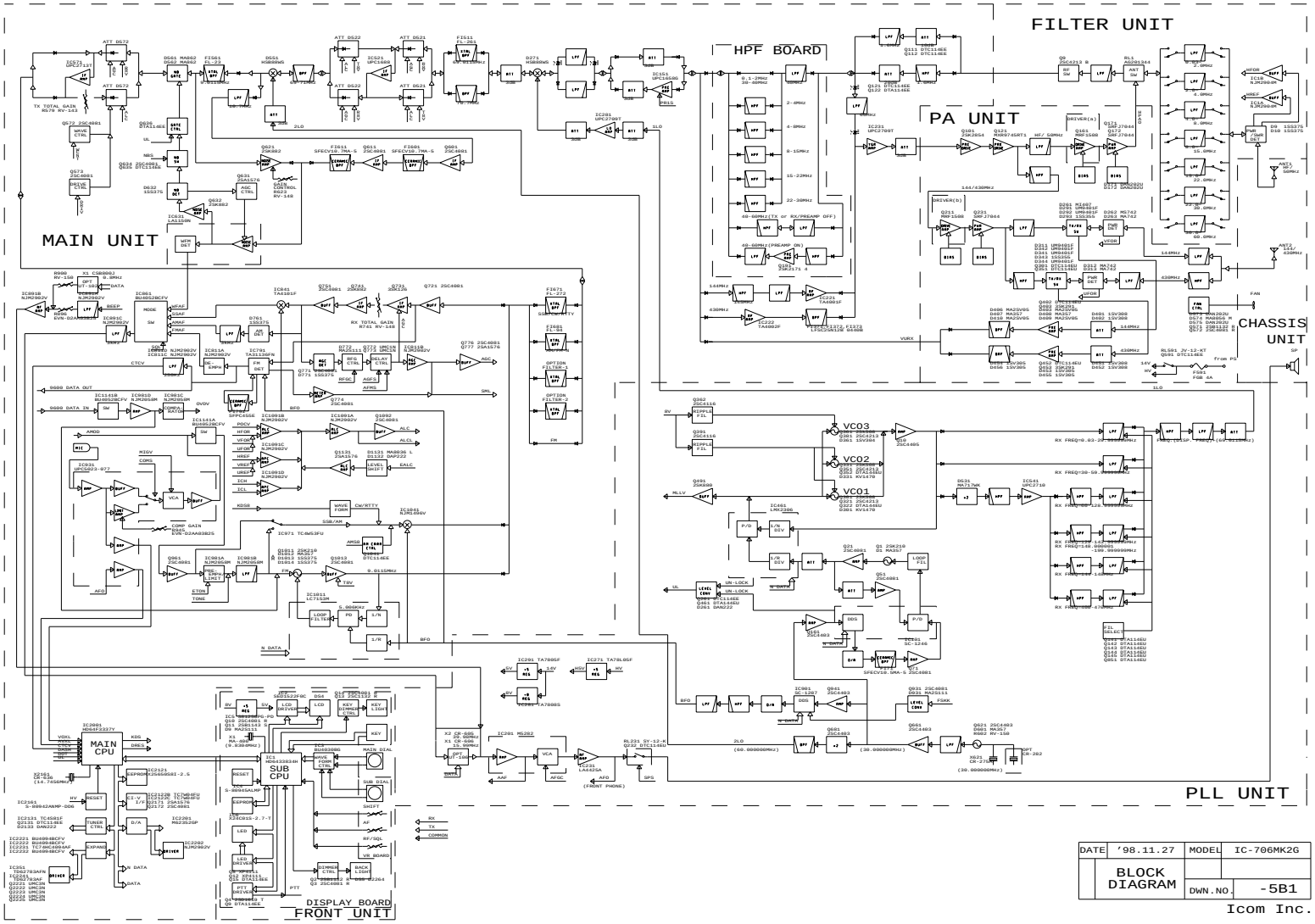

DATE	'98.11.27	MODEL	IC-706MK2G
	BLOCK DIAGRAM	DWN.NO.	-5B1

Icom Inc.