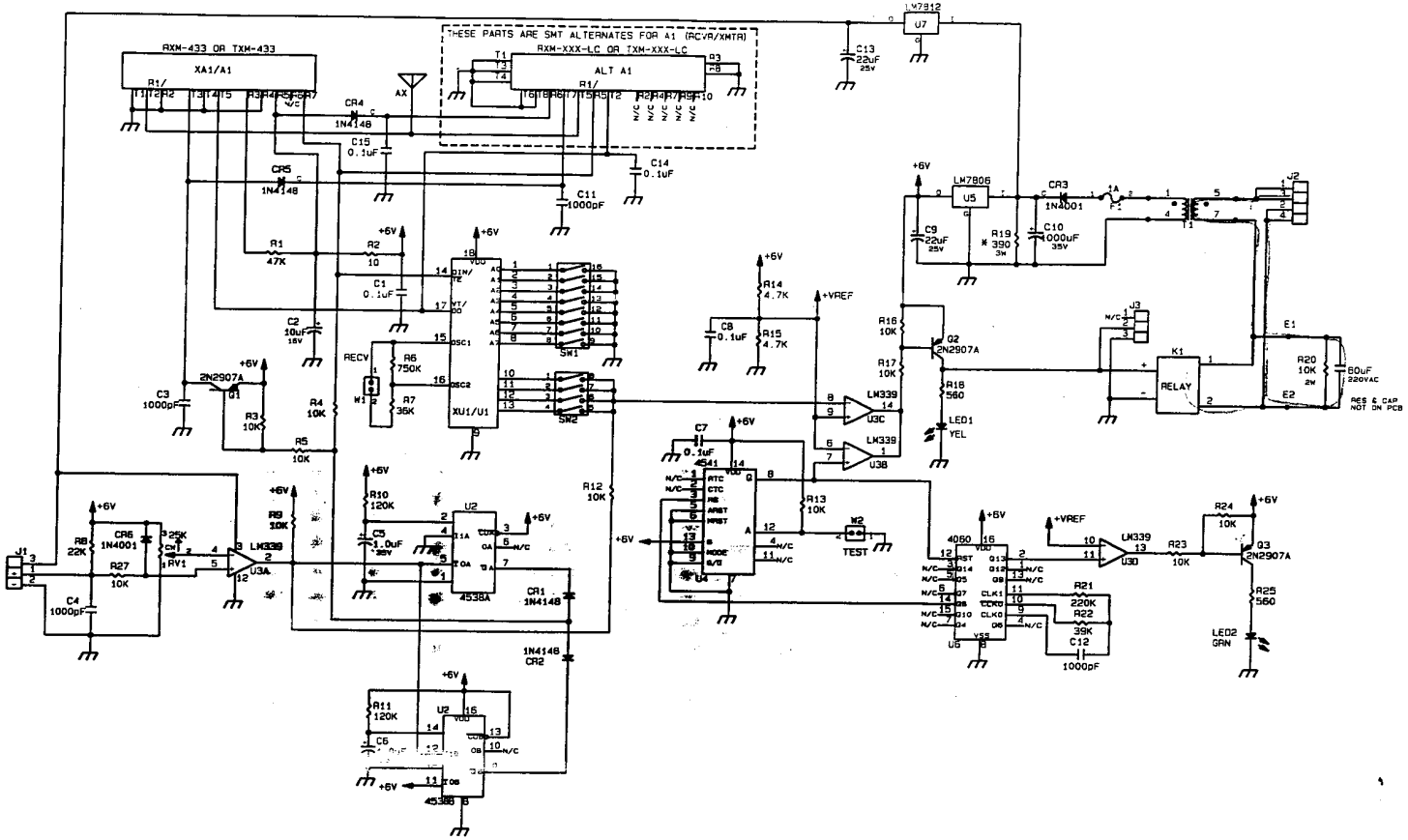

LAST USED	NOT USED
A1	
C15 CR6	
E2	
J3 K1	
Q3 R27	
SW2 T1	
U7 W2	

REVISIONS

REV	DESCRIPTION	DATE	APPROVED
3	CHG'D R7 VALUE, MADE R19 SELECTED	01/28/99	WMP

DRAWN: J. WELLEIN
CHECKED:
ISSUED:
CONTRACT:

MICROCOM DESIGN, INC.
10948C BEAVER DAM ROAD
HUNT VALLEY, MD 21030 410-771-1070

TITLE: LAMP DIMMER RCVR/XMTR SCHEMATIC

SIZE	CODE	NUMBER	REV
C		2410053	3

DATE DRAWN: 12/27/96 SHEET