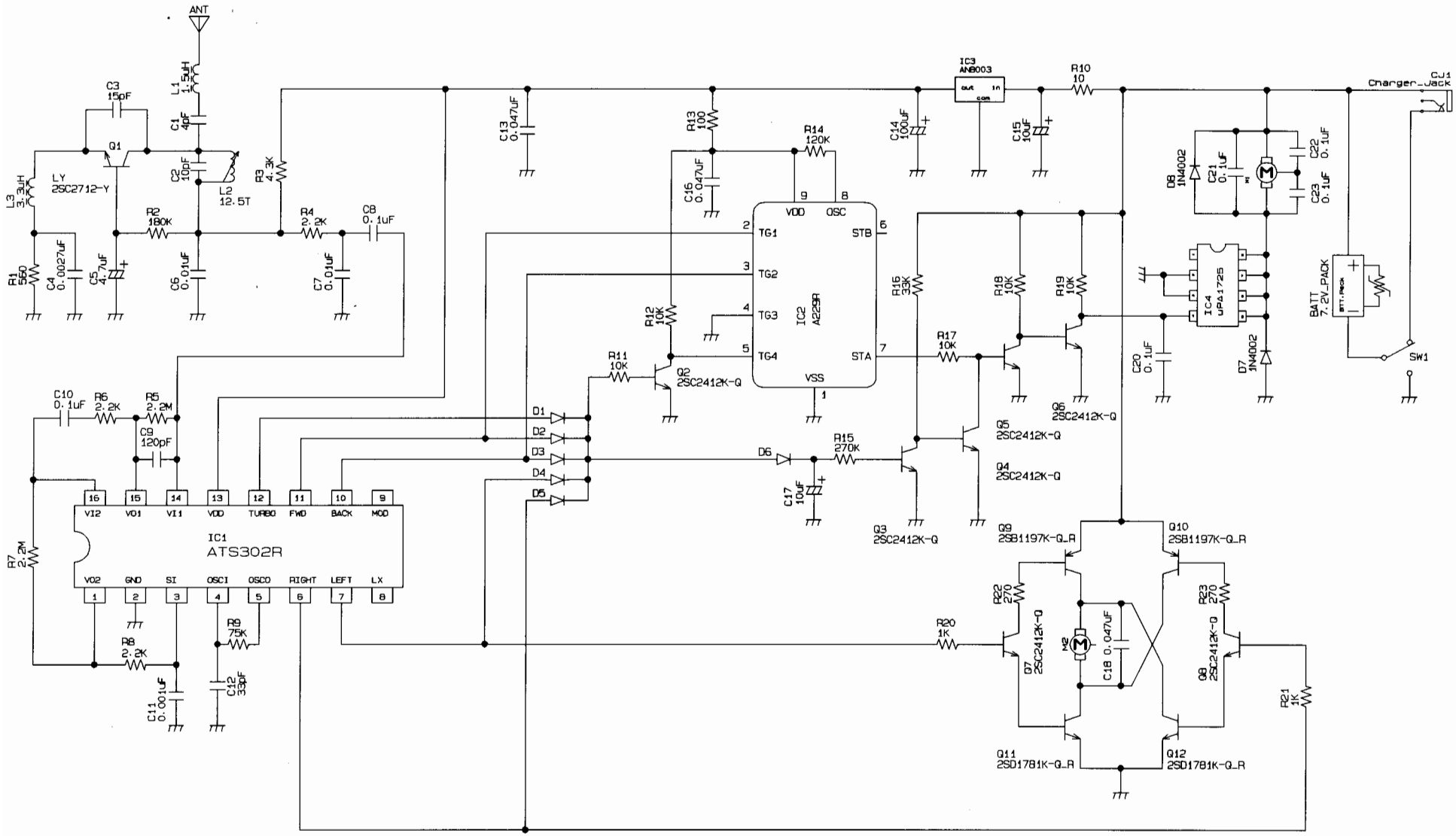

RECEIVER	
TY-D2327	49MHz
Drawing No. R1405	TAIYO KOGYO CO., LTD