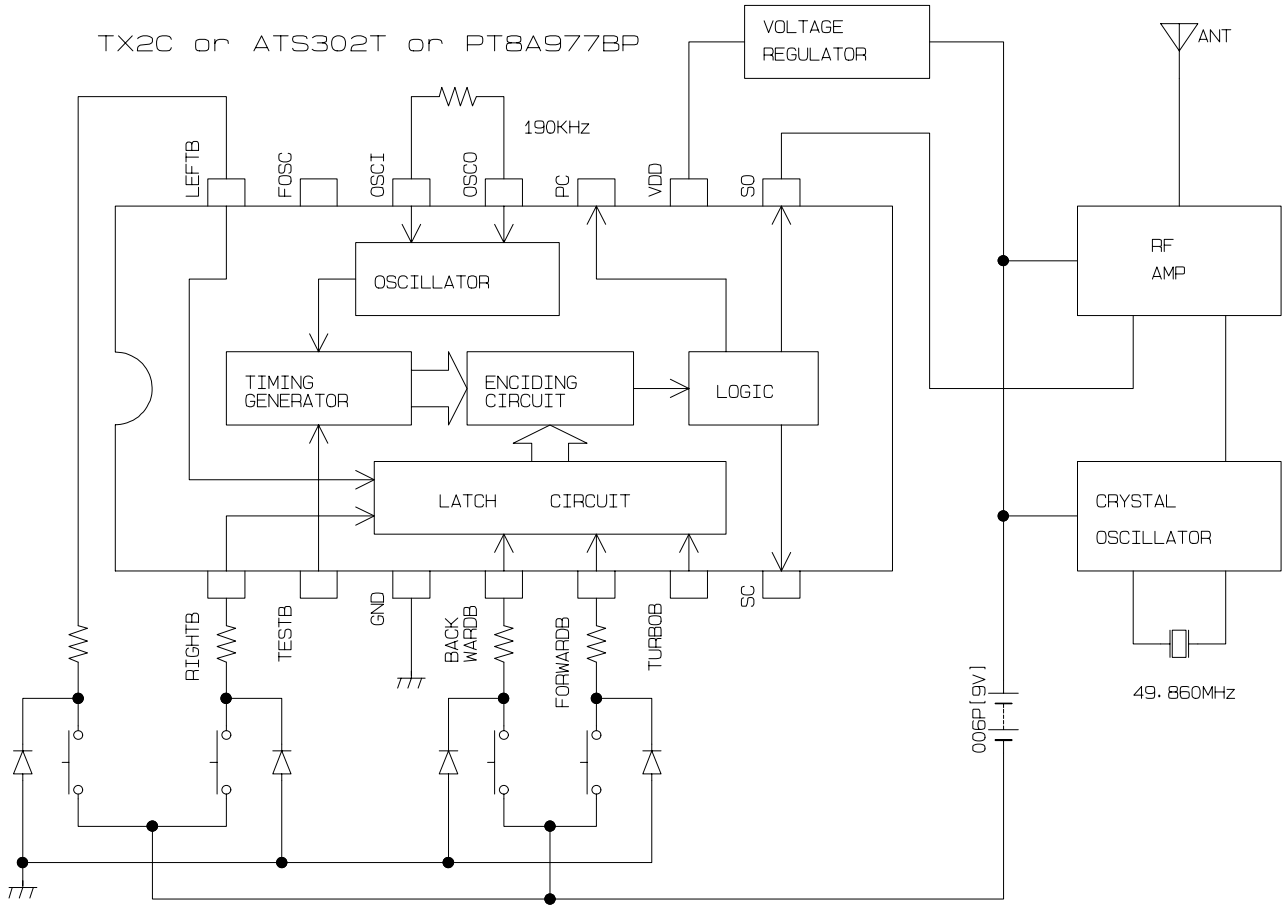

BLOCK DIAGRAM

TRANSMITTER TY-X1266

Drawing No.	TAIYO KOGYO CO., LTD