RECEIVER TY-X2260 49MHz

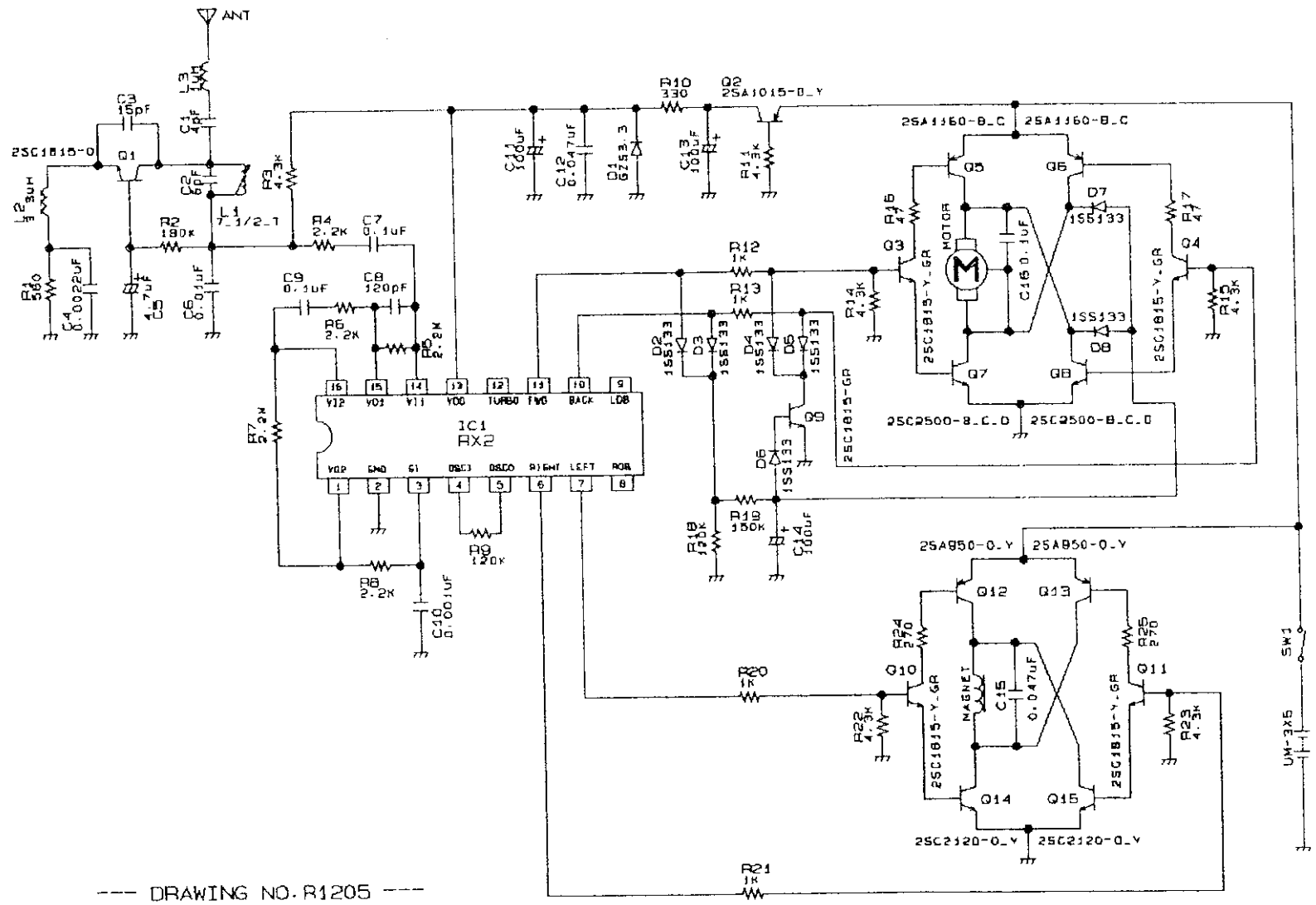

--- DRAWING NO. R1205 ---