Exhibit 4B
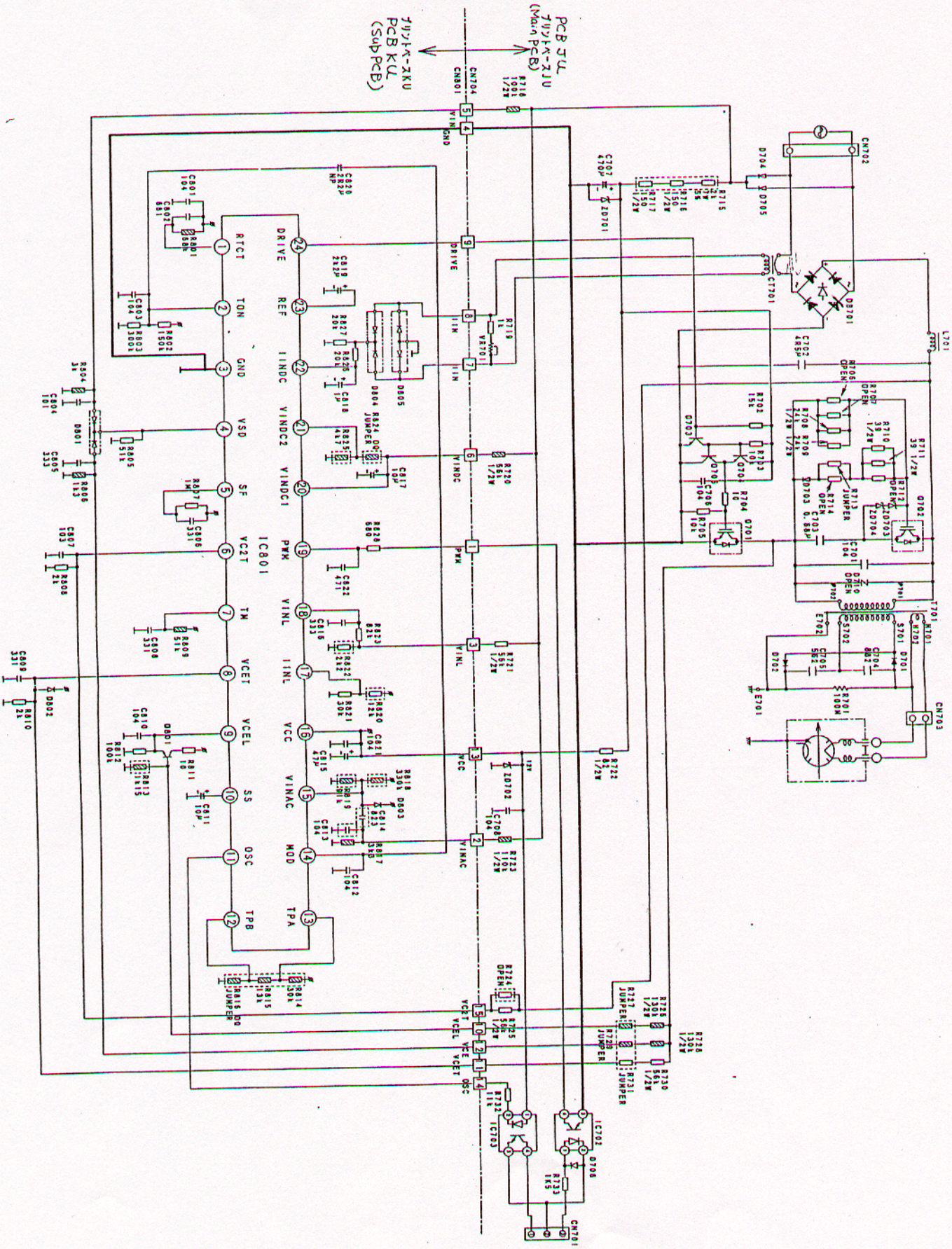
Inverter Power Supply Schematic