Confidential
Until:

Spec.	Sym.	Date	Revision	Signed	Checked

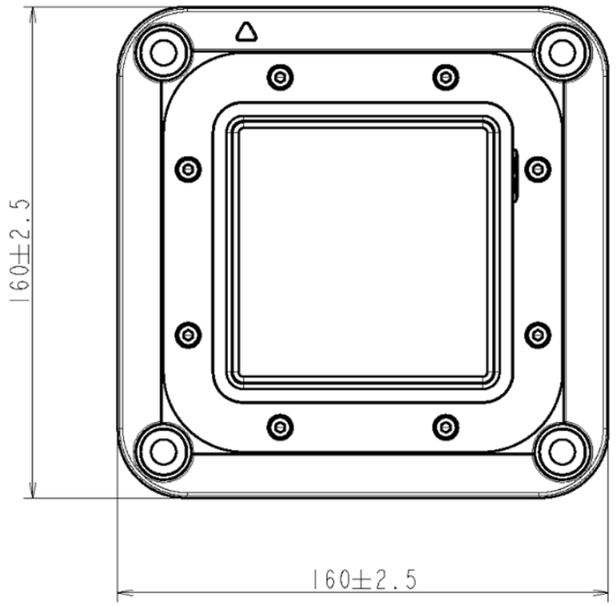

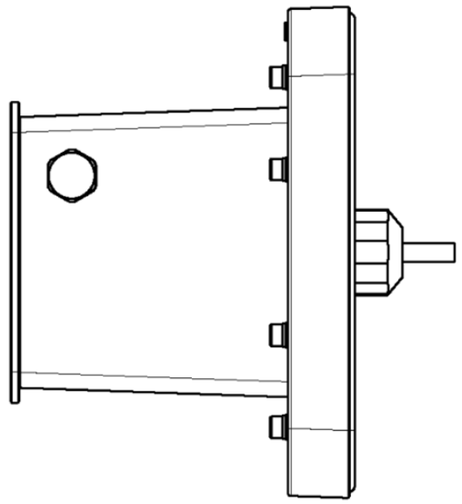

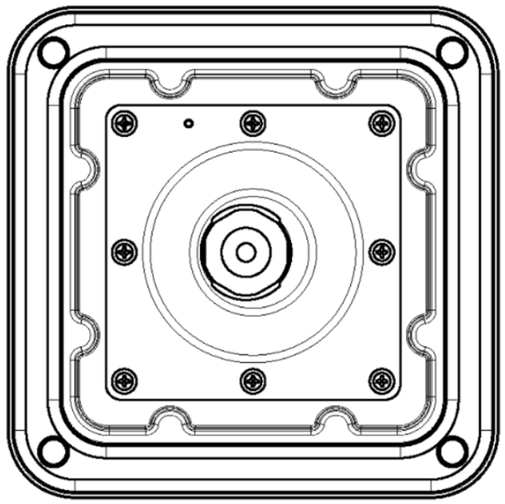

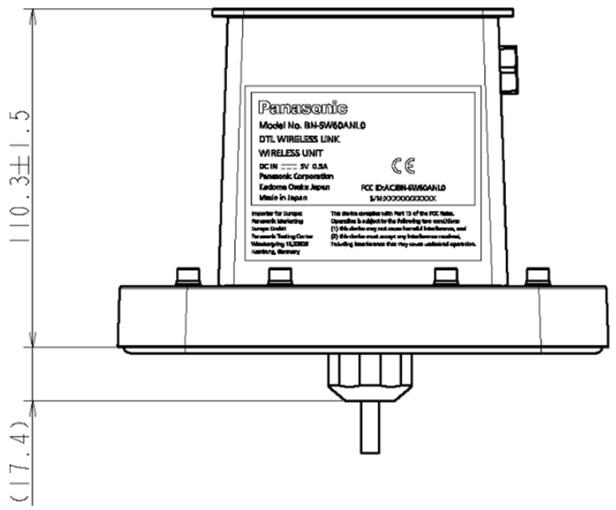

Sym.	Item or Code No.	Material & Size	qt.	Process	Remark

Scale	Designed	Drawn	Checked	Checked	Approved
:	Yamaguchi	Yamaguchi			Sakurai

Model	BN-SW60ANL0
Name	Overview
Part No.	

A3 Panasonic Corporation

3rd Angle System Unit:mm