Sym.	Date	Revision	Signed	Checked
1	@DATE	@comm		
2	@DATE	@comm		
3	@DATE	@comm		

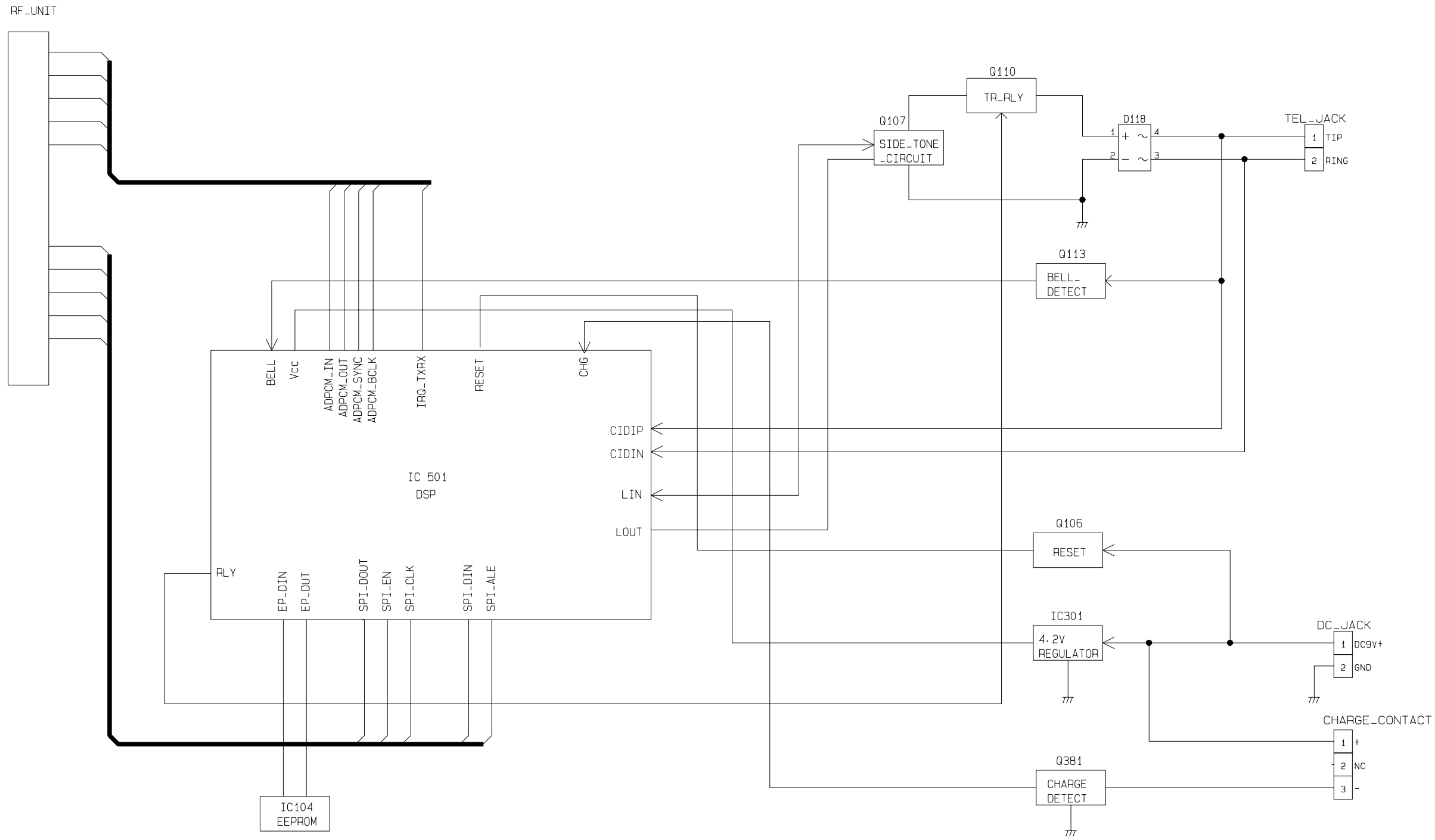

KYUSYU MATSUSHITA ELECTRIC CO., LTD
ENGINEERING DEPARTMENT. 4TH DIV.

Designed	Drawn	Checked	Appcoved	Rev.
				Code

Model	KX-TC1801/1851-B-H
Name	BASE UNIT
Name	BLOCK_DIAGRAM
Sheet	001.sht