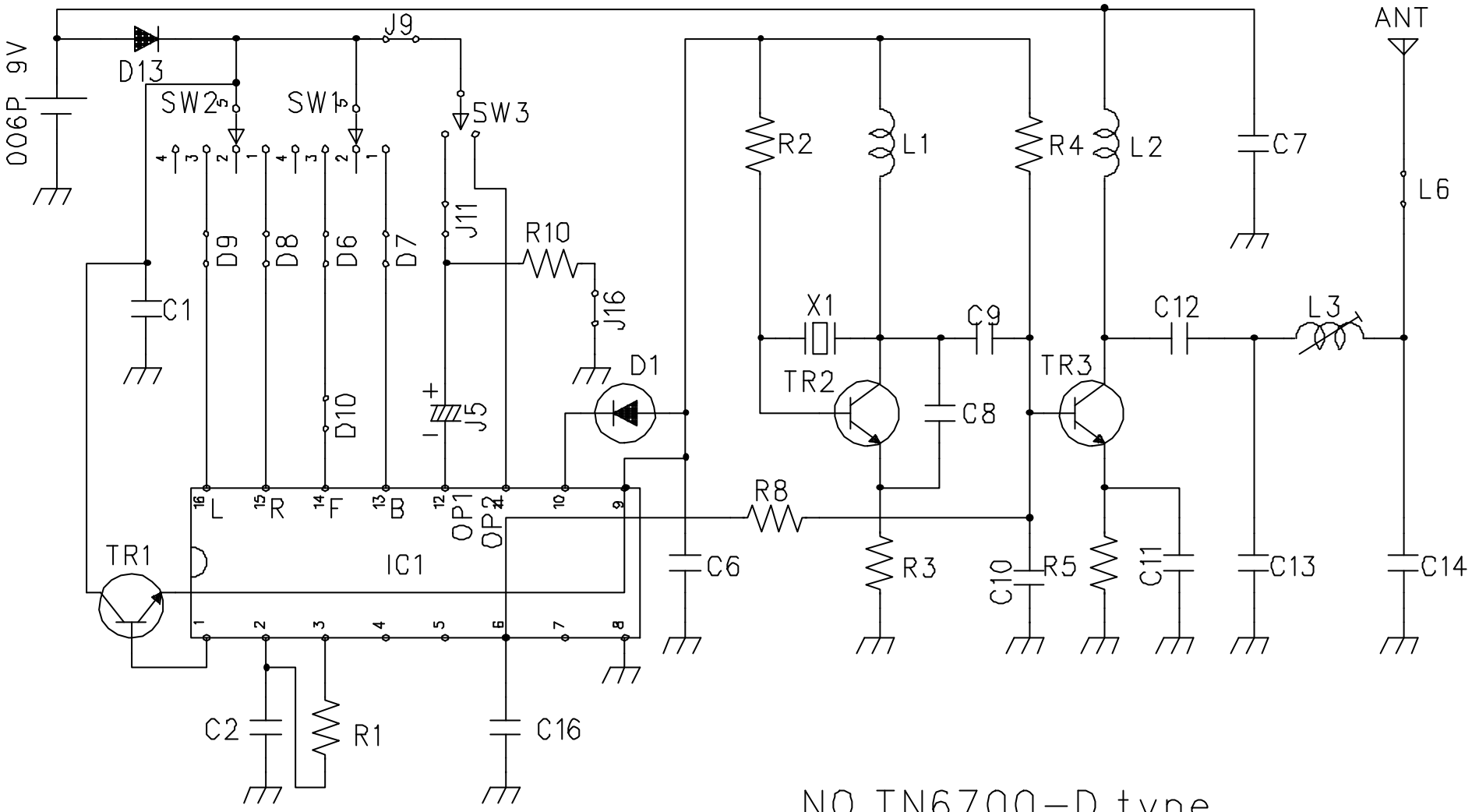

NO.TN6700-D.type
CIRCUIT DIAGRAM

FCC ID : AA06004329