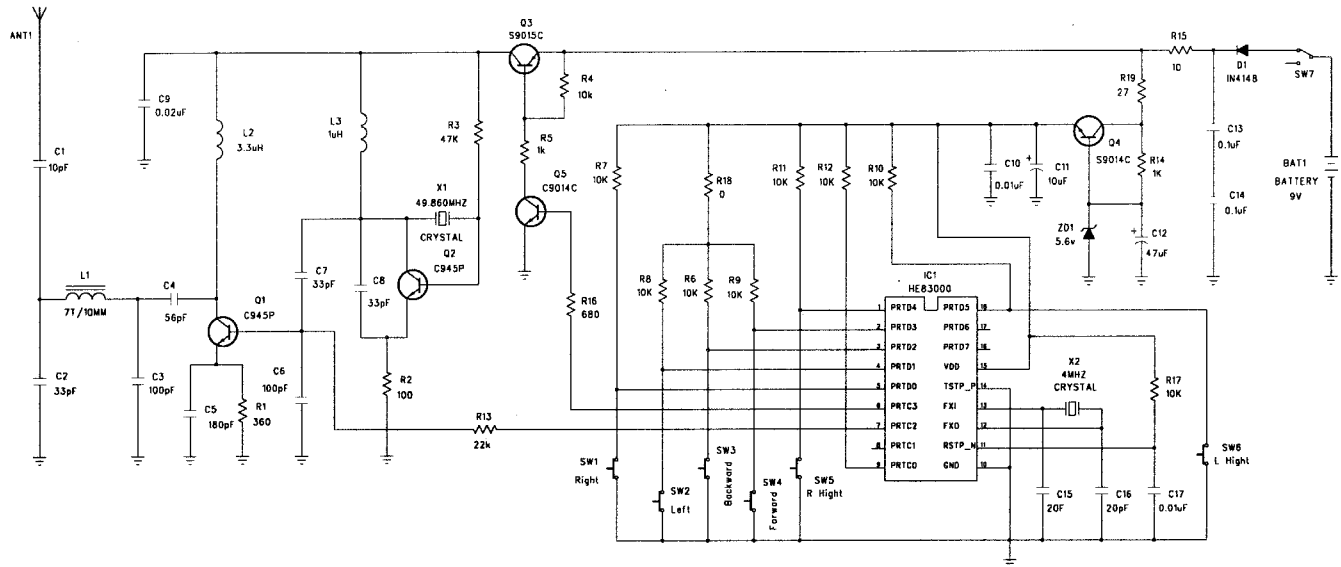

Notes: 1.Antenna is fixed

2.Transmitter is a portable unit

3.All value of resistances are in "ohm"

4.All value of capacitances are in "F"

REVISION RECORD			
LTR	ECO NO:	APPROVED:	DATE:

DRAWN: Jiang Li Zhang	DATED: 2001.06.15	COMPANY: Echo Toys Electronic LTD	
CHECKED: Jiang Li Zhang	DATED: 2001.06.15	TITLE: 4286-TX (49.860MHZ)	
QUALITY CONTROL:	DATED:	CODE: / SIZE: / DRAWING NO:	REV:
RELEASED:	DATED:	SCALE:	SHEET: OF