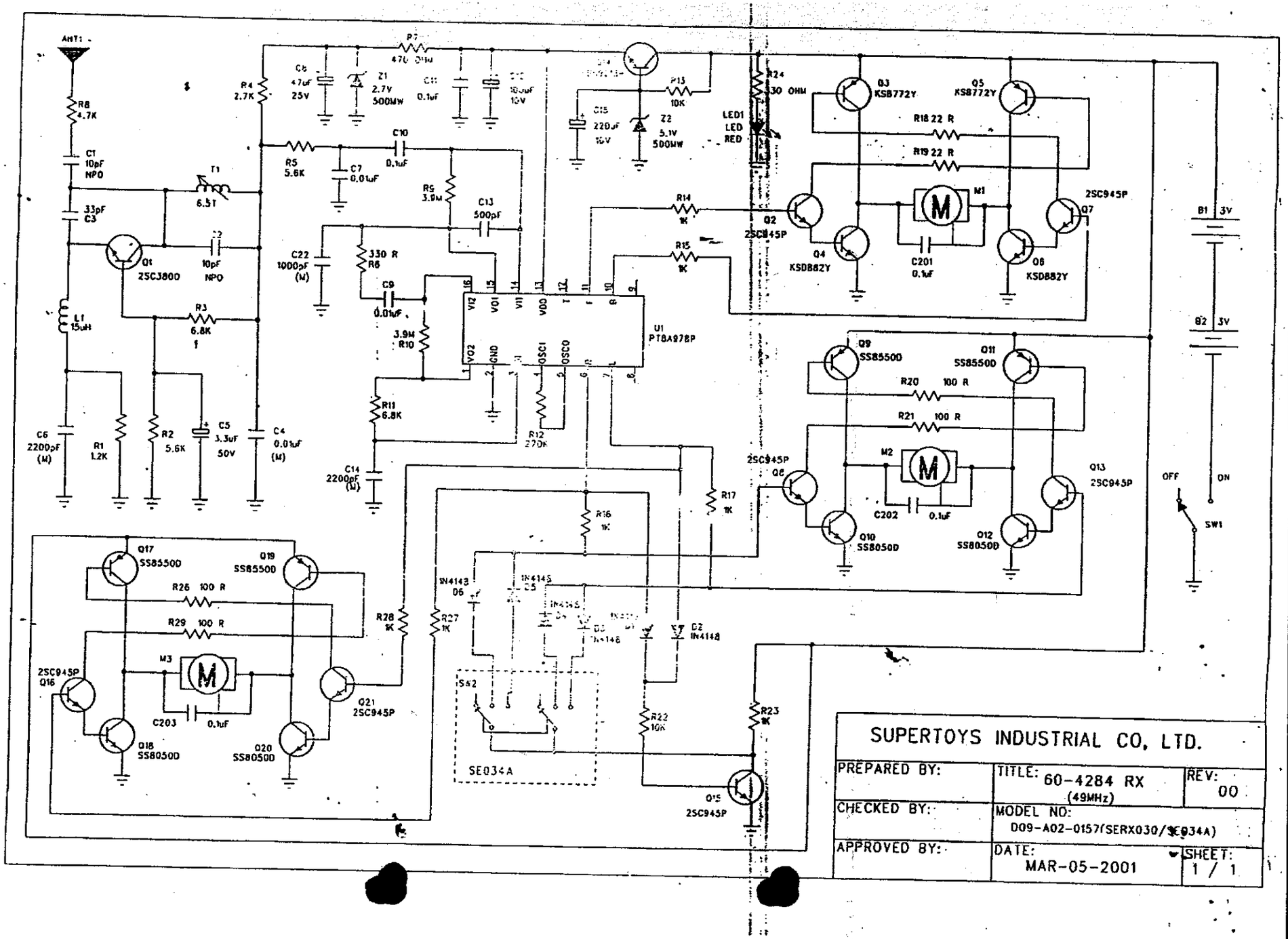


| SUPERTOYS INDUSTRIAL CO, LTD. | | |
|---|---|---|
| PREPARED BY: | TITLE: 60-4284 RX (49MHz) | REV: 00 |
| CHECKED BY: | MODEL NO: D09-A02-0157(SERX030/SE034A) | |
| APPROVED BY: | DATE: MAR-05-2001 | SHEET: 1 / 1 |