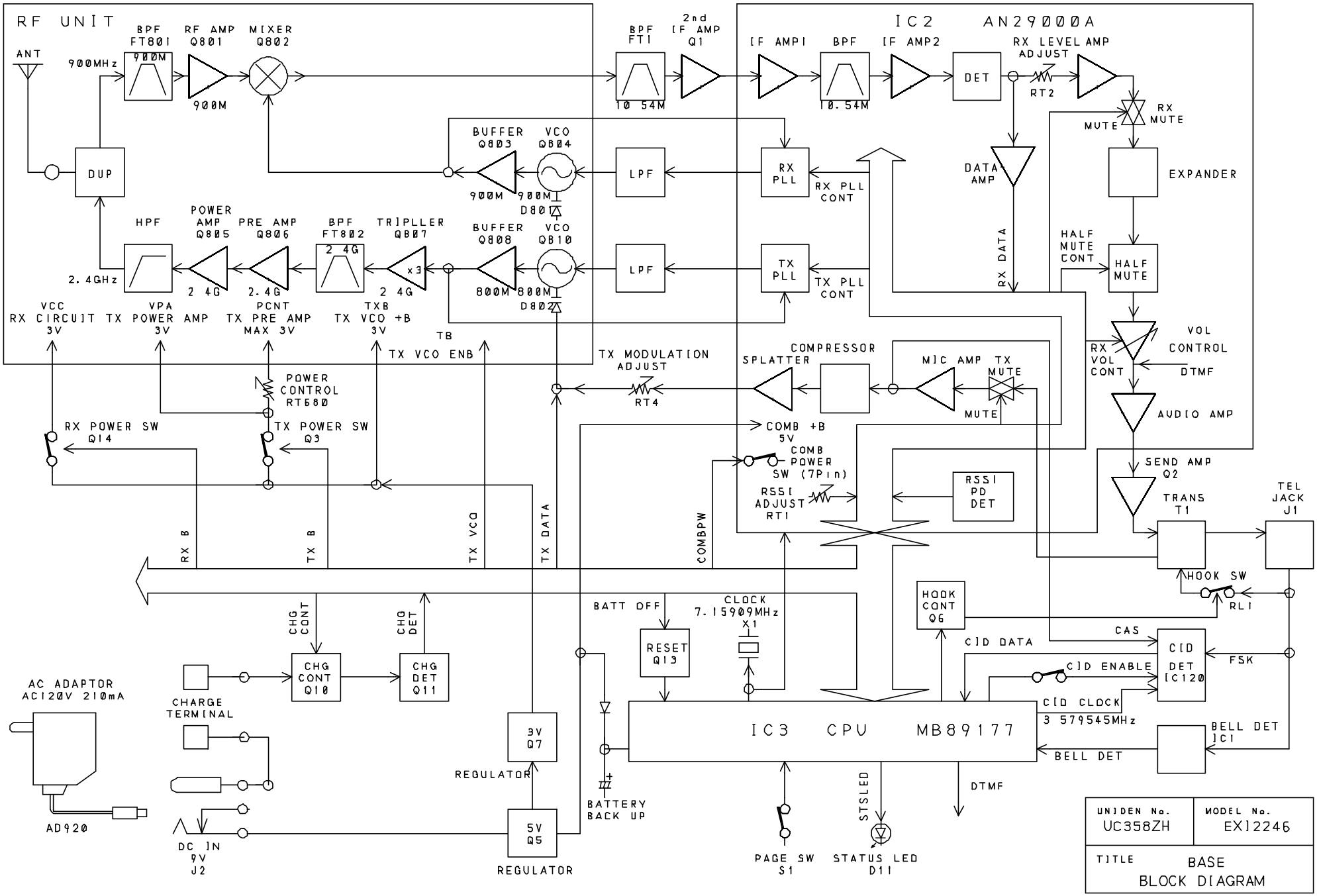

UNIDEN No.	MODEL No.
UC358ZH	EX12246

TITLE BASE BLOCK DIAGRAM