May 06, 2005

Tandy Electronics (China) Ltd.
6/F. & 7/F., M. C. Plaza,
9th Sub-District, Lian Tang Ind. Estate,
Shenzhen, Guangdong, China.

Dear Mr. Alex Lui,

Enclosed you will find your file copy of a Part 90 report (FCC ID: AAO3201257T).

For your reference, TCB will normally take another 15-20 days for reviewing the report. Approval will then be granted when no query is sorted.

Please contact me if you have any questions regarding the enclosed material.

Sincerely,

Billy Chow
Senior Supervisor

Enclosure

Tandy Electronics (China) Ltd.

Application
For
Certification
(FCC ID: AAO3201257T)

Wireless Microphone

0505526
TC/el
May 06, 2005

- The test results reported in this test report shall refer only to the sample actually tested and shall not refer or be deemed to refer to bulk from which such a sample may be said to have been obtained.
- This report shall not be reproduced except in full without prior authorization from Intertek Testing Services Hong Kong Limited
- For Terms And Conditions of the services, it can be provided upon request.
- The evaluation data of the report will be kept for 3 years from the date of issuance.

Intertek Testing Services Hong Kong Ltd.
2/F., Garment Centre, 576 Castle Peak Road, Kowloon, Hong Kong.
Tel: (852) 2173 8888 Fax: (852) 2785 5487 Website: www.hk.intertek-etlsemko.com

LIST OF EXHIBITS

INTRODUCTION

EXHIBIT 1:	General Description
EXHIBIT 2:	System Test Configuration
EXHIBIT 3:	RF Power Output
EXHIBIT 4:	Modulation Characteristics
EXHIBIT 5:	Occupied Bandwidth
EXHIBIT 6:	Spurious Emission
EXHIBIT 7:	Frequency Stability
EXHIBIT 8:	Technical Specifications
EXHIBIT 9:	Equipment Photographs
EXHIBIT 10:	Product Labelling
EXHIBIT 11:	Instruction Manual
EXHIBIT 12:	Tune Up Procedure
EXHIBIT 13:	Input Current

MEASUREMENT/TECHNICAL REPORT

Application : Tandy Electronics (China) Ltd.
Trade Name/Model No. : 32-1257
Date : May 06, 2005

This report concerns (check one:) Original Grant ___X___ Class II Change _____

Equipment Type: Wireless Microphone

Deferred grant requested per 47 CFR 0.457(d)(1)(ii)? Yes _____ No___X___

If yes, defer until: _____
date

Company Name agrees to notify the Commission by: _____
date

of the intended date of announcement of the product so that the grant can be issued on that date.

If no, assumed Part 90, Subpart K for Special Frequencies or Frequency Bands – the new 47 CFR [10-01-03 Edition] provision.

Report prepared by:

Billy Chow
Intertek Testing Services
2/F., Garment Centre,
576 Castle Peak Road,
Kowloon, Hong Kong.
Phone: 852-2173-8491
Fax: 852-2371-0914

TABLE OF CONTENTS

1.0 **General Description** 2
- 1.1 Product Description 2
- 1.2 Related Submittal(s) Grants 3
- 1.3 Test Methodology 3
- 1.4 Test Facility 3

2.0 **System Test Configuration** 5
- 2.1 Justification 5
- 2.2 EUT Exercising Software 6
- 2.3 Special Accessories 6
- 2.4 Measurement Uncertainly 6
- 2.5 Equipment Modification 6

3.0 **RF Power Output** 8

4.0 **Modulation Characteristics** 13
- 4.1 Modulation Frequency Response 14
- 4.2 Modulation Limiting Characteristics 17

5.0 **Occupied Bandwidth** 21

6.0 **Spurious Emission** 25
- 6.1 Field Strength of Spurious Radiation 26

7.0 **Frequency Stability** 30
- 7.1 Frequency Stability – Voltage 31
- 7.2 Frequency Stability – Temperature 34

8.0 **Technical Specifications** 38

9.0 **Equipment Photographs** 40

10.0 **Product Labelling** 42

11.0 **Instruction Manual** 44

12.0 **Tune Up Procedure** 46

13.0 **Input Current** 48

LIST OF ATTACHED FILE

Exhibit Type	File Description	Filename
Operation Description	Technical Description	descri.pdf
Test Report	Bandwidth Plot	bw.pdf
Test Report	Modulation Frequency Response	mfr.pdf
Test Report	Modulation Limiting Characteristic	mlc.pdf
Block Diagram	Block Diagram	block.pdf
Schematics	Circuit Diagram	circuit.pdf
ID Label/Location	Label Artwork and Location	label.pdf
User Manual	User Manual	manual.pdf
Test Report	Test Report	report.pdf
Test Setup Photo	Radiated Emission	radiated photos.pdf
Internal Photo	Internal Photo	internal photos.pdf
External Photo	External Photo	external photos.pdf
Test Report	Tune Up Procedure	tuneup.pdf

EXHIBIT 1

GENERAL DESCRIPTION

1.0 General Description

1.1 Product Description

This Equipment Under Test (EUT) is a three channels audio wireless FM microphone for its associated receiver. The primary function of the EUT is to modulate the audio signal to RF signal and then transmit the modulated signal. The operational frequencies are 169.505MHz, 170.245MHz and 171.905MHz respectively.

This EUT is powered by two new 1.5V “AA” size batteries and the power on red LED lights up (on top of the body) when the switch push to TALK position. Additional, a MUTE function button in front of the body in order to cut off the audio input signal.

For electronic filing, the brief circuit description is saved with filename: descri.pdf

1.2 Related Submittal(s) Grants

This is a single application for certification of a Wireless Microphone.

The certification procedure of receiver for this transmitter (with FCC ID: AAO3201257R) is being processed as the same time of this application.

1.3 Test Methodology

Radiated emission measurements were performed according to the procedures in ANSI C63.4 (2001) and ANSI/TIA/EIA-603-A-2001. Radiated Emission measurement was performed in Open Area Test Sites and Conducted Emission was performed in shield room. Preliminary scans were performed in the Open Area Test Sites only to determine worst case modes. For each scan, the procedure for maximizing emissions in Appendices D and E were followed. All Radiated tests were performed at an antenna to EUT distance of 3 meters, unless stated otherwise in the **"Justification Section"** of this Application.

1.4 Test Facility

The open area test site and conducted measurement facility used to collect the radiated data is located at Garment Centre, 576 Castle Peak Road, Kowloon, Hong Kong. This test facility and site measurement data have been placed on file with the FCC.

EXHIBIT 2

SYSTEM TEST CONFIGURATION

2.0 System Test Configuration

2.1 Justification

The device was configured for testing in a typical fashion (as a customer would normally use it), and in the confines as outlined in ANSI C63.4 (2001). The device was placed on a turntable, which enabled the engineer to maximize emissions through its placement in the three orthogonal axes.

For simplicity of testing, the device was operated transmitting continuously.

For maximizing emissions, the device was rotated through 360°, the antenna height was varied from 1 meter to 4 meters above the ground plane, and the antenna polarization was changed. The step by step procedure for maximizing emissions led to the data reported in Exhibit 3.0.

2.2 EUT Exercising Software

There was no special software to exercise the device. Once the unit is powered on, it transmits the typical signal continuously.

2.3 Special Accessories

There are no special accessories necessary for compliance of this product.

2.4 Measurement Uncertainly

When determining the test conclusion, the Measurement Uncertainly of test has been considered.

2.5 Equipment Modification

Any modifications installed previous to testing by Tandy Electronics (China) Ltd. will be incorporated in each production model sold/leased in the United States.

No modifications were installed by Intertek Testing Services.

Confirmed by:

Billy Chow
Senior Supervisor
Intertek Testing Services Hong Kong Ltd.
Agent for Tandy Electronics (China) Ltd.

_____ Signature

May 06, 2005 Date

EXHIBIT 3

RF POWER OUTPUT

3.0 RF Power Output

Testing Procedures

1. The EUT shall be placed at 1.5m heights on a turntable vertically.

2. The test antenna shall be oriented initially for vertical polarization location 3m from the EUT to correspond to the frequency of the transmitter.

3. The output of the test antenna shall be connected to measuring receiver and the quasi-peak detector is used for the measurement.

4. The transmitter shall be switch on, if possible, without modulation and the measuring receiver shall be turned to the frequency of the transmitter under test.

5. The test antenna shall be raised an lowered through the specified range of height until a maximum signal level is detected by the measuring receiver.

6. The transmitter shall then the rotated through 360° in the horizontal plane, until the maximum signal level is detected by the measuring receiver.

7. The test antenna shall be raised and lowered again through the specified range of height until a maximum signal level is detected by the measuring receiver.

8. The maximum signal level detected by the measuring receiver shall be noted.

9. The transmitter shall be replaced by a tuned dipole (substitution antenna).

10. The substitution antenna shall be orientated for vertical polarization and the length of the substitution antenna shall be adjusted to correspond to the frequency of the transmitter.

3.0 **RF Power Output (Cont'd)**

Testing Procedures

11. The substitution antenna shall be connected to a calibrated signal generator.

12. If necessary, the input attenuator setting of the measuring receiver shall be adjusted in order to increase the sensitivity of the measuring receiver.

13. The test antenna shall be raised and lowered through the specified range of height to ensure that the maximum signal is received.

14. The input signal to the substitution antenna shall be adjusted to the level that produces a level detected by the measuring received, that is equal to the level note input attenuator setting of the measuring receiver.

15. The input level to the substitution antenna shall be recorded as power level in dBm, corrected for any change of input attenuator setting of the measuring receiver.

16. The measurement shall be repeated with the test antenna and the substitution antenna orientated for horizontal polarization.

17. The measure of the effective radiated power is the larger of the two levels recorded, at the input to the substitution antenna, corrected for gain of the substitution antenna if necessary.

18. Repeat above test procedures with the EUT placed horizontally.

Table 1

Tandy Electronics (China) Ltd.
32-1257

Transmission Power
Pursuant to FCC Section 90.265(b)(2)

Assigned Frequency (MHz)	Measured Frequency (MHz)	Measured Power (mW)	Limit (mW)	Margin (mW)
169.505	169.505	1.3713	50	–48.6287

Note: Negative sign in the column shows value below limit.

Test Engineer: Terry C. H. Chan

Date of Test: April 06, 2005

Table 2

Tandy Electronics (China) Ltd.
32-1257

Transmission Power
Pursuant to FCC Section 90.265(b)(2)

Assigned Frequency (MHz)	Measured Frequency (MHz)	Measured Power (mW)	Limit (mW)	Margin (mW)
171.905	171.905	0.9060	50	–49.0940

Note: Negative sign in the column shows value below limit.

Test Engineer: Terry C. H. Chan Date of Test: April 06, 2005

EXHIBIT 4

MODULATION CHARACTERISTICS

4.0 Modulation Characteristics

In order to satisfy the FCC Section 2.1047(a) and 2.1047(b) requirement, Modulation Frequency Response and Modulation Limiting Characteristics are attached in Exhibit 4.1 & 4.2.

Plots for each tests are saved with filename: mfr.pdf and mlc.pdf

4.1 Modulation Frequency Response

Testing Procedures

1. Set-up the test equipment in the following configuration:

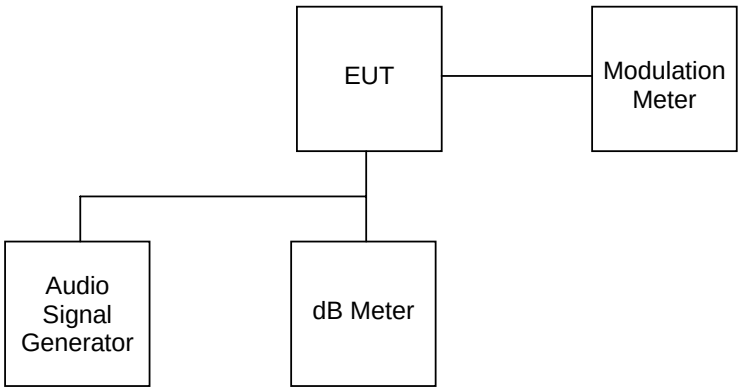

2. Set the audio signal generator frequency to the sound pressure level 97.0dBSPL at the microphone of the EUT.

3. The frequency of the audio signal generator is changed from 100Hz to 5kHz.

4. Record the frequency deviation.

Table 3

Tandy Electronics (China) Ltd.
32-1257

Modulation Frequency Response
Pursuant to FCC Section 2.1047(a)

Assigned Frequency: 169.505MHz

Modulation Frequency (Hz)	Frequency Deviation (kHz)	Modulation Index
100	9.6	96.00
200	8.4	42.00
300	8.4	28.00
400	8.4	21.00
500	8.3	16.60
600	8.2	13.67
700	7.9	11.29
800	7.9	9.88
900	7.7	8.56
1000	7.7	7.70
1500	7.6	5.07
2000	7.7	3.85
2500	7.3	2.92
3000	7.2	2.40
3500	7.0	2.00
4000	7.0	1.75
4500	7.0	1.56
5000	7.0	1.40

Test Engineer: Terry C. H. Chan Date of Test: April 06, 2005

Table 4

Tandy Electronics (China) Ltd.
32-1257

Modulation Frequency Response
Pursuant to FCC Section 2.1047(a)

Assigned Frequency: 171.905MHz

Modulation Frequency (Hz)	Frequency Deviation (kHz)	Modulation Index
100	9.7	97.00
200	8.5	42.50
300	8.2	27.33
400	8.0	20.00
500	7.9	15.80
600	7.9	13.17
700	7.8	11.14
800	7.8	9.75
900	7.7	8.56
1000	7.6	7.60
1500	7.5	5.00
2000	7.5	3.75
2500	7.4	2.96
3000	7.5	2.50
3500	7.5	2.14
4000	7.6	1.90
4500	7.5	1.67
5000	7.5	1.50

Test Engineer: Terry C. H. Chan Date of Test: April 06, 2005

4.2 Modulation Limiting Characteristics

Testing Procedures

1. Set-up the test equipment in the following configuration:

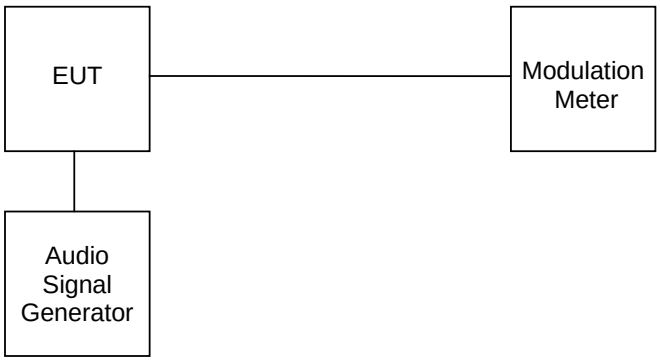

2. Set the frequency of the audio signal generator to 500Hz and adjust the level from 67dBSPL to 127dBSPL. Record the output modulation index.

3. Record the maximum value of plus or minus peak frequency deviation.

4. Repeat the above procedure with frequency 500Hz, 1000Hz, 2500Hz and 5000Hz.

Table 5

Tandy Electronics (China) Ltd.
32-1257

Modulation Limiting Characteristics
Pursuant to FCC Section 2.1047(b)

Assigned Frequency: 169.505MHz

Modulation Input (dBSPL)	Peak Frequency Deviation (kHz)			
	at 500Hz	at 1000Hz	at 2500Hz	at 5000Hz
67	3.4	2.7	3.3	3.5
77	5.3	4.9	5.3	4.7
87	7.0	6.6	6.8	6.5
97	8.3	7.7	7.3	7.0
107	7.2	7.2	7.0	7.1
117	7.0	7.0	7.0	7.0
127	No response	No response	No response	No response

Note: No response if input level > 117dBSPL.

Test Engineer: Terry C. H. Chan Date of Test: April 06, 2005

Table 6

Tandy Electronics (China) Ltd.
32-1257

Modulation Limiting Characteristics
Pursuant to FCC Section 2.1047(b)

Assigned Frequency: 171.905MHz

Modulation Input (dBSPL)	Peak Frequency Deviation (kHz)			
	at 500Hz	at 1000Hz	at 2500Hz	at 5000Hz
67	2.3	2.6	2.8	4.4
77	4.0	3.6	3.6	6.4
87	6.2	6.0	6.0	7.2
97	7.9	7.6	7.4	7.5
107	8.3	8.3	8.4	8.0
117	7.9	7.7	7.7	7.7
127	No response	No response	No response	No response

Note: No response if input level > 117dBSPL.

Test Engineer: Terry C. H. Chan Date of Test: April 06, 2005

EXHIBIT 5

OCCUPIED BANDWIDTH

5.0 Occupied Bandwidth

Testing Procedures

1. Set-up the test equipment in the following configuration:

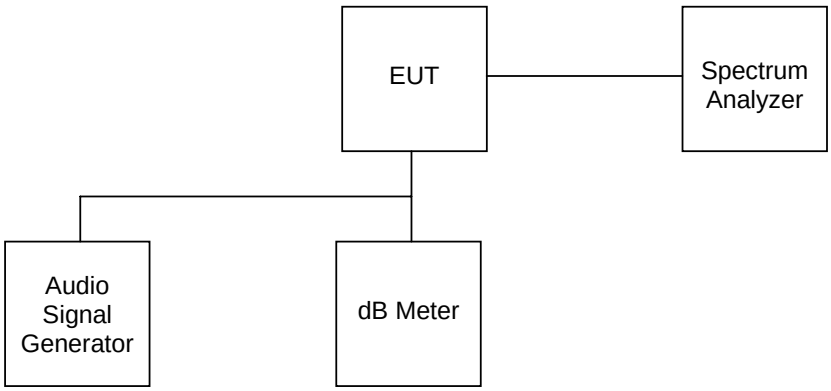

2. Other than single side band or independent sideband transmitters when modulated by a 2500Hz one at an input level 16dB greater than that necessary to produce 50 percent modulation. The input level shall be established at the frequency of maximum response of the audio modulation circuit.

3. The occupied bandwidth is measured with the spectrum analyzer set at 5kHz/div scan and 10dB/div.

4. The emission bandwidth shall not exceed the limit 54kHz.

5. The measured occupied bandwidth is 15.50kHz and 16.38kHz for carrier frequency of 169.505MHz and 171.905MHz respectively.

For electronic filing, the bandwidth plot is saved with filename: bw.pdf

Table 7

Tandy Electronics (China) Ltd.
32-1257

Occupied Bandwidth
Pursuant to FCC Section 2.1049(c)(1) & 90.210(b)

Assigned Carrier Frequency: 169.505MHz

Mask Region	Attenuation from Unmodulated Carrier Emissions		
	Measured Result (dB)	Calculated Limit (dB)	Results
Carrier + 13.5kHz	–56.13	0	Pass
Carrier – 13.5kHz	–49.87	0	Pass
Carrier + 27.0kHz	–63.27	–25	Pass
Carrier – 27.0kHz	–63.57	–25	Pass
Carrier + 54.0kHz	–65.25	–35	Pass
Carrier – 54.0kHz	–65.43	–35	Pass

Test Engineer: Terry C. H. Chan Date of Test: April 06, 2005

Table 8

Tandy Electronics (China) Ltd.
32-1257

Occupied Bandwidth
Pursuant to FCC Section 2.1049(c)(1) & 90.210(b)

Assigned Carrier Frequency: 171.905MHz

Mask Region	Attenuation from Unmodulated Carrier Emissions		
	Measured Result (dB)	Calculated Limit (dB)	Results
Carrier + 13.5kHz	–53.24	0	Pass
Carrier – 13.5kHz	–47.62	0	Pass
Carrier + 27.0kHz	–58.71	–25	Pass
Carrier – 27.0kHz	–58.48	–25	Pass
Carrier + 54.0kHz	–66.23	–35	Pass
Carrier – 54.0kHz	–65.90	–35	Pass

Test Engineer: Terry C. H. Chan Date of Test: April 06, 2005

EXHIBIT 6

SPURIOUS EMISSION

6.0 Spurious Emission

In order to satisfy the requirement, the spurious emission from the EUT are measured and shown in the Exhibit 6.1.

6.1 Field Strength of Spurious Radiation

Testing Procedures

Radiated emission measurements were performed according to the procedures in ANSI C63.4 (2001). All measurements were performed in Open Area Test Sites located at Roof Top of Garment Centre, 576 Castle Peak Road, Kowloon, Hong Kong.

For electronic filing, the radiated emission configurations photograph is saved with filename: radiated photos.pdf

Table 9

Tandy Electronics (China) Ltd.
32-1257

Field Strength of Spurious Radiated
Pursuant to FCC Section 2.1053(a)

Assigned Frequency: 169.505MHz

Polarization	Frequency (MHz)	Net at 3m (dBuV/m)	Limit at 3m (dBuV/m)	Margin (dB)
V	339.010	43.7	82.2	–38.5
V	508.515	44.7	82.2	–37.5
V	678.020	41.9	82.2	–40.3
V	847.525	41.1	82.2	–41.1
V	1017.031	41.9	82.2	–40.3
V	1186.535	38.4	82.2	–43.8
V	1356.042	38.1	82.2	–44.1
V	1525.545	37.2	82.2	–45.0
V	1695.051	37.0	82.2	–45.2

Notes:
1. Quasi-peak data for emission below 1000MHz.
2. Negative sign in margin column shows the value below the limit.
3. Any emissions and any other harmonics which are attenuated more than 20dB below the permissible value need not be recorded.
4. Horn antenna and average detector is used for emission over 1000MHz.

$*$ Calculated limit = $10 \log_{10} (TP(W)) - 43 - 10 \log_{10} (TP)$
= –43dBW
= 82.2dBμV/m at 3m

Test Engineer: Terry C. H. Chan Date of Test: April 06, 2005

Table 10

Tandy Electronics (China) Ltd.
32-1257

Field Strength of Spurious Radiated
Pursuant to FCC Section 2.1053(a)

Assigned Frequency:171.905MHz

Polarization	Frequency (MHz)	Net at 3m (dBuV/m)	Limit at 3m (dBuV/m)	Margin (dB)
V	343.816	44.9	82.2	–37.3
V	515.720	49.7	82.2	–32.5
V	687.627	48.1	82.2	–34.1
V	859.510	42.9	82.2	–39.3
V	1031.422	42.8	82.2	–39.4
V	1203.326	37.9	82.2	–44.3
V	1375.233	37.1	82.2	–45.1
V	1547.137	37.0	82.2	–45.2
V	1719.047	36.9	82.2	–45.3

Notes: 1. Quasi-peak data for emission below 1000MHz.

5. Negative sign in margin column shows the value below the limit.

6. Any emissions and any other harmonics which are attenuated more than 20dB below the permissible value need not be recorded.

7. Horn antenna and average detector is used for emission over 1000MHz.

∗ Calculated limit = $10 \log_{10} (TP(W)) - 43 - 10 \log_{10} (TP)$
= –43dBW
= 82.2dBμV/m at 3m

Test Engineer: Terry C. H. Chan Date of Test: April 06, 2005

EXHIBIT 7

FREQUENCY STABILITY

7.0 Frequency Stability

The frequency tolerance was tested in normal condition and over extreme ambient conditions with respect to voltage and temperature variation.

7.1 Frequency Stability – Voltage

Testing Procedures

1. Set-up the test equipment in the following configuration:

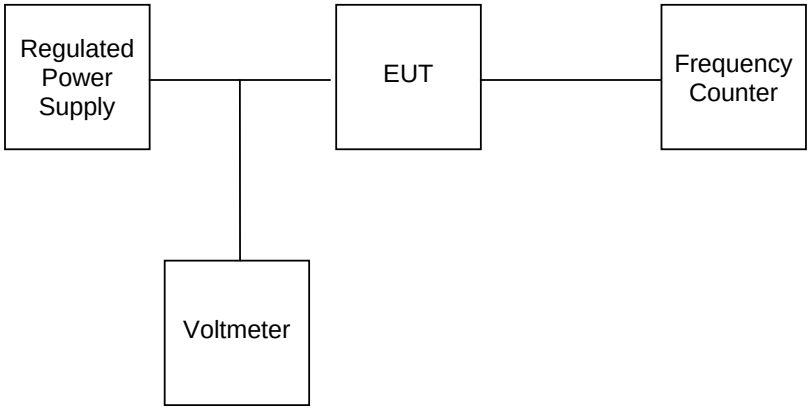

2. For battery powered equipment, reduce primary supply voltage to the battery operating end point voltage which is specified by the manufacturer.

Table 11

Tandy Electronics (China) Ltd.
32-1257

Power Supply Voltage Stability
Pursuant to FCC Section 2.1055

Manufacturer Specified Battery End Point Voltage (V)	Assigned Frequency (MHz)	Measured Frequency (MHz)	Deviation (kHz)
2	169.505	169.5048	0.2

Test Engineer: Terry C. H. Chan

Date of Test: April 06, 2005

Table 12

Tandy Electronics (China) Ltd.
32-1257

Power Supply Voltage Stability
Pursuant to FCC Section 2.1055

Manufacturer Specified Battery End Point Voltage (V)	Assigned Frequency (MHz)	Measured Frequency (MHz)	Deviation (kHz)
2	171.905	171.9048	0.2

Test Engineer: Terry C. H. Chan

Date of Test: April 06, 2005

7.2 Frequency Stability – Temperature

Testing Procedures

1. Set-up the test equipment in the following configuration:

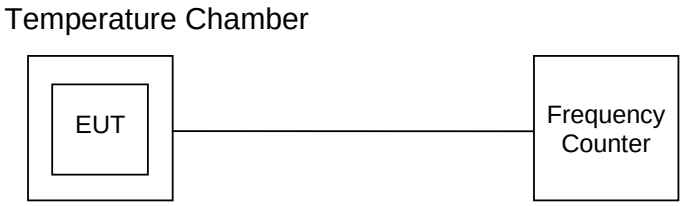

2. Set the Temperature Chamber to –30°C and stabilize the EUT temperature for one hour. Turn the transmitter ON for two minutes.

3. Turn the EUT OFF.

4. Repeat the above procedure with 10°C intervals from –30°C to 50°C.

Table 13

Tandy Electronics (China) Ltd.
32-1257

Temperature Stability
Pursuant to FCC Section 2.1055

Temperature (°C)	Assigned Frequency (MHz)	Measured Frequency (MHz)	Deviation (kHz)
–30	169.505	169.507929	–2.93
–20	169.505	169.507133	–2.13
–10	169.505	169.507028	–2.03
0	169.505	169.506508	–1.51
10	169.505	169.506010	–1.01
20	169.505	169.505101	–0.10
30	169.505	169.504015	–0.99
40	169.505	169.503019	+1.98
50	169.505	169.502294	+2.71

Test Engineer: Terry C. H. Chan Date of Test: April 06, 2005

Table 14

Tandy Electronics (China) Ltd.
32-1257

Temperature Stability
Pursuant to FCC Section 2.1055

Temperature (°C)	Assigned Frequency (MHz)	Measured Frequency (MHz)	Deviation (kHz)
–30	171.905	171.906443	–1.44
–20	171.905	171.906010	–1.01
–10	171.905	171.906600	–1.60
0	171.905	171.906737	–1.74
10	171.905	171.905769	–0.77
20	171.905	171.905222	–0.22
30	171.905	171.905092	–0.09
40	171.905	171.904501	+0.50
50	171.905	171.904378	+0.62

Test Engineer: Terry C. H. Chan Date of Test: April 06, 2005

EXHIBIT 8

TECHNICAL SPECIFICATIONS

8.0 Technical Specifications

For electronic filing, the block diagram and the schematic diagram of the Wireless Microphone are saved with filename: block.pdf and circuit.pdf respectively.

EXHIBIT 9

EQUIPMENT PHOTOGRAPHS

9.0 Equipment Photographs

For electronic filing, photographs of the tested EUT are saved with filename: internal photos.pdf and external photos.pdf

EXHIBIT 10

PRODUCT LABELLING

10.0 Product Labelling

For electronic filing, the label artwork and location are saved with filename: label.pdf

EXHIBIT 11

INSTRUCTION MANUAL

11.0 Instruction Manual

This manual will be provided to the end-user with each unit sold/leased in the United States.

Please note that the required FCC information to the user can be found at the front of this manual.

For electronic filing, a preliminary copy of the instruction manual is saved with filename: manual.pdf

EXHIBIT 12

TUNE UP PROCEDURE

12.0 Tune Up Procedure

In order to satisfy the FCC Section 2.1033(c)(9) requirement, a preliminary copy of the tune up procedure is saved with filename: tuneup.pdf

EXHIBIT 13

INPUT CURRENT

13.0 Input Current

In order to satisfy the FCC Section 2.1033(c)(8) requirement, the input current to final r.f. stage at 3V d.c. is 26mA.