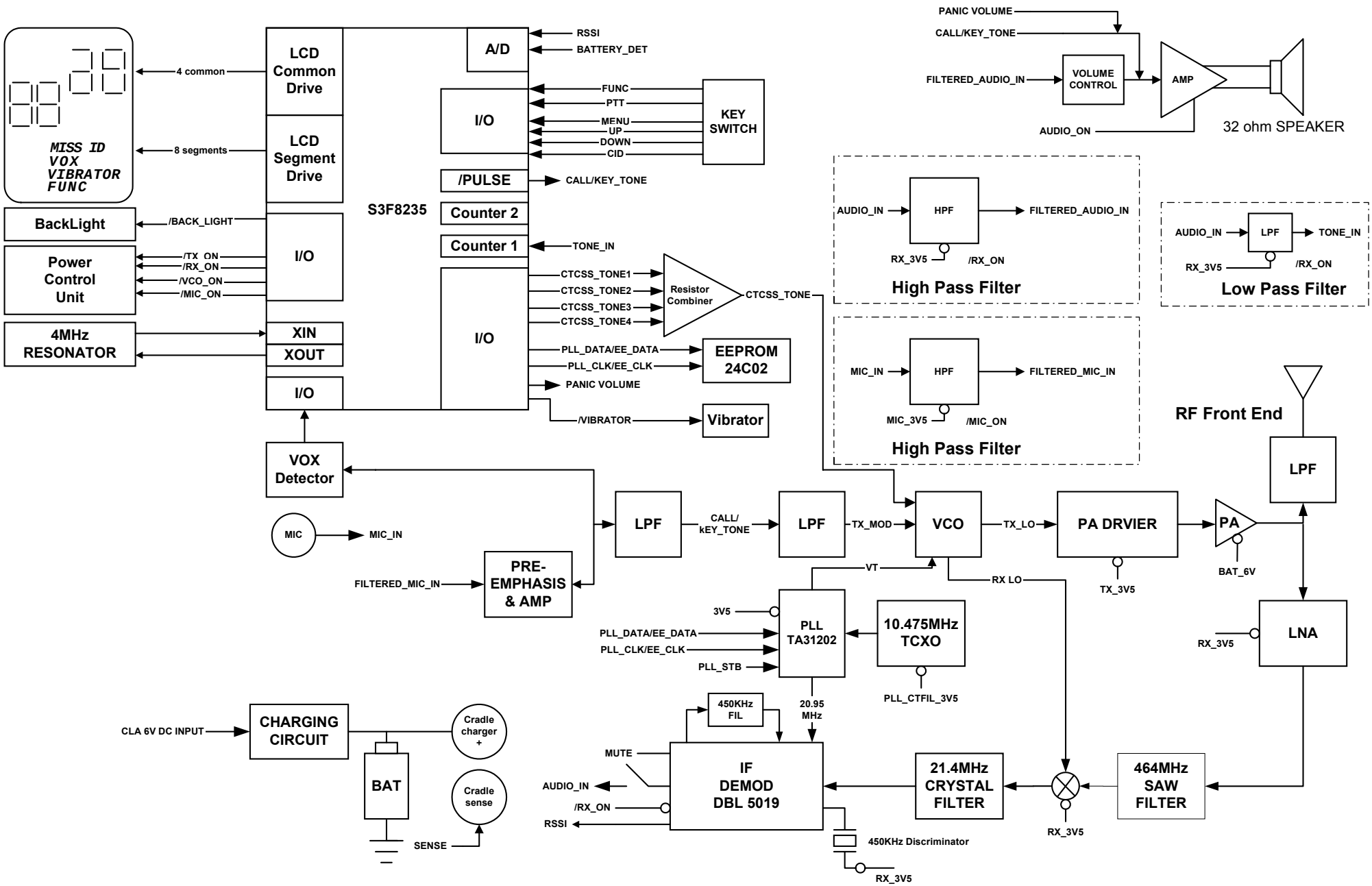21-1905 22 Channel, 0.5W/2W, CTCSS and VOX