RadioShack Corporation

Application
For
Certification
(FCC ID: AAO2101864)

March 11, 2002

WO# 0200662
WL/Sandy
March 11, 2002

- The test results reported in this report shall refer only to the sample actually tested and shall not refer or be deemed a refer to bulk from which such a sample may be said to have been obtained.
- This report shall not be reproduced except in full without prior authorization from Intertek Testing Services Hong Kong Limited
- For Terms And Conditions of the services, it can be provided upon request.

Intertek Testing Services Hong Kong Ltd.
2/F., Garment Centre, 576 Castle Peak Road, Kowloon, Hong Kong.
Tel: (852) 2173 8888 Fax: (852) 2785 5487

SUMMARY OF CONTENTS

LIST OF EXHIBITS

EXHIBIT 1:	General Description
EXHIBIT 2:	System Test Configuration
EXHIBIT 3:	RF Power Output
EXHIBIT 4:	Modulation Characteristics
EXHIBIT 5:	Occupied Bandwidth
EXHIBIT 6:	Spurious Emission
EXHIBIT 7:	Frequency Stability
EXHIBIT 8:	Technical Specifications
EXHIBIT 9:	Product Labelling
EXHIBIT 10:	Photographs
EXHIBIT 11:	Instruction Manual
EXHIBIT 12:	Tune Up Procedure
EXHIBIT 13:	Part List

MEASUREMENT/TECHNICAL REPORT

Application : RadioShack Corporation
Trade Name/Model No : RadioShack 21-1864
Date : March 11, 2002

This report concerns (check one:)Original Grant_X_ Class II Change_____

Equipment Type: Family Radio Service, FRS

Deferred grant requested per 47 CFR 0.457(d)(1)(ii)? Yes____ No_X_
If yes, defer until: _____
date

Company Name agrees to notify the Commission by: _____
date

of the intended date of announcement of the product so that the grant can be issued on that date.

Report prepared by:

Wilson Loke
Intertek Testing Services
2/F., Garment Centre,
576 Castle Peak Road,
Kowloon, Hong Kong.
Phone: 852-2173-8575
Fax: 852-2745-8306

Table of Contents

1.0 **General Description** 2
1.1 Product Description 2
1.2 Related Submittal(s) Grants 3
1.3 Test Methodology 3
1.4 Test Facility 3

2.0 **System Test Configuration** 5
2.1 Justification 5
2.2 EUT Exercising Software 6
2.3 Special Accessories 6
2.4 Measurement Uncertainty 6
2.5 Equipment Modification 6

3.0 **RF Output Power (Section 95.639(d))** 8

4.0 **Modulation Characteristics (Section 95.637(a))** 12
4.1 Modulation Frequiency Response 13
4.2 Modulation Limiting Characteristic 15
4.3 Audio Low Pass Filter Response 17

5.0 **Occupied Bandwidth (Section 95.633(c))** 19

6.0 **Spurious Emission (Section 95.635(b))** 21
6.1 Field Strength of Spurious Radiation 22

7.0 **Frequency Stability (Section 95.627)** 28
7.1 Frequency Tolerance 29
7.2 Temperature Extreme Condition 31
7.3 Voltage Extreme Condition 34

8.0 **Technical Specifications** 37

9.0 **Product Labelling** 41

10.0 **Equipment Photographs** 44

11.0 **Instruction Mannal** 46

12.0 **Tune Up Procedure** 48

13.0 **Part List** 50

List of attached file

Exhibit type	File Description	Filename
Operation Description	Technical Description	descri.pdf
Test Report	Bandwidth Plot	bw.pdf
Test Report	Modulation Frequency Response	mfr.pdf
Test Report	Modulation Limit Characteristic	mlc.pdf
Test Report	Spurious Emission	spurious.pdf
Block Diagram	Block Diagram	block.pdf
Schematics	Circuit Diagram	circuit.pdf
ID Label/Location	Label Artwork and Location	label.pdf
User Manual	User Manual	manual.pdf
Test Report	Test Report	report.doc
Test Setup Photo	Radiated Emission	radiated photos.doc
Internal Photo	Internal Photo	internal photos.doc
External Photo	External Photo	external photos.doc
Test Report	Tune Up Procedure	tuneup.pdf
Test Report	Part List	partlist.pdf
Test Report	Audio Low Pass Filter Response	lpf.pdf

EXHIBIT 1

GENERAL DESCRIPTION

1.0 General Description

1.1 Product Description

The Equipment Under Test (EUT) is a 14-Channel FRS Transceiver operating at 462.5625 to 467.7125MHz. The EUT is powered by 6.0V battery (4 x 1.5V "AAA" alkaline batteries) or 4 x 1.2V Ni-MH rechargeable batteries.

Transmitter Portion

(i) Type of Emission	:	10K2F3E
(ii) Frequency Range	:	462.5625 to 467.7125MHz
(iii) Maximum Power Rating	:	0.42W
(iv) Antenna Type	:	Integral

Input current to final r.f. stage at 6.0V d.c. is 240mA.

The brief circuit description is saved with filename: descri.pdf

1.2 Related Submittal(s) Grants

This is an Application for Certification of the transmitter portion of a FRS Transceiver. The receiver section of the FRS Transceiver is subject to verification process.

1.3 Test Methodology

Radiated emission measurements were performed according to the procedures in ANSI C63.4 (1992) and ANSI/TIA/EIA-603-1992. All measurement were performed in Open Area Test Sites. Preliminary scans were performed in the Open Area Test Sites only to determine worst case modes. For each scan, the procedure of maximizing emissions in Appendices D and E were followed. All Radiated tests were performed at an antenna the EUT distance of 3 meters, unless stated otherwise in the **"Justification Section"** of this Application.

1.4 Test Facility

The open area test site and conducted measurement facility used to collect the emission data is located at Garment Centre, 576 Castle Peak Road, Kowloon, Hong Kong. The test facility and site measurement data have been fully placed on file with the FCC.

EXHIBIT 2

SYSTEM TEST CONFIGURATION

2.0 System Test Configuration

2.1 Justification

The device was configured for testing in a typical fashion (as a customer would normally use it). The device was placed on a turntable, which enabled the engineer to maximize emissions through its placement in the three orthogonal axes. When the radiated emissions are measured.

The device was powered by 4 x fully charged 1.5V "AAA" battery.

The frequency range from 30 MHz to 4.68 GHz was searched for spurious emissions from the device. Only those emissions reported were detected. All other emissions were at least 20 dB below the applicable limits.

2.2 EUT Exercising Software

There was no special software to exercise the device. Once the unit is powered on, a signal is transmitted.

2.3 Special Accessories

A special headset is provided by client for compliance of this device.

2.4 Measurement Uncertainty

When determining of the test conclusion, the Measurement Uncertainty of test has been considered.

2.5 Equipment Modification

Any modification installed previous to testing by RadioShack Corporation will be incorporated in each production model sold/leased in the United States.

No modification were installed by Intertek Testing Services.

Confirmed by:

Wilson Loke
Manager
Intertek Testing Services
Agent for RadioShack Corporation

_____ Signature

March 11, 2002 Date

EXHIBIT 3

RF POWER OUTPUT

3.0 RF Power Output (Section 2.1046(a))

A. Equipment Used

Equipment	Brand Name	Model No.
Biconical Antenna	CDI	B300
Test receiver	Rohde & Schwarz	ESVS30
RF Filter	Tailithic	3VF
Tuned Dipole Antenna	CDI	Robert Antenna 4
Signal Generator	Maconi	2024

B. Testing Procedure

1. On a test site, the EUT shall be placed at 1.5m height on a turn table, and in the position closest to normal use as declared by the applicant.

2. The test antenna shall be oriented initially for vertical polarisation located 3m from EUT to correspond to the frequency of the transmitter.

3. The output of the test antenna shall be connected to the measuring receiver and the quasi-peak detector is used for the measurement.

4. The transmitter shall be switched on, if possible, without modulation and the measuring receiver shall be tuned to the frequency of the transmitter under test.

5. The test antenna shall be raised and lowered through the specified range of height until a maximum signal level is detected by the measuring receiver.

6. The transmitter shall then the rotated through 360° in the horizontal plane, until the maximum signal level is detected by the measuring receiver.

7. The test antenna shall be raised and lowered again through the specified range of height until a maximum signal level is detected by the measuring receiver.

8. The maximum signal level detected by the measuring receiver shall be noted.

9. The transmitter shall be replaced by a tuned dipole (substitution antenna).

10. The substitution antenna shall be orientated for vertical polarisation and the length of the substitution antenna shall be adjusted to correspond to the frequency of the transmitter.

11. The substitution antenna shall be connected to a calibrated signal generator.

12. If necessary, the input attenuator setting of the measuring receiver shall be adjusted in order to increase the sensitivity of the measuring receiver.

13. The test antenna shall be raised and lowered through the specified range of height to ensure that the maximum signal is received.

14. The input signal to the substitution antenna shall be adjusted to the level that produces a level detected by the measuring received, that is equal to the level noted while the transmitter radiated power was measured, corrected for the change of input attenuator setting of the measuring receiver.

15. The input level to the substitution antenna shall be recorded as power level in dBm, corrected for any change of input attenuator setting of the measuring receiver.

16. The measurement shall be repeated with the test antenna and the substitution antenna orientated for horizontal polarisation.

17. The measure of the effective radiated power is the larger of the two levels recorded, at the input to the substitution antenna, corrected for gain of the substitution antenna if necessary.

Table 1

RadioShack Corporation
RadioShack 21-1864

Transmission Power

Channel	Frequency (MHz)	Effective Radiated Power		Limit (W)	Margin (W)
		(dBm)	(W)		
1	462.5625	26.3	0.42	0.5	-0.08
2	462.5875	26.3	0.42	0.5	-0.08
3	462.6125	26.3	0.42	0.5	-0.08
4	462.6375	26.3	0.42	0.5	-0.08
5	462.6625	26.3	0.42	0.5	-0.08
6	462.6875	26.3	0.42	0.5	-0.08
7	462.7125	26.3	0.42	0.5	-0.08
8	467.5625	26.3	0.42	0.5	-0.08
9	467.5875	26.3	0.42	0.5	-0.08
10	467.6125	26.3	0.42	0.5	-0.08
11	467.6375	26.3	0.42	0.5	-0.08
12	467.6625	26.3	0.42	0.5	-0.08
13	467.6875	26.3	0.42	0.5	-0.08
14	467.7125	26.3	0.42	0.5	-0.08

Notes: Negative sign in the margin column shows the value below limits.

Test Engineer: Ben W. K. Ho Date of Test: February 4, 2002

EXHIBIT 4

MODULATION CHARACTERISTICS

4.0 Modulation Characteristics

In order to satisfy the 95.637(a) requirement, Modulation Frequency Response and Modulation Limit Characteristics are attached in Exhibit 4.1 & 4.2.

Plots for each tests are saved with filename: mfr.pdf and mlc.pdf

4.1 Modulation Frequency Response

A. Test Equipment

Equipment	Brand Name	Model No.
Audio Signal Generator	Leader	LFG-1300S
dB meter	Leader	LMV-182A
20 dB RF Load	Bird	8304-200-N
Modulation Meter	Marconi Instrument	2945

B. Testing Procedure

1) Set-up the test equipment in the following configuration:

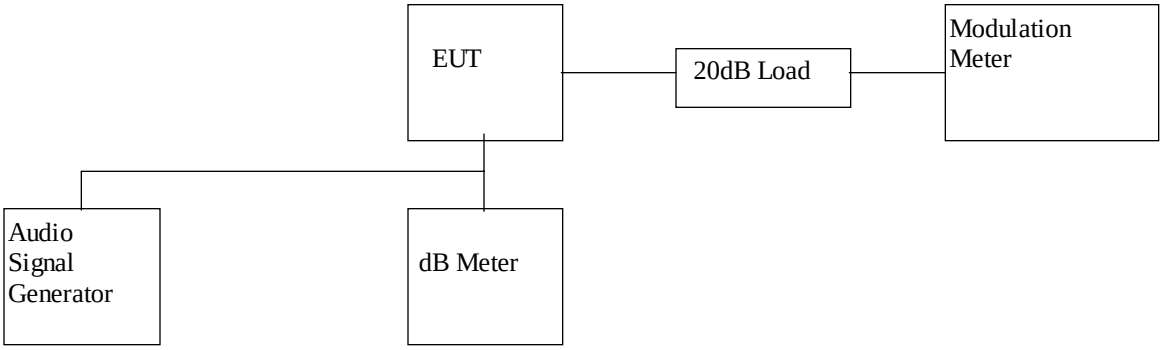

2) Set the audio signal generator frequency to the sound pressure level 97.0dBSPL at the microphone of the EUT.
3) The frequency of the audio signal generator is changed form 200Hz to 5kHz.
4) Record the frequency deviation.

C. Test Result

Table 2

RadioShack Corporation
RadioShack 21-1864

Modulation Frequency Response

Test Channel : 4
Input level = 97.0dBSPL

Modulation Frequency (Hz)	Modulation index (%)
200	0.40
300	0.27
400	0.95
500	0.98
600	1.07
700	1.13
800	1.28
900	1.00
1000	1.35
1250	1.00
1500	0.81
1750	0.70
2000	0.62
2250	0.56
2500	0.47
2750	0.39
3000	0.30
3125	0.26
3250	0.21
3500	0.16
4000	0.10
5000	0.04

Test Engineer: Ben W. K. Ho Date of Test: February 4, 2002

4.2 Modulation Limiting Characteristics (Section 2.1047(b))

A. Test Equipment

Equipment	Brand Name	Model No.
Audio Signal Generator	Leader	LFG-1300S
20 dB RF Load	Bird	8304-200-N
Modulation Meter	Marconi	2950

B. Testing Procedure

1) Set-up the test equipment in the following configuration:

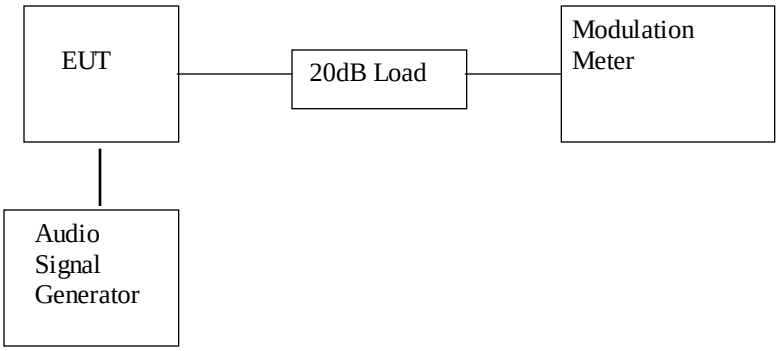

2) Set the frequency of the audio signal generator to 500Hz and adjust the level from 47dBSPL to 127dBSPL.
3) Record the maximum value of plus or minus peak frequency deviation.
4) Repeat the above procedure with frequency 1000Hz, 2500Hz & 3125Hz.

C. Test Result

Table 3

RadioShack Corporation
RadioShack 21-1864

Modulation Limiting Characteristics

Test Channel : 4

Modulation Input (dBSPL)	Peak Frequency Deviation (kHz) at 500Hz	Peak Frequency Deviation (kHz) at 1000Hz	Peak Frequency Deviation (kHz) at 2500Hz	Peak Frequency Deviation (kHz) at 3125Hz
47	0.08	0.08	0.08	0.08
57	0.08	0.08	0.08	0.08
67	0.09	0.09	0.11	0.09
77	0.10	0.14	0.22	0.14
87	0.18	0.30	0.57	0.32
97	0.44	0.83	1.16	0.76
107	1.25	1.41	1.24	0.87
117	1.29	1.43	1.25	0.89
127	1.31	1.44	1.25	0.90
137	1.32	1.45	1.25	0.91

Test Engineer: Ben W. K. Ho Date of Test: February 4, 2002

4.3 Audio Low Pass Filter Response (Section 95.637(b))

A. Test Equipment

Equipment	Brand Name	Model No.
Audio Signal Generator	Leader	LFG-1300S
dB meter	Leader	LMV-182A

B. Testing Procedure

1) Connect the audio signal generator to the input of the post limiter low pass filter and the dB meter to the output of the post limiter low pass filter.
2) Apply a 1000 Hz tone from the audio signal generator and adjust the level per manufacturer's specifications. Record the dB level of the 1000 Hz tone as LEV_{REF}.
3) Set the audio signal generator to the desired test frequency between 3000 Hz and the upper low pass filter limit. Record the dB level at the test frequency as LEV_{FREQ}.
4) Calculate the audio frequency response at the test frequency as:

low pass filter response = $LEV_{FREQ} - LEV_{REF}$

5) Repeat the above procedure for all the desired test frequencies.

C. Test Result

For electronic filing, the audio low pass frequency response is saved with filename: lpf.pdf.

EXHIBIT 5

OCCUPIED BANDWIDTH

5.0 Occupied Bandwidth (Section 95.633(c))

A. Test Equipment

Equipment	Brand Name	Model No.
Audio Signal Generator	Leader	LFG-1300S
dB meter	Leader	LMV-182A
20 dB RF Load	Bird	8304-200-N
Spectrum Analyzer	Hewlett Packard	8951EM

B. Testing Procedure

1) Set-up the test equipment in the following configuration:

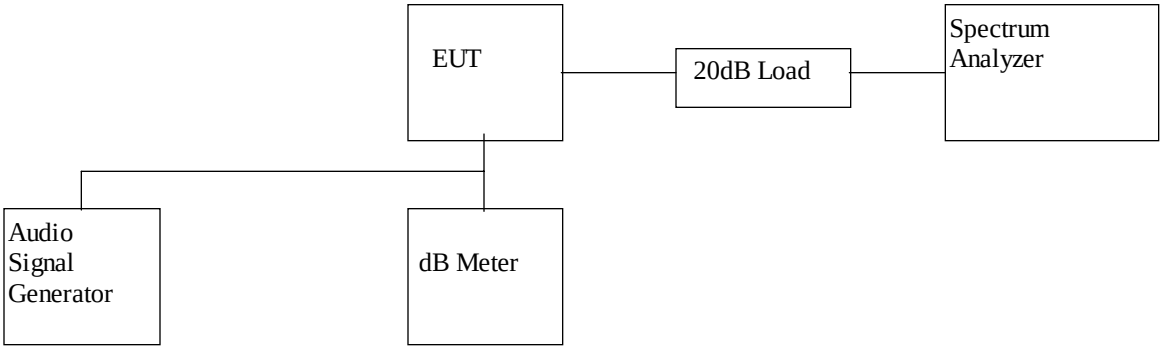

2) Set the level of audio signal generator to obtain 16 dB greater than required for 50% modulation.
3) The occupied bandwidth is measured with the spectrum analyzer set at 5kHz/div scan and 10dB/div.

C. Test Result

The occupied Bandwidth is measured to be 10.2 kHz.

For the electronic filing, the bandwidth plot is saved with filename:
bw.pdf

Test Engineer: Ben W. K. Ho Date of Test: February 4, 2002

EXHIBIT 6

SPURIOUS EMISSION

6.0 Spurious Emission (Section 95.635)

In order to satisfy the 95.635 requirement, the spurious emission from the EUT are measured and shown in the Exhibit 6.1.

6.1 Field Strength of Spurious Radiation (Section 95.635)

A. Test Equipment

Equipment	Brand Name	Model No.
Antenna	CDI	B100,B200,B300, Horn
Test receiver	Rohde & Schwarz	ESVS30
RF Filter	Tailithic	3VF

B. Testing Procedure

Radiated emission measurements were performed according to the procedures in ANSI C63.4(1992). All measurements were performed in Open Area Test Sites located at Roof Top of Garment Centre, 576 Castle Peak Road, Kowloon, Hong Kong.

C. Radiated Emission Configuration Photograph

Worst Case Radiated Emission

For electronic filing, the radiated emission configurations photograph is saved with filename: Radiated photos.doc

C. Test Result

RadioShack Corporation
RadioShack 21-1864

Table 4(a)

1. Unwanted emission from CARRIER ±6.25kHz to CARRIER ±31.25kHz

   (Refer to the plots which is saved with filename: spurious.pdf)

Region	Unwanted emission	
	Channel 4	Channel 11
CARRIER ±6.25kHz to ±12.5kHz	<25dB	<25dB
CARRIER ±12.5kHz to ±31.25kHz	<35dB	<35dB

Table 4(b): Channel 4

Frequency (MHz)	Effective Radiated Power (dBm)	Transmission Power (dBm)	Attenuation (dB)	Limited (dB)	Margin (dB)
925.190	-35.6	26.3	61.9	39.3	22.6
1387.785	-28.3	26.3	54.6	39.3	15.3
1850.381	-32.7	26.3	59.0	39.3	19.7
2312.975	-31.1	26.3	57.4	39.3	18.1
2775.570	-34.4	26.3	60.7	39.3	21.4
3238.165	-37.1	26.3	63.4	39.3	24.1

Remark:
1. Transmission power is 26.3 dBm or -3.7 dB(W).
2. According to Section 95.635(b7), the unwanted emission should be attenuated below TP by at least 43 + 10 $\log_{10}$ (TP) dB or 39.3 dB.
3. The test is performed according to ANSI/TIA/EIA-603-1992.

Test Engineer: Ben W. K. Ho Date of Test: February 4, 2002

Table 4(b): Channel 11

Frequency (MHz)	Effective Radiated Power (dBm)	Transmission Power (dBm)	Attenuation (dB)	Limit (dB)	Margin (dB)
935.314	-34.4	26.3	60.7	39.3	21.4
1402.971	-28.8	26.3	55.1	39.3	15.8
1870.628	-32.1	26.3	58.4	39.3	19.1
2338.285	-31.0	26.3	57.3	39.3	18.0
2805.942	-34.3	26.3	60.6	39.3	21.3
3273.599	-35.6	26.3	61.9	39.3	22.6

Remark:
1. Transmission power is 26.3 dBm or -3.7 dB(W).
2. According to Section 95.635(b7), the unwanted emission should be attenuated below TP by at least 43 + 10 $\log_{10}$ (TP) dB or 39.3 dB.
3. The test is performed according to ANSI/TIA/EIA-603-1992.

Test Engineer: Ben W. K. Ho Date of Test: February 4, 2002

EXHIBIT 7

FREQUENCY STABILITY

7.0 Frequency Stability

The frequency tolerance was tested in normal condition & over extreme ambient conditions with respect to voltage and temperature variation.

7.1 Frequency Tolerance (Section 95.625)

A. Test Equipment

Equipment	Brand Name	Model No.
Regulated Power Supply	PAD	30-35L
20 dB RF Load	Bird	8304-200-N
Frequency Counter	Phillips	PM6668

B. Testing Procedure

1) Set-up the test equipment in the following configuration:

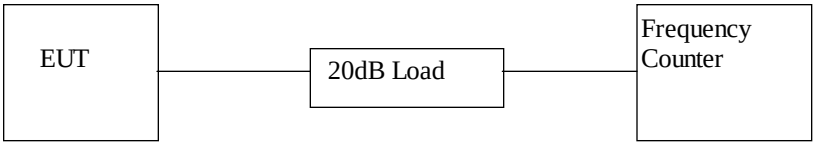

2) Measure all transmit channel frequencies in MHz.

C. Test Result

Table 5

RadioShack Corporation
RadioShack 21-1864

Frequency Tolerance

Channel	Frequency (MHz)	Measured Frequency (MHz)	Tolerance (%)
1	462.5625	462.56255	-0.000011
2	462.5875	462.58750	0.000000
3	462.6125	462.61245	0.000011
4	462.6375	462.63745	0.000011
5	462.6625	462.66260	-0.000022
6	462.6875	462.68765	-0.000032
7	462.7125	462.71260	-0.000022
8	467.5625	467.56255	-0.000011
9	467.5875	467.58760	-0.000021
10	467.6125	467.61260	-0.000021
11	467.6375	467.63760	-0.000021
12	467.6625	467.66260	-0.000021
13	467.6875	467.68765	-0.000032
14	467.7125	467.71265	-0.000032

7.2 Frequency Stability - Temperature (Section 2.1055)

A. Test Equipment

Equipment	Brand Name	Model No.
20 dB RF Load	Bird	8304-200-N
Frequency Counter	Phillips	PM6668

B. Testing Procedure

1) Set-up the test equipment in the following configuration:

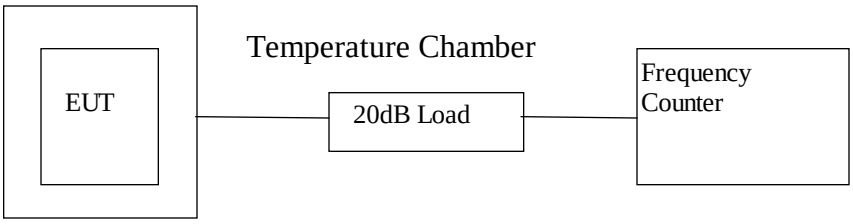

2) Set the Temperature Chamber to -20°C and stabilize the EUT temperature for one hour. Set transmitter ON for two minutes.
3) Measure the channel frequency of channel 4, 11 in MHz.
4) Turn the EUT OFF
5) Repeat the above procedure from -20°C to 50°C with 10°C increment.

C. Test Result

Table 6(a)

RadioShack Corporation
RadioShack 21-1864

Frequency Deviation with Temperature Variation

Channel : 4

Temperature (°C)	Assigned Frequency (MHz)	Measured Frequency (MHz)	% Deviation
-20	462.6375	462.63751	-0.000002
-10	462.6375	462.63725	0.000054
0	462.6375	462.63758	-0.000017
10	462.6375	462.63760	-0.000022
20	462.6375	462.63745	0.000011
30	462.6375	462.63760	-0.000022
40	462.6375	462.63755	-0.000011
50	462.6375	462.63780	-0.000065

Test Engineer: Ben W. K. Ho Date of Test: February 4, 2002

C. Test Result

Table 6(b)

RadioShack Corporation
RadioShack 21-1864

Frequency Deviation with Temperature Variation

Channel : 4

Temperature (°C)	Assigned Frequency (MHz)	Measured Frequency (MHz)	% Deviation
-20	467.6375	467.63720	0.000064
-10	467.6375	467.63750	0.000000
0	467.6375	467.63775	-0.000053
10	467.6375	467.63755	-0.000011
20	467.6375	467.63760	-0.000021
30	467.6375	467.63765	-0.000032
40	467.6375	467.63750	0.000000
50	467.6375	467.63780	-0.000064

Test Engineer: Ben W. K. Ho Date of Test: February 4, 2002

7.3 Frequency Stability - Voltage (Section 2.995)

A. Test Equipment

Equipment	Brand Name	Model No.
Regulated Power Supply	PAD	30-35L
20 dB RF Load	Bird	8304-200-N
Voltage meter	Fluke	87
Frequency Counter	Phillips	PM6668

B. Testing Procedure

1) Set-up the test equipment in the following configuration:

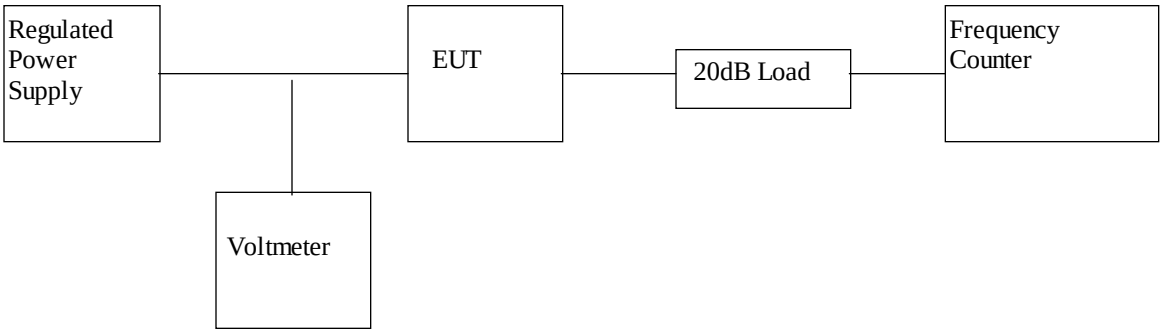

2) Vary the level of regulated power supply to the manufacturer specified battery end point of the EUT.
3) Measure the channel frequency from channel 1 to 14 in MHz.

C. Test Result

Table 7

RadioShack Corporation
RadioShack 21-1864

Frequency Deviation with Voltage Variation

The manufacturer specified battery end point 4.5V

Channel	Frequency (MHz)	Measured Frequency (MHz)	Tolerance (%)
4	462.6375	462.63750	0.000000
11	467.6375	467.63750	0.000000

EXHIBIT 8

TECHNICAL SPECIFICATIONS

8.0 Technical Specifications

8.1 Block Diagram

For electronic filing, the block diagram of the FRS is saved with filename: block.pdf

Figure 8.1 Block Diagram

8.2 Schematic Diagram

For electronic filing, the schematic diagram of the FRS is saved with filename: circuit.pdf

Figure 8.2 Schematic Diagram

EXHIBIT 9

PRODUCT LABELLING

9.0 Product Labelling

9.1 Label Artwork & Location

Figure 9.1 Label Artwork & Location

An engineering drawing of the label which will be permanently affixed to the unit. For electronic filing, the label artwork & location are saved with filename: label.pdf

EXHIBIT 10

PHOTOGRAPHS

10.0 Equipment Photographs

For electronic filing, photographs of the tested EUT are saved with filename: external photos.doc and internal photos.doc

EXHIBIT 11

INSTRUCTION MANUAL

11.0 Instruction Manual

This manual will be provided to the end-user with each unit sold/leased in the United States.

For electronic filing, a preliminary copy of the Instruction Manual is saved with filename: manual.pdf

EXHIBIT 12

TUNE UP PROCEDURE

12.0 Tune Up Procedure

For electronic filing, a preliminary copy of the Tune Up Procedure is saved with filename: tuneup.pdf

EXHIBIT 13

PART LIST

13.0 Part List

For electronic filing, a preliminary copy of the Part List is saved with filename: partlist.pdf