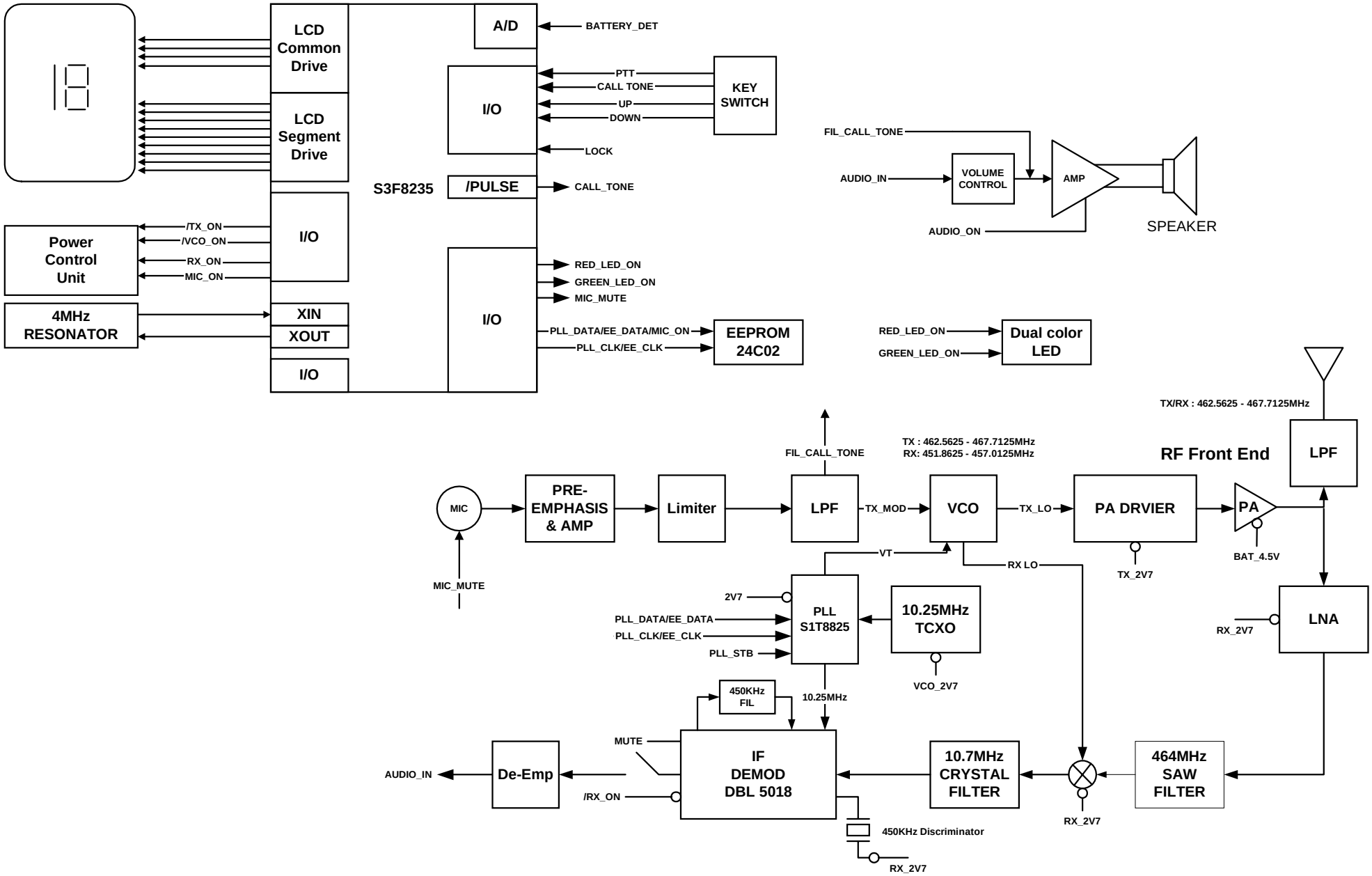21-1848 14 Channel MID Range FRS