# RadioShack Corporation

Application
For
Certification
**(FCC ID: AAO2101706)**

January 15, 2002

WO# 0113899
WL/at
January 15, 2002


- The test results reported in this report shall refer only to the sampel actually tested and shall not refer or be deemed a refer to bulk from which such a sample may be said to have been obtained
.
- This report shall not be reproduced except in full without prior authorization from Intertek Testing Services Hong Kong Limited.


FCC ID: AAO2101706

# SUMMARY OF CONTENTS

## LIST OF EXHIBITS

*INTRODUCTION*

| | |
|---|---|
| *EXHIBIT 1*: | General Description |
| *EXHIBIT 2*: | System Test Configuration |
| *EXHIBIT 3*: | RF Power Output |
| *EXHIBIT 4*: | Modulation Characteristics |
| *EXHIBIT 5*: | Occupied Bandwidth |
| *EXHIBIT 6*: | Spurious Emission |
| *EXHIBIT 7*: | Frequency Stability |
| *EXHIBIT 8*: | Technical Specifications |
| *EXHIBIT 9*: | Product Labelling |
| *EXHIBIT 10*: | Photographs |
| *EXHIBIT 11:* | Instruction Manual |
| *EXHBIIT 12:* | CB Transmitter Power |
| *EXHIBIT 13:* | Tune Up Procedure |
| *EXHIBIT 14:* | Part List |

## MEASUREMENT/TECHNICAL REPORT

**Application:** **RadioShack Corporation**
**Model No.:** **RadioShack 21-1706**
**Date:** **January 15, 2002**

This report concerns (check one:)Original Grant__X__ Class II Change_____

Equipment Type: CB Radio Station (example: computer, printer, modem. etc.)

Deferred grant requested per 47 CFR 0.457(d)(1)(ii)? Yes___ No_X_
If yes, defer until: _____
date

Company Name agrees to notify the Commission by: _____
date

of the intended date of announcement of the product so that the grant can be issued on that date.

_____

Report prepared by:

Tommy Leung
Intertek Testing Services.
2/F., Garment Centre,
576 Castle Peak Road,
Kowloon, Hong Kong.
Phone: 852-2173-8538
Fax: 852-2741-1693

# Table of Contents

1.1 Product Description ....2
2.0 **System Test Configuration** ....5
2.1 Justification ....5
2.2 EUT Exercising Software ....6
4.0 **Frequency Deviation** ....13
6.0 **Equipment Photographs** ....23
7.0 **Product Labelling** ....34
8.0 **Technical Specifications** ....43
9.0 **Product Labelling** ....47
10.0 **Equipment Photographs** ....49
11.0 **Instruction Manual** ....51
12.0 **CB Transmitter Power** ....53
13.0 **Tune Up Procedure** ....55
14.0 **Part List** ....57

List of attached file

| Exhibit type | File Description | Filename |
|---|---|---|
| Operation Description | Technical Description | descri.pdf |
| Test Report | Bandwidth Plot | bw.pdf |
| Test Report | Modulation Frequency Response | mfr.pdf |
| Test Report | Modulation Limit Characteristic | mlc.pdf |
| Test Report | Over Modulation Transient Response | mtr.pdf |
| Test Report | Spurious Emission | spurious.pdf |
| Block Diagram | Block Diagram | block.pdf |
| Schematics | Circuit Diagram | circuit.pdf |
| ID Label/Location | Label Artwork and Location | label.pdf |
| User Manual | User Manual | manual.pdf |
| Test Report | Test Report | report.doc |
| Test Setup Photo | Radiated Emission | Rconfig photos.doc |
| Internal Photo | Internal Photo | internal photos.doc |
| External Photo | External Photo | external photos.doc |
| Parts List/Tune-up Info | Tune Up Procedure | tuneup.pdf |
| Parts List/Tune-up Info | Part List | partlist.pdf |
| Parts List/Tune-up Info | Power Amplifier Specification | power.pdf |

# EXHIBIT 1

# GENERAL DESCRIPTION

## 1.0 General Description

### 1.1 Product Description

The Equipment Under Test (EUT) is a 40 Channel Mobile Citizen Band (CB) transceiver with digital compass operating between 26.965 and 27.405 MHz. The unit is powered from 13.8V d.c. The input current to final r.f. stage at 13.8V d.c. is 0.8A.

Transmitter Portion:

i) Type of emission: 6K00A3E
ii) Frequency Range: 26.965 MHz to 27.405 MHz
iii) Maximum Power Rating: 3.7 W
iv) With antenna terminal

For electronic filing, the brief circuit description is saved with filename: descri.pdf.

## 1.2 Related Submittal(s) Grants

This is an application for certification of the transmitter portion of a CB Transceiver. The receiver section of this product is subject to verification process.

## 1.3 Test Methodology

Radiated emission measurements were performed according to the procedures in ANSI C63.4 (1992). All measurement were performed in Open Area Test Sites. Preliminary scans were performed in the Open Area Test Sites only to determine worst case modes. For each scan, the procedure of maximizing emissions in Appendices D and E were followed. All Radiated tests were performed at an antenna the EUT distance of 3 meters, unless stated otherwise in the **"Justification Section"** of this Application.

## 1.4 Test Facility

The open area test site and conducted measurement facility used to collect the emission data is located at Garment Centre, 576 Castle Peak Road, Kowloon, Hong Kong. The test facility and site measurement data have been fully placed on file with the FCC.

# EXHIBIT 2

# SYSTEM TEST CONFIGURATION

## 2.0 System Test Configuration

### 2.1 Justification

The device was configured for testing in a typical fashion (as a customer would normally use it). The device was placed on a turntable, which enabled the engineer to maximize emissions through its placement in the three orthogonal axes. When the radiated emissions are measured.

The device was powered by a DC power supply adjusted to give 13.8 V d.c.

For measuring spurious and harmonic emissions of the transmitter, a 50Ω load was connected to the antenna terminal.

The frequency range from 25 MHz to 1 GHz was searched for radiated emissions from the device. Only those emissions reported were detected. All other emissions were at least 20 dB below the applicable limits.

2.2 EUT Exercising Software

There was no special software to exercise the device. Once the unit is powered on, a signal is transmitted.

2.3 Special Accessories

There are no special accessories necessary for compliance of this product.

2.4 Equipment Modification

Any modification installed previous to testing by RadioShack Corporation will be incorporated in each production model sold/leased in the United States.

No modification were installed by Intertek Testing Services.

2.5 Measurement Uncertainty

When determining of the test conclusion, the Measurement Uncertainty of test has been considered.

2.6 Support Equipment List & Description

Refer List:
1. Microphone with 1 m long cable
2. Headphone with 1 m long cable
3. 8 ohm load with 1 m long cable x 2

*Confirmed by:*

*Tommy Leung*
*Assistant Supervisor*
*Intertek Testing Services*
*Agent for RadioShack Corporation*

_____Signature

_____January 15, 2002_____ Date

# EXHIBIT 3

# RF POWER OUTPUT

## 3.0 RF Power Output (Section 2.1046(a))

A. Equipment Used

| Equipment | Brand Name | Model No. |
|---|---|---|
| Regulated Power Supply | PAD | 35-30L |
| Voltmeter | Fluke | 87 |
| Spectrum Analyzer | Hewlett Packard | 8591EM |
| 20dB RF Load | Bird | 8304-200-N |

B. Testing Procedure

1) Setup the test equipment in the following configuration:

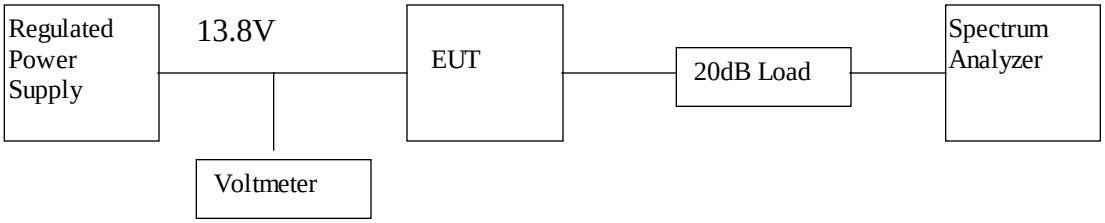


2) Measure the power of all channels (40 channels) by Spectrum Analyzer in Watt.
3) Calculate the actual power by times the measured power with a correction factor, 104.7#
   i.e. Actual Power = measured Power * 104.7

# The Correction Factor is included the 20dB Load and cable loss between EUT and 20dB load.

**Table 1**

**RadioShack Corporation**
**RadioShack 21-1706**

**Transmission Power**

| Channel | Frequency (MHz) | Measured Power (mW) | Net Power (W) | Limit (W) | Margin (W) |
|---|---|---|---|---|---|
| 1 | 26.965 | 35.5 | 3.7 | 4 | -0.3 |
| 2 | 26.975 | 35.5 | 3.7 | 4 | -0.3 |
| 3 | 26.985 | 35.5 | 3.7 | 4 | -0.3 |
| 4 | 27.005 | 35.5 | 3.7 | 4 | -0.3 |
| 5 | 27.015 | 35.5 | 3.7 | 4 | -0.3 |
| 6 | 27.025 | 35.5 | 3.7 | 4 | -0.3 |
| 7 | 27.035 | 35.5 | 3.7 | 4 | -0.3 |
| 8 | 27.055 | 35.5 | 3.7 | 4 | -0.3 |
| 9 | 27.065 | 35.5 | 3.7 | 4 | -0.3 |
| 10 | 27.075 | 35.5 | 3.7 | 4 | -0.3 |
| 11 | 27.085 | 35.5 | 3.7 | 4 | -0.3 |
| 12 | 27.105 | 35.5 | 3.7 | 4 | -0.3 |
| 13 | 27.115 | 35.5 | 3.7 | 4 | -0.3 |
| 14 | 27.125 | 35.5 | 3.7 | 4 | -0.3 |
| 15 | 27.135 | 35.5 | 3.7 | 4 | -0.3 |

Notes: Negative sign in the margin column shows the value below limits.

Test Engineer: Ben W.K. Ho Date of Test: December 12, 2001

**Table 1 (Cont'd...)**

**RadioShack Corporation**
**RadioShack 21-1706**

**Transmission Power**

| Channel | Frequency (MHz) | Measured Power (mW) | Net Power (W) | Limit (W) | Margin (W) |
|---|---|---|---|---|---|
| 16 | 27.155 | 35.5 | 3.7 | 4 | -0.3 |
| 17 | 27.165 | 35.5 | 3.7 | 4 | -0.3 |
| 18 | 27.175 | 35.5 | 3.7 | 4 | -0.3 |
| 19 | 27.185 | 35.5 | 3.7 | 4 | -0.3 |
| 20 | 27.205 | 35.5 | 3.7 | 4 | -0.3 |
| 21 | 27.215 | 35.5 | 3.7 | 4 | -0.3 |
| 22 | 27.225 | 35.5 | 3.7 | 4 | -0.3 |
| 23 | 27.255 | 35.5 | 3.7 | 4 | -0.3 |
| 24 | 27.235 | 35.5 | 3.7 | 4 | -0.3 |
| 25 | 27.245 | 35.5 | 3.7 | 4 | -0.3 |
| 24 | 27.265 | 35.5 | 3.7 | 4 | -0.3 |
| 27 | 27.275 | 35.5 | 3.7 | 4 | -0.3 |
| 28 | 27.285 | 35.5 | 3.7 | 4 | -0.3 |
| 29 | 27.295 | 35.5 | 3.7 | 4 | -0.3 |
| 30 | 27.305 | 35.5 | 3.7 | 4 | -0.3 |

Notes: Negative sign in the margin column shows the value below limits.

Test Engineer: Ben W.K. Ho Date of Test: December 12, 2001

**Table 1 (Cont'd...)**

**RadioShack Corporation**
**RadioShack 21-1706**

**Transmission Power**

| Channel | Frequency (MHz) | Measured Power (mW) | Net Power (W) | Limit (W) | Margin (W) |
|---|---|---|---|---|---|
| 31 | 27.315 | 35.5 | 3.7 | 4 | -0.3 |
| 32 | 27.325 | 35.5 | 3.7 | 4 | -0.3 |
| 33 | 27.335 | 35.5 | 3.7 | 4 | -0.3 |
| 34 | 27.345 | 35.5 | 3.7 | 4 | -0.3 |
| 35 | 27.355 | 35.5 | 3.7 | 4 | -0.3 |
| 36 | 27.365 | 35.5 | 3.7 | 4 | -0.3 |
| 37 | 27.375 | 35.5 | 3.7 | 4 | -0.3 |
| 38 | 27.385 | 35.5 | 3.7 | 4 | -0.3 |
| 39 | 27.395 | 35.5 | 3.7 | 4 | -0.3 |
| 40 | 27.405 | 35.5 | 3.7 | 4 | -0.3 |

Notes: Negative sign in the margin column shows the value below limits.

Test Engineer: Ben W.K. Ho Date of Test: December 12, 2001

# EXHIBIT 4

# MODULATION CHARACTERISTICS

## 4.0 Modulation Characteristics

In order to satisfy the 2.1047 requirement, Modulation Frequency Response, Modulation Limit Characteristics and Over Modulation Transient Response, are tested and result are saved with filenames: mfr.pdf, mlc.pdf and mtr.pdf respectively.

## 4.1 Modulation Frequency Response

### A. Test Equipment

| Equipment | Brand Name | Model No. |
|---|---|---|
| Regulated Power Supply | PAD | 30-35L |
| Audio Signal Generator | Leader | LFG-1300S |
| dB meter | Leader | LMV-182A |
| 20 dB RF Load | Bird | 8304-200-N |
| Modulation Meter | Marconi Instrument | 2945 |

### B. Testing Procedure

1) Set-up the test equipment in the following configuration:

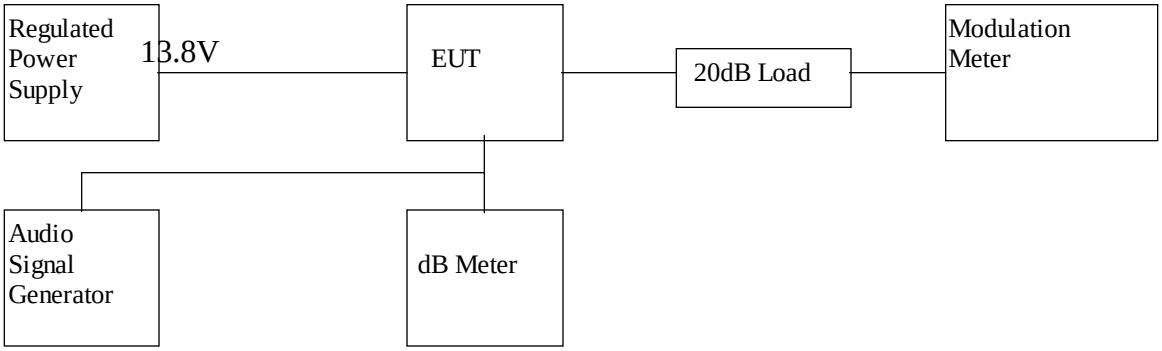


2) Set the audio signal generator frequency to 2kHz and adjust level to obtain 50% modulation. And then adjust the frequency to obtain the maximum audio frequency response of the EUT.
3) Adjust the level of audio signal generator to give 50% modulation at the maximum audio frequency response and take this level as the 0dB reference level.
4) The frequency of the audio signal generator is changed from 200Hz to 5kHz and adjust the level to obtain the 50% modulation at each frequency.
5) Record the level at each frequency reference to 0dB Level.

**C. Test Result**

## Table 2

## RadioShack Corporation
## RadioShack 21-1706

## Modulation Frequency Response (Section 2.1047(a))

Test Channel : 19
0 dB Level : -50.6 dBm
Modulation Output : 50%

| Modulation Frequency (Hz) | Modulation input relative to max. output. (dB) |
|---|---|
| 200 | 21.5 |
| 300 | 14.4 |
| 400 | 7.8 |
| 500 | 4.6 |
| 600 | 2.6 |
| 700 | 1.5 |
| 800 | 0.9 |
| 900 | 0.5 |
| 1000 | 0.3 |
| 1250 | 0.0 |
| 1500 | 0.0 |
| 1750 | 0.6 |
| 2000 | 1.1 |
| 2250 | 1.2 |
| 2500 | 1.3 |
| 2750 | 1.4 |
| 3000 | 1.9 |
| 3125 | 2.1 |
| 3250 | 3.9 |
| 3500 | 5.6 |
| 4000 | 13.5 |
| 5000 | 24.0 |

Test Engineer: Ben W.K. Ho Date of Test: December 12, 2001

## 4.2 Modulation Limiting Characteristics (Section 2.1047(b))

### A. Test Equipment

| Equipment | Brand Name | Model No. |
|---|---|---|
| Regulated Power Supply | PAD | 30-35L |
| Audio Signal Generator | Leader | LFG-1300S |
| dB meter | Leader | LMV-182A |
| 20 dB RF Load | Bird | 8304-200-N |
| Modulation Meter | Marconi | 2950 |

### B. Testing Procedure

1) Set-up the test equipment in the following configuration:

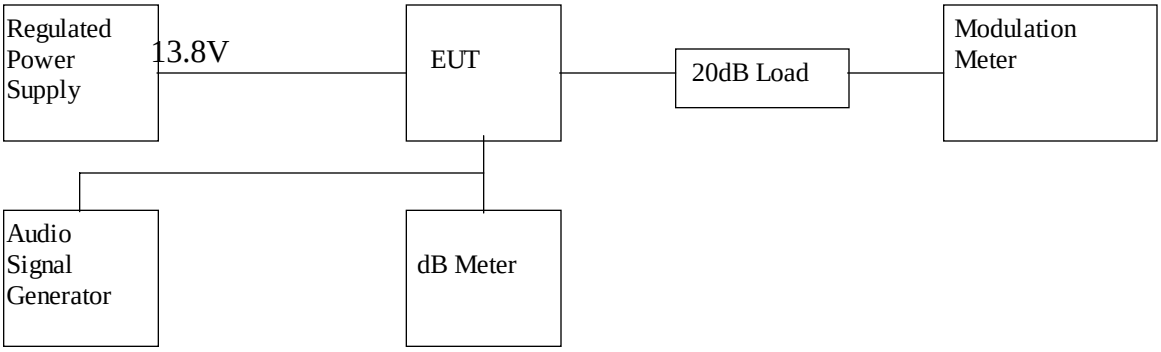


2) Set the frequency of the audio signal generator to 500Hz and adjust the level from -80dBm to -20dBm. Record the output modulation index.
3) Repeat the above procedure with frequency 1000Hz, 2500Hz & 3125Hz.

**C. Test Result**

**Table 3**

**RadioShack Corporation**
**RadioShack 21-1706**

**Modulation Limiting Characteristics**

Test Channel : 19

| Modulation Input (dBm) | Modulation Index(%) at 500Hz | Modulation Index(%) at 1000Hz | Modulation Index(%) at 2500Hz | Modulation Index(%) at 3125Hz |
|---|---|---|---|---|
| -80 | 2 | 2 | 2 | 2 |
| -70 | 6 | 10 | 5 | 4 |
| -60 | 20 | 32 | 16 | 10 |
| -50 | 67 | 78 | 54 | 33 |
| -40 | 78 | 79 | 75 | 63 |
| -30 | 80 | 81 | 77 | 64 |
| -20 | 83 | 86 | 80 | 66 |

Test Engineer: Ben W.K. Ho Date of Test: December 12, 2001

## 4.3 Over Modulation Transient Response (Section 2.1047(b))

### A. Test Equipment

| Equipment | Brand Name | Model No. |
|---|---|---|
| Regulated Power Supply | PAD | 30-35L |
| Audio Signal Generator | Leader | LFG-1300S |
| dB meter | Leader | LMV-182A |
| 20 dB RF Load | Bird | 8304-200-N |
| Spectrum Analyzer | Hewlett Packard | 8951EM |

### B. Testing Procedure

1) Set-up the test equipment in the following configuration:

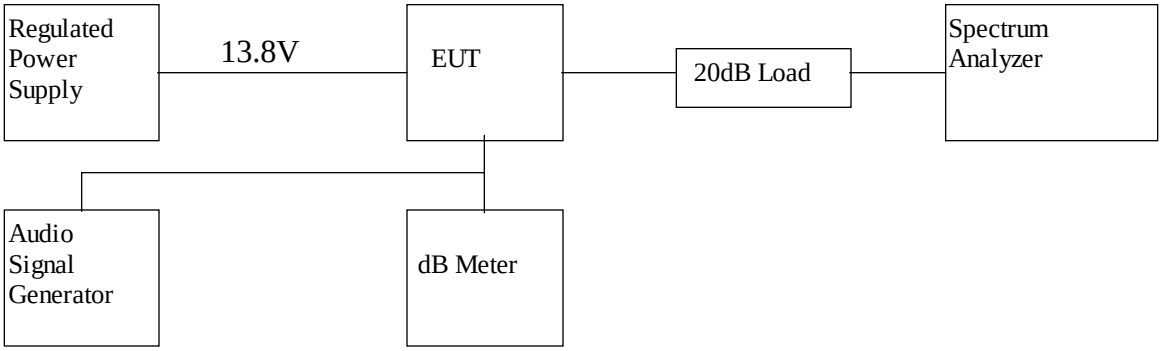


2) Set the frequency of the audio signal generator to 2.5kHz at level 16dB greater than required for 50% modulation.
3) Use the other audio signal generator pulse the previous signal at one P.P.S. with pulse width of 0.5 second.
4) Tune the spectrum analyzer to the channel on which the transmitter is set and adjust the setting as for the measurement of occupied bandwidth.
5) And then tune the spectrum analyser to adjacent channel(+/-10kHz) and use “Zero-scan” to observe the transients caused by the pulsed modulation.

**C. Test Result**

**Table 4**

**RadioShack Corporation**
**RadioShack 21-1706**

**Over modulation Transient Response**

| Channel | Adjacent Frequency (MHz) | Transient Level with respect to TP in (dB) | Transient Duration (ms) |
|---|---|---|---|
| 1 | 26.955 | -38.7 | 25 |
| 1 | 26.975 | -43.1 | 25 |
| 19 | 27.175 | -39.5 | 23 |
| 19 | 27.195 | -42.2 | 23 |
| 40 | 27.395 | -41.6 | 25 |
| 40 | 27.415 | -41.6 | 23 |

Remark: '-' sign in the Transient Level respect to the carrier Level column mean below the carrier level.

Test Engineer: Ben W.K. Ho Date of Test: December 12, 2001

# EXHIBIT 5

# OCCUPIED BANDWIDTH

## 5.0 Occupied Bandwidth (Section 2.1049 & Section 95.633)

### A. Test Equipment

| Equipment | Brand Name | Model No. |
|---|---|---|
| Regulated Power Supply | PAD | 30-35L |
| Audio Signal Generator | Leader | LFG-1300S |
| dB meter | Leader | LMV-182A |
| 20 dB RF Load | Bird | 8304-200-N |
| Spectrum Analyzer | Hewlett Packard | 8951EM |

### B. Testing Procedure

1) Set-up the test equipment in the following configuration:

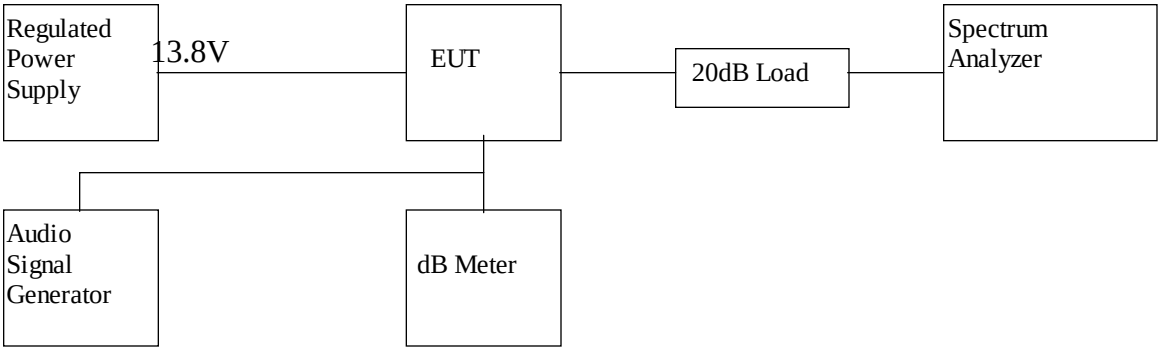


2) Set the level of audio signal generator to obtain 16 dB greater than required for 50% modulation.
3) The occupied bandwidth is measured with the spectrum analyzer set at 2kHz/div scan and 10dB/div.

### C. Test Result

The occupied Bandwidth is measured to be 6 kHz.

For the electronic filing, the bandwidth plot is saved with filename: bw.pdf

Test Engineer: Ben W.K. Ho Date of Test: December 12, 2001

# EXHIBIT 6

# SPURIOUS EMISSION

## 6.0 **Spurious Emission**

In order to satisfy the 2.1051 & 2.1053 requirement, the spurious emission from the antenna terminal and from the EUT are measured and shown in the Exhibit 6.1 & 6.2

## 6.1 Spurious emission at the antenna terminal (Section 2.1051 & Section 95.631)

### A. Test Equipment

| Equipment | Brand Name | Model No. |
|---|---|---|
| Regulated Power Supply | PAD | 30-35L |
| Audio Signal Generator | Leader | LFG-1300S |
| dB meter | Leader | LMV-182A |
| 20 dB RF Load | Bird | 8304-200-N |
| RF Filter | Tailithic | 3VF |
| Spectrum Analyzer | Hewlett Packard | 8951EM |

### B. Testing Procedure

1) Set-up the test equipment in the following configuration:

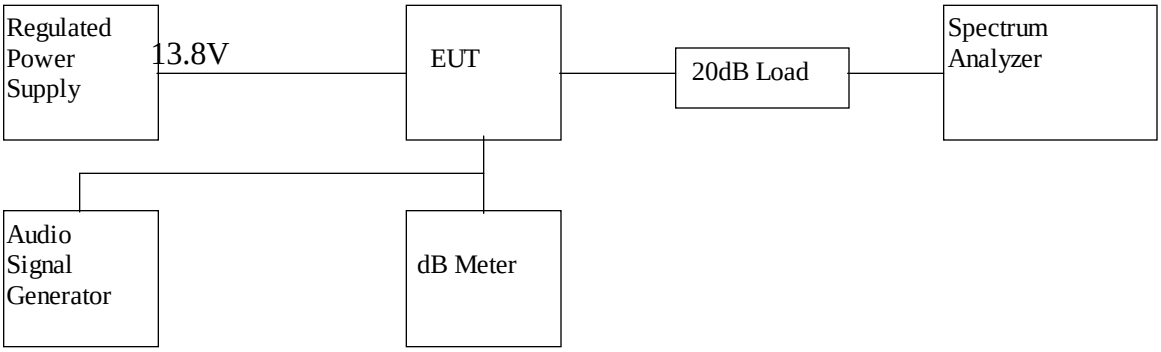


2) Set the level of audio signal generator to obtain 16 dB greater than required for 50% modulation.
3) Plot the graph of emissions with 50kHz span.
4) Measure the emissions relative to TP in region CARRIER ± 4kHz to CARRIER ± 20kHz from the plot.
5) Record the emissions relative to TP from region CARRIER ± 20kHz to 1000MHz.

### C. Test Result

**RadioShack Corporation**
**RadioShack 21-1706**
**Table 5(a)**

1) Unwanted emission from CARRIER ± 4kHz to CARRIER ± 20kHz (Refer to the plots which are saved with filename: spurious.pdf)

| Region | Unwanted emission | | |
|---|---|---|---|
| | Channel 1 | Channel 19 | Channel 40 |
| CARRIER ± 4kHz to ± 8kHz | < 25dB | < 25dB | < 25dB |
| CARRIER ± 8kHz to ± 20kHz | < 35dB | < 35dB | < 35dB |

2) Unwanted emission from CARRIER ± 20kHz to 1000MHz

**Table 5(b): Channel 1**

| Frequency (MHz) | Emission relative to TP (dB) | Limit (dB) | Margin (dB) |
|---|---|---|---|
| 53.930 | -60.8 | -60 | -0.8 |
| 80.895 | -71.2 | -60 | -11.2 |
| 107.860 | -91.2 | -60 | -31.2 |
| 134.825 | -96.7 | -60 | -36.7 |
| 161.790 | -105.9 | -60 | -45.9 |
| 188.755 | -112.6 | -60 | -52.6 |
| 215.720 | -119.5 | -60 | -59.5 |
| 242.685 | -131.0 | -60 | -71.0 |
| 269.650 | -123.7 | -60 | -63.7 |
| 296.615 | -116.6 | -60 | -56.6 |
| 323.580 | -123.5 | -60 | -63.5 |

Remark: '-' sign in margin column shows the value below the limits.

Test Engineer: Ben W.K. Ho Date of Test: December 12, 2001

**RadioShack Corporation**
**RadioShack 21-1706**

## Table 5(c): Channel 19

| Frequency (MHz) | Emission relative to TP (dB) | Limit (dB) | Margin (dB) |
|---|---|---|---|
| 54.370 | -60.7 | -60 | -0.7 |
| 81.555 | -70.6 | -60 | -10.6 |
| 108.740 | -90.7 | -60 | -30.7 |
| 135.925 | -96.1 | -60 | -36.1 |
| 163.110 | -105.0 | -60 | -45.0 |
| 190.295 | -112.3 | -60 | -52.3 |
| 217.480 | -118.5 | -60 | -58.5 |
| 244.665 | -129.0 | -60 | -69.0 |
| 271.850 | -122.0 | -60 | -62.0 |
| 299.035 | -116.0 | -60 | -56.0 |
| 326.220 | -123.0 | -60 | -63.0 |

Remark: ‘-‘ sign in margin column shows the value below the limits.

Test Engineer: Ben W.K. Ho Date of Test: December 12, 2001

## Table 5(d): Channel 40

| Frequency (MHz) | Emission relative to TP (dB) | Limit (dB) | Margin (dB) |
|---|---|---|---|
| 54.810 | -60.5 | -60 | -0.5 |
| 82.215 | -70.7 | -60 | -10.7 |
| 109.620 | -92.2 | -60 | -32.2 |
| 137.025 | -96.9 | -60 | -36.9 |
| 164.430 | -107.1 | -60 | -47.1 |
| 191.835 | -114.0 | -60 | -54.0 |
| 219.240 | -121.6 | -60 | -61.6 |
| 246.645 | -124.5 | -60 | -64.5 |
| 274.050 | -120.7 | -60 | -60.7 |
| 301.455 | -121.1 | -60 | -61.1 |
| 328.860 | -119.7 | -60 | -59.7 |

Remark: '-' sign in margin column shows the value below the limits.

Test Engineer: Ben W.K. Ho Date of Test: December 12, 2001

## 6.2 Spurious Emission by Substitution Method (Section 2.1053)

### A. Test Equipment

| Equipment | Brand Name | Model No. |
|---|---|---|
| Antenna | CDI | B100, B200, B300 |
| Test receiver | Rohde & Schwarz | ESVS30 |
| RF Filter | Tailithic | 3VF |
| Tuned Dipole Antenna | CDI | Robert Antenna 4 |
| Signal Generator | Maconi | 2024 |

### B. Testing Procedure

Radiated emission measurements were performed according to the procedures in ANSI C63.4(1992) and ANSI/TIA/EIA-603-1992. All measurements were performed in Open Area Test Sites located at Roof Top of Garment Centre, 576 Castle Peak Road, Kowloon, Hong Kong.

## C. Radiated Emission Configuration Photograph

Worst Case Radiated Emission

For electronic filing, the radiated emission configurations photograph is saved with filename: Rconfig photos.doc

**D. Test Result**

**Table 6**

**RadioShack Corporation**
**RadioShack 21-1706**
**Radiated Spurious Emissions**

Channel : 1
The output power of transmitter is 35.7 dBm

| Frequency (MHz) | ERP (dBm) | ERP relative to TOP* |
|---|---|---|
| 53.885 | -52.6 | -88.3 |
| 80.859 | -51.8 | -87.5 |
| 107.833 | -41.8 | -77.5 |
| 134.807 | -48.8 | -84.5 |
| 161.781 | -46.1 | -81.8 |
| 188.755 | -44.2 | -79.9 |
| 215.729 | -49.0 | -84.7 |
| 242.703 | -33.9 | -69.6 |
| 269.677 | -42.8 | -78.5 |
| 296.638 | -31.8 | -67.5 |
| 323.684 | -31.7 | -67.4 |
| 350.578 | -44.4 | -80.1 |
| 377.526 | -41.0 | -76.7 |
| 404.493 | -37.7 | -73.4 |
| 431.467 | -47.9 | -83.6 |
| 458.441 | -51.5 | -87.2 |
| 485.415 | -48.7 | -84.4 |
| 512.356 | -53.8 | -89.5 |
| 539.330 | -53.2 | -88.9 |
| 566.293 | -53.5 | -89.2 |
| 593.259 | -52.9 | -88.6 |
| 620.234 | -54.6 | -90.3 |

* "TOP" is Transmitter Output Power

Test Engineer: Ben W.K. Ho Date of Test: December 12, 2001

**D. Test Result**

**Table 7**

**RadioShack Corporation**
**RadioShack 21-1706**
**Radiated Spurious Emissions**

Channel : 19
The output power of transmitter is 35.7 dBm

| Frequency (MHz) | ERP (dBm) | ERP relative to TOP* |
|---|---|---|
| 54.354 | -51.1 | -86.8 |
| 81.531 | -57.1 | -92.8 |
| 108.708 | -40.0 | -75.7 |
| 135.885 | -46.8 | -82.5 |
| 169.098 | -47.1 | -82.8 |
| 190.275 | -57.8 | -93.5 |
| 217.485 | -44.2 | -79.9 |
| 244.664 | -37.0 | -72.7 |
| 271.841 | -36.9 | -72.6 |
| 299.661 | -30.0 | -65.7 |
| 326.238 | -31.0 | -66.7 |
| 353.415 | -41.6 | -77.3 |
| 380.592 | -40.8 | -76.5 |
| 407.769 | -45.0 | -80.7 |
| 434.980 | -54.4 | -90.1 |
| 462.160 | -51.4 | -87.1 |
| 516.514 | -57.7 | -93.4 |
| 543.691 | -59.8 | -95.5 |
| 570.891 | -54.6 | -90.3 |
| 598.114 | -53.1 | -88.8 |
| 625.291 | -55.0 | -90.7 |

* "TOP" is Transmitter Output Power

Test Engineer: Ben W.K. Ho Date of Test: December 12, 2001

**D. Test Result**

**Table 8**

**RadioShack Corporation**
**RadioShack 21-1706**
**Radiated Spurious Emissions**

Channel : 40
The output power of transmitter is 35.7 dBm

| Frequency (MHz) | ERP (dBm) | ERP relative to TOP* |
|---|---|---|
| 54.828 | -51.5 | -87.2 |
| 82.219 | -50.1 | -85.8 |
| 109.633 | -40.6 | -76.3 |
| 137.027 | -48.9 | -84.6 |
| 164.441 | -32.2 | -67.9 |
| 191.838 | -34.4 | -70.1 |
| 219.252 | -35.2 | -70.9 |
| 246.666 | -35.7 | -71.4 |
| 274.063 | -41.9 | -77.6 |
| 301.466 | -31.1 | -66.8 |
| 328.877 | -30.4 | -66.1 |
| 356.274 | -43.3 | -79.0 |
| 383.688 | -39.5 | -75.2 |
| 411.087 | -36.6 | -72.3 |
| 438.501 | -46.3 | -82.0 |
| 465.918 | -50.2 | -85.9 |
| 493.281 | -48.0 | -83.7 |
| 520.695 | -51.8 | -87.5 |
| 548.117 | -51.3 | -87.0 |
| 575.531 | -53.2 | -88.9 |
| 602.945 | -51.4 | -87.1 |
| 630.348 | -53.2 | -88.9 |

* "TOP" is Transmitter Output Power

Test Engineer: Ben W.K. Ho Date of Test: December 12, 2001

# EXHIBIT 7

# FREQUENCY STABILITY

## 7.0 Frequency Stability

The frequency tolerance was tested in normal condition & over extreme ambient conditions with respect to voltage and temperature variation.

## 7.1 Frequency Tolerance (Section 95.625)

### A. Test Equipment

| Equipment | Brand Name | Model No. |
|---|---|---|
| Regulated Power Supply | PAD | 30-35L |
| 20 dB RF Load | Bird | 8304-200-N |
| Frequency Counter | Phillips | PM6668 |

### B. Testing Procedure

1) Set-up the test equipment in the following configuration:

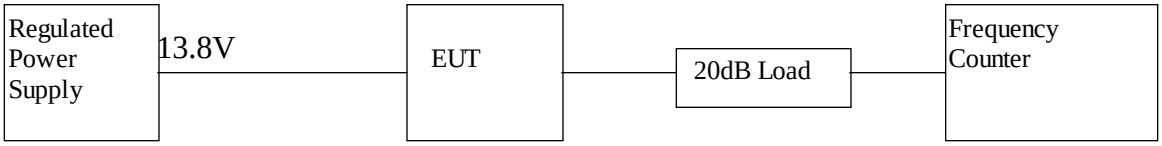


2) Measure all transmit channel frequencies in MHz.

## C. Test Result

### Table 9

### RadioShack Corporation
### RadioShack 21-1706
### Frequency Tolerance

| Channel | Frequency (MHz) | Measured Frequency (MHz) | Tolerance (%) |
|---|---|---|---|
| 1 | 26.96500 | 26.96505 | 0.000185 |
| 2 | 26.97500 | 26.97505 | 0.000185 |
| 3 | 26.98500 | 26398510 | 0.000371 |
| 4 | 27.00500 | 27.00505 | 0.000185 |
| 5 | 27.01500 | 27.01505 | 0.000185 |
| 6 | 27.02500 | 27.02505 | 0.000185 |
| 7 | 27.03500 | 27.03505 | 0.000185 |
| 8 | 27.05500 | 27.05510 | 0.000370 |
| 9 | 27.06500 | 27.06505 | 0.000185 |
| 10 | 27.07500 | 27.07505 | 0.000185 |
| 11 | 27.08500 | 27.08505 | 0.000185 |
| 12 | 27.10500 | 27.10510 | 0.000369 |
| 13 | 27.11500 | 27.11505 | 0.000184 |
| 14 | 27.12500 | 27.12505 | 0.000184 |
| 15 | 27.13500 | 27.13505 | 0.000184 |
| 16 | 27.15500 | 27.15505 | 0.000184 |
| 17 | 27.16500 | 27.16510 | 0.000368 |
| 18 | 27.17500 | 27.17505 | 0.000184 |
| 19 | 27.18500 | 27.18505 | 0.000184 |
| 20 | 27.20500 | 27.20505 | 0.000184 |
| 21 | 27.21500 | 27.21505 | 0.000184 |
| 22 | 27.22500 | 27.22505 | 0.000184 |
| 23 | 27.25500 | 27.25505 | 0.000184 |
| 24 | 27.23500 | 27.23505 | 0.000184 |
| 25 | 27.24500 | 27.24505 | 0.000184 |
| 26 | 27.26500 | 27.26505 | 0.000184 |

**C. Test Result**

**Table 9 (Cont'd...)**

**RadioShack Corporation**
**RadioShack 21-1706**
**Frequency Tolerance**

| Channel | Frequency (MHz) | Measured Frequency (MHz) | Tolerance (%) |
|---|---|---|---|
| 27 | 27.27500 | 27.27505 | 0.000183 |
| 28 | 27.28500 | 27.28505 | 0.000183 |
| 29 | 27.29500 | 27.29505 | 0.000183 |
| 30 | 27.30500 | 27.30505 | 0.000183 |
| 31 | 27.31500 | 27.31505 | 0.000183 |
| 32 | 27.32500 | 27.32505 | 0.000183 |
| 33 | 27.33500 | 27.33505 | 0.000183 |
| 34 | 27.34500 | 27.34505 | 0.000183 |
| 35 | 27.35500 | 27.35505 | 0.000183 |
| 36 | 27.36500 | 27.36505 | 0.000183 |
| 37 | 27.37500 | 27.37505 | 0.000183 |
| 38 | 27.38500 | 27.38505 | 0.000183 |
| 39 | 27.39500 | 27.38505 | 0.000183 |
| 40 | 27.40500 | 27.40505 | 0.000182 |

Test Engineer: Ben W.K. Ho Date of Test: December 12, 2001

## 7.2 Frequency Stability - Temperature (Section 2.1055)

### A. Test Equipment

| Equipment | Brand Name | Model No. |
|---|---|---|
| Regulated Power Supply | PAD | 30-35L |
| 20 dB RF Load | Bird | 8304-200-N |
| Frequency Counter | Phillips | PM6668 |

### B. Testing Procedure

1) Set-up the test equipment in the following configuration:

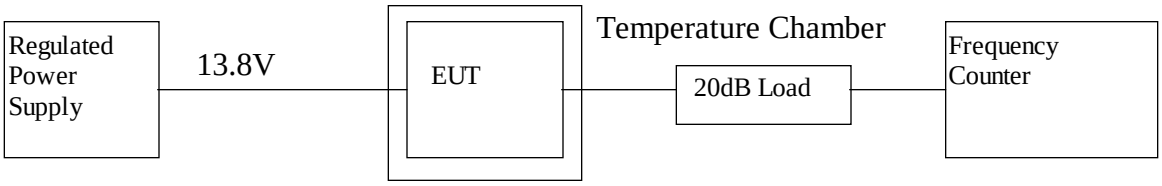


2) Set the Temperature Chamber to -30°C and stabilize the EUT temperature for one hour. Apply standard input voltage of 13.8 volts with transmitter ON for two minutes.
3) Measure the channel frequency of channel 19 in MHz.
4) Turn the EUT OFF
5) Repeat the above procedure with 10°C intervals form -30°C to 50°C

**C. Test Result**

**Table 10**

**RadioShack Corporation**
**RadioShack 21-1706**

**Frequency Deviation with Temperature Variation**

Channel : 19

| Temperature (°C) | Assigned Frequency (MHz) | Measured Frequency (MHz) | % Deviation |
|---|---|---|---|
| -30 | 27.18500 | 27.18455 | -0.001655 |
| -20 | 27.18500 | 27.18480 | -0.000736 |
| -10 | 27.18500 | 27.18485 | -0.000552 |
| 0 | 27.18500 | 27.18490 | -0.000368 |
| 10 | 27.18500 | 27.18495 | -0.000184 |
| 20 | 27.18500 | 27.18505 | 0.000184 |
| 30 | 27.18500 | 27.18495 | -0.000184 |
| 40 | 27.18500 | 27.18495 | -0.000184 |
| 50 | 27.18500 | 27.18510 | 0.000368 |

Test Engineer: Ben W.K. Ho Date of Test: December 12, 2001

## 7.3 Frequency Stability - Voltage (Section 2.1055)

### A. Test Equipment

| Equipment | Brand Name | Model No. |
|---|---|---|
| Regulated Power Supply | PAD | 30-35L |
| 20 dB RF Load | Bird | 8304-200-N |
| Voltage meter | Fluke | 87 |
| Frequency Counter | Phillips | PM6668 |

### B. Testing Procedure

1) Set-up the test equipment in the following configuration:

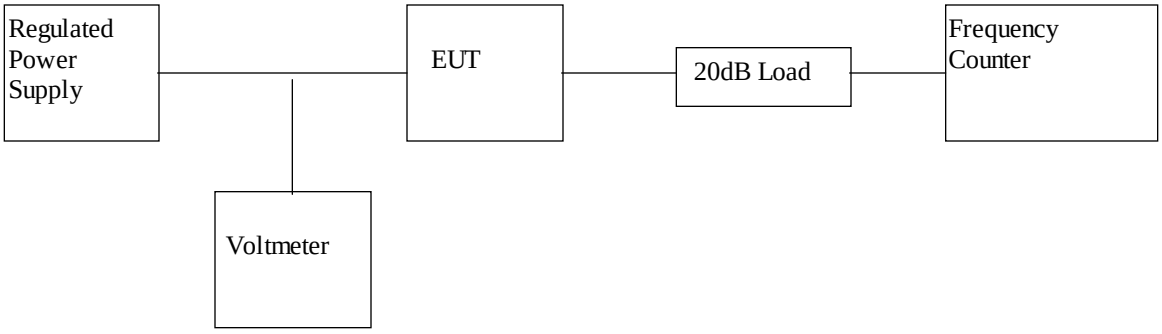


2) Vary the level of regulated power supply from 85% to 115% of the rated voltage and the manufacturer specified battery end point of the EUT.
3) Measure the channel frequency of channel 19 in MHz at each input power level.

**C. Test Result**

**Table 13**

**RadioShack Corporation**
**RadioShack 21-1706**

**Frequency Deviation with Voltage Variation**

The manufacturer specified battery end point 9V

Channel : 19

| Voltage (V) | Assigned Frequency (MHz) | Measured Frequency (MHz) | % Deviation |
|---|---|---|---|
| 15.9 | 27.18500 | 27.18505 | 0.000184 |
| 13.8 | 27.18500 | 27.18505 | 0.000184 |
| 11.7 | 27.18500 | 27.18505 | 0.000184 |
| 9.0 | 27.18500 | 27.18505 | 0.000184 |

# EXHIBIT 8

# TECHNICAL SPECIFICATIONS

## 8.0 **Technical Specifications**

## 8.1 Block Diagram

For electronic filing, the block diagram of the EUT is saved with filename: block.pdf.

## 8.2 Schematic Diagram

For electronic filing, the circuit diagram of the EUT is saved with filename: circuit.pdf.

# EXHIBIT 9

# PRODUCT LABELLING

## 9.0 Product Labelling

For electronic filing, the label artwork and location of the EUT is saved with filename: label.pdf.

# EXHIBIT 10

# PHOTOGRAPHS

## 10.0 Equipment Photographs

For electronic filing, photographs of the tested EUT are saved with filename: external photos.doc and internal photos.doc

# EXHIBIT 11

# INSTRUCTION MANUAL

## 11.0 Instruction Manual

For electronic filing, the user manual of the EUT is saved with filename: manual.pdf.

This manual will be provided to the end-user with each unit sold/leased in the United States.

# EXHIBIT 12

# CB TRANSMITTER POWER

## 12.0 CB Transmitter Power

The dissipation rating of all the semiconductors or electron tubes which supply RF power to the antenna terminals of each CB transmitter does not exceed 10W. The specification is saved with filename: power.pdf.

# EXHIBIT 13

# TUNE UP PROCEDURE

## 13.0 **Tune Up Procedure**

For electronic filing, a preliminary copy of the Tune Up Procedure is saved with filename: tuneup.pdf

# EXHIBIT 14

# PART LIST

## 14.0 **Part List**

For electronic filing, a preliminary copy of the Part List is saved with filename: partlist.pdf