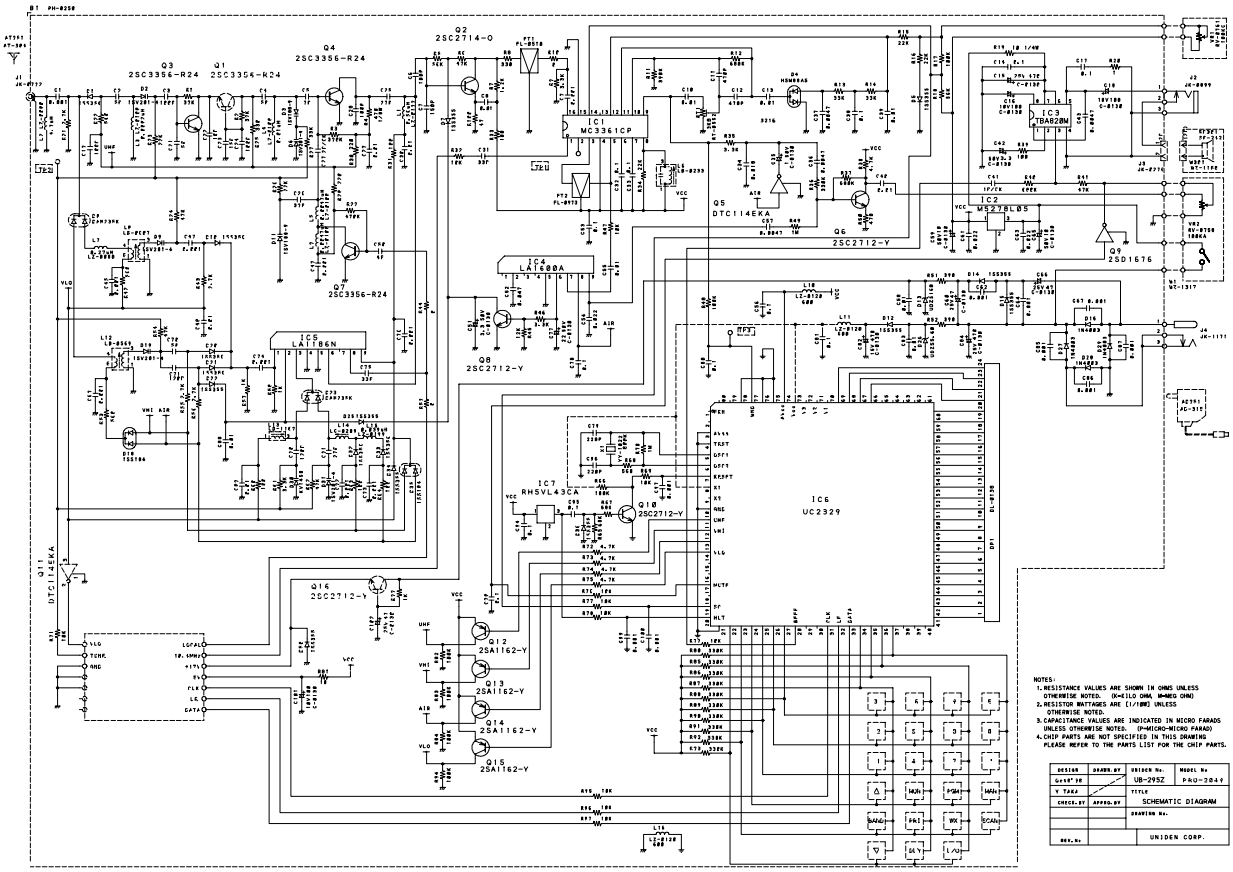

NOTES:
1. RESISTANCE VALUES ARE SHOWN IN OHMS UNLESS OTHERWISE NOTED. (K=KILO OHM, M=MEG OHM)
2. RESISTOR WATTAGES ARE (1/10W) UNLESS OTHERWISE NOTED.
3. CAPACITANCE VALUES ARE INDICATED IN MICRO FARADS UNLESS OTHERWISE NOTED. (P=MICRO-MICRO FARAD)
4. CHIP PARTS ARE NOT SPECIFIED IN THIS DRAWING PLEASE REFER TO THE PARTS LIST FOR THE CHIP PARTS.

DESIGN	DRAWN BY	UNIDEN No.	MODEL No.
Gene'JR		UB-295Z	PRO-2049
Y. TAKA		TITLE	
CHECK.BY	APPRO.BY	SCHEMATIC DIAGRAM	
		DRAWING No.	
REV. No.		UNIDEN CORP.	