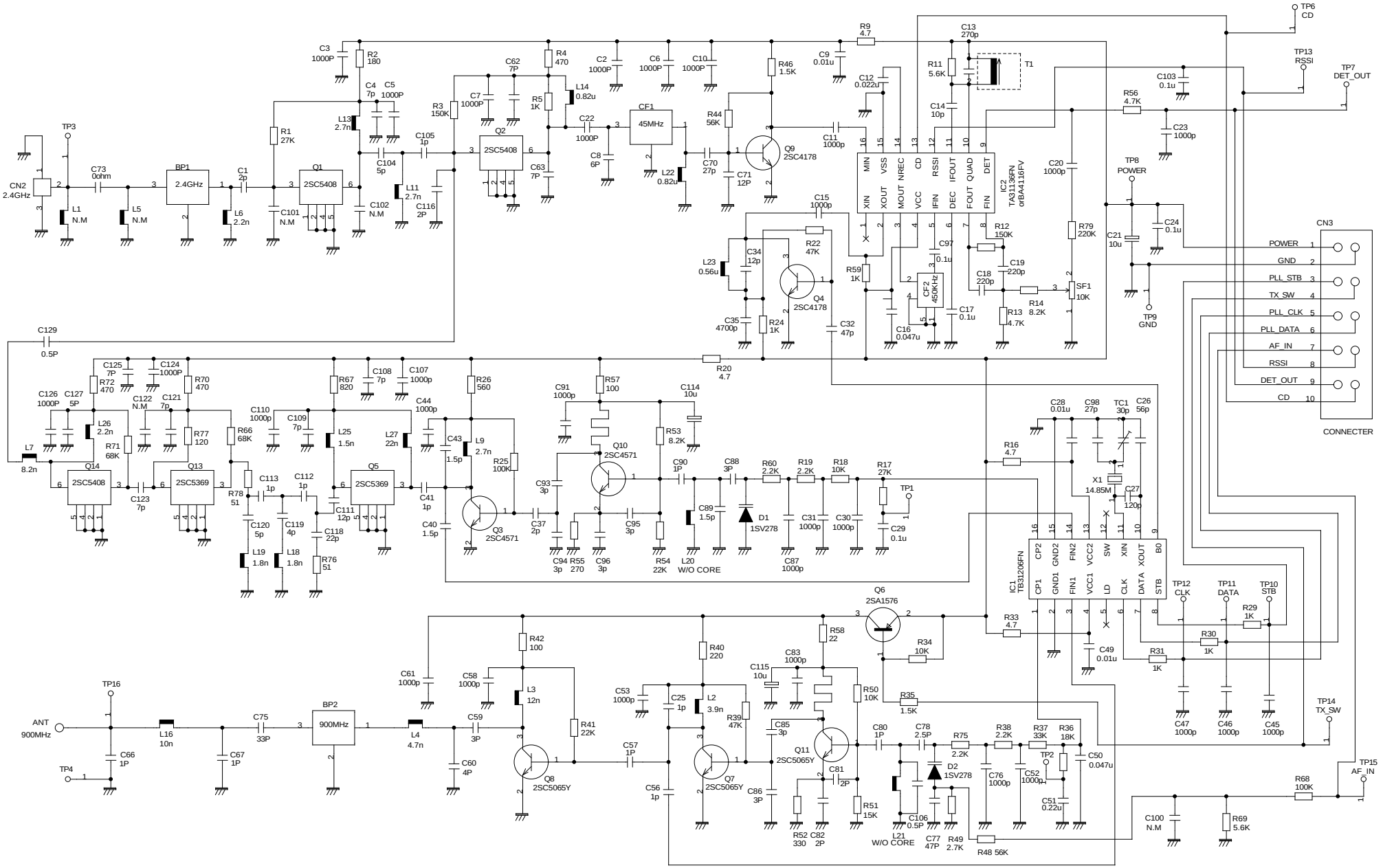

UNIT; R=ohm C=F L=H			V4	MODEL TP-3987(RF_MODULE_H/S)
DRAWING	DESING	CHECKED	APPROVED	PARTS_NAME SCHEMATIC_D/G
				PARTS_CODE 3987-498-0-00

DATE Mar_17_2000

ASAHI_CORPORATION