APPENDIX I: DOWNLINK LTE CA RF CONDUCTED POWERS

SAR test exclusion for LTE downlink Carrier Aggregation is determined by power measurements according to the number of component carriers (CCs) supported by the product implementation. Per April 2018 TCBC Workshop Notes, the following test reduction methodology was applied to determine the combinations required for conducted power measurements.

LTE DLCA Test Reduction Methodology:

- The supported combinations were arranged by the number of component carriers in columns.
- Any limitations on the PCC or SCC for each combination were identified alongside the combination (e.g. CA_2A-2A-4A-12A, but B12 can only be configured as a SCC).
- Power measurements were performed for "supersets" (LTE CA combinations with multiple components carriers) and any "subsets" (LTE CA combinations with fewer component carriers) that were not completely covered by the supersets.
- Only subsets that have the exact same components as a superset were excluded for measurement.
- When there were certain restrictions on component carriers that existed in the superset that were not applied for the subset, the subset configuration was additionally evaluated.
- Both inter-band and intra-band downlink carrier aggregation scenarios were considered.
- Downlink CA combinations for SISO and 4x4 Downlink MIMO operations were measured independently, per May 2017 TCBC Workshop notes.

Table I-1 – Example of Exclusion Table for SISO Configurations

Index	2CC	Supported Channel Bandwidth [MHz]		Restriction	Completely Covered by Measurement Superset
		CC1	CC2		
2CC #1	CA_2C	5, 10, 15, 20	5, 10, 15, 20		3CC #4
2CC #2	CA_2A-5A	5, 10, 15, 20	5, 10		4CC #1
2CC #3	CA_2A-12A	5, 10, 15, 20	5, 10		3CC #3
2CC #4	CA_2A-13A	5, 10, 15, 20	10		3CC #9
2CC #5	CA_2A-17A	5, 10	5, 10		No
2CC #6	CA_2A-30A	5, 10, 15, 20	5, 10		3CC #14
2CC #8	CA_2A-66A (2)	5, 10, 15, 20	5, 10, 15, 20		3CC #1
2CC #9	CA_2A-71A	5, 10, 15, 20	5, 10, 15, 20		3CC #10
2CC #10	CA_4A-4A	5, 10, 15, 20	5, 10, 15, 20		3CC #6
2CC #11	CA_4A-5A (1)	5, 10, 15, 20	5, 10		3CC #3
2CC #12	CA_4A-12A (4)	5, 10, 15, 20	5, 10		3CC #8
2CC #13	CA_4A-13A	5, 10, 15, 20	10		3CC #9
2CC #14	CA_4A-17A	5, 10	5, 10	B17 SCC Only	No
2CC #15	CA_5B	5, 10	5, 10		3CC #3
2CC #16	CA_5A-25A	5, 10	5, 10, 15, 20		No
2CC #17	CA_2C	15, 20	15, 20		No
2CC #18	CA_7A-7A (1)	5, 10, 15, 20	5, 10, 15, 20		No
2CC #19	CA_7A-12A	5, 10, 15, 20	5, 10		3CC #12
2CC #20	CA_12B	5	5, 10		3CC #13
2CC #21	CA_12A-25A	5, 10	5, 10, 15, 20		No
2CC #22	CA_13A-30A	5, 10	5, 10		3CC #14
2CC #23	CA_41A-41A (1)	5, 10, 15, 20	5, 10, 15, 20		No

Index	3CC	Supported Channel Bandwidth [MHz]			Restriction	Completely Covered by Measurement Superset
		CC1	CC2	CC3		
3CC #1	CA_2A-2A-4A	5, 10, 15, 20	5, 10, 15, 20	5, 10, 15, 20		4CC #1
3CC #2	CA_2A-2A-5A	5, 10, 15, 20	5, 10, 15, 20	5, 10		4CC #1
3CC #3	CA_2A-2A-12A	5, 10, 15, 20	5, 10, 15, 20	5, 10		No
3CC #4	CA_2A-2C-66A	5, 10, 15, 20	5, 10, 15, 20	5, 10, 15, 20		No
3CC #5	CA_2A-2A-71A	5, 10, 15, 20	5, 10, 15, 20	5, 10, 15, 20		No
3CC #6	CA_2A-4A-4A	5, 10, 15, 20	5, 10, 15, 20	5, 10, 15, 20		No
3CC #7	CA_2A-4A-5A	5, 10, 15, 20	5, 10, 15, 20	5, 10		4CC #1
3CC #8	CA_2A-4A-12A	5, 10, 15, 20	5, 10, 15, 20	5, 10		No
3CC #9	CA_2A-4A-13A	5, 10, 15, 20	5, 10, 15, 20	10		No
3CC #10	CA_2A-4A-71A	5, 10, 15, 20	5, 10, 15, 20	5, 10, 15, 20		No
3CC #11	CA_2A-5B	5, 10, 15, 20	5, 10	5, 10		4CC #1
3CC #12	CA_2A-5A-12A	5, 10, 15, 20	5, 10, 15, 20	5, 10		No
3CC #13	CA_2A-12B	5, 10, 15, 20	5	5, 10		No
3CC #14	CA_2A-12A-30A	5, 10, 15, 20	5, 10	5, 10		No
3CC #15	CA_4A-4A-5A	5, 10, 15, 20	5, 10, 15, 20	5, 10		No
3CC #16	CA_5B-30A	5, 10	5, 10	5, 10		3CC #3
3CC #17	CA_5B-66A	5, 10	5, 10	5, 10, 15, 20		3CC #3
3CC #18	CA_5A-30A-66A	5, 10	5, 10	5, 10, 15, 20		4CC #2
3CC #19	CA_12A-66C	5, 10	5, 10, 15, 20	5, 10, 15, 20		No
3CC #20	CA_30A-66A-66A	5, 10	5, 10, 15, 20	5, 10, 15, 20		4CC #2
3CC #21	CA_43D	10, 15, 20	5, 10, 15, 20	10, 15, 20		No
3CC #22	CA_41A-41C	5, 10, 15, 20	5, 10, 15, 20	5, 10, 15, 20		No
3CC #23	CA_66D	5, 10, 15, 20	5, 10, 15, 20	5, 10, 15, 20		No
3CC #24	CA_66A-66C	5, 10, 15, 20	5, 10, 15, 20	5, 10, 15, 20		No

Index	4CC	Supported Channel Bandwidth [MHz]				Restriction	Completely Covered by Measurement Superset
		CC1	CC2	CC3	CC4		
4CC #1	CA_2A-2A-4A-5A	5, 10, 15, 20	5, 10, 15, 20	5, 10, 15, 20	5, 10		No
4CC #2	CA_2A-2A-4A-12A	5, 10, 15, 20	5, 10, 15, 20	5, 10, 15, 20	5, 10	B12 SCC Only	No
4CC #3	CA_2A-2A-5A-30A	5, 10, 15, 20	5, 10, 15, 20	5, 10	5, 10		No
4CC #4	CA_2A-2A-5A-66A	5, 10, 15, 20	5, 10, 15, 20	5, 10	5, 10, 15, 20		No
4CC #5	CA_2A-5B-30A	5, 10, 15, 20	5, 10	5, 10	5, 10		4CC #1
4CC #6	CA_2A-5B-66A	5, 10, 15, 20	5, 10	5, 10	5, 10, 15, 20		4CC #1
4CC #7	CA_5B-30A-66A	5, 10	5, 10	5, 10	5, 10		3CC #1
4CC #8	CA_5B-66A-66A	5, 10	5, 10	5, 10, 15, 20	5, 10, 15, 20		3CC #2
4CC #9	CA_5A-30A-66A-66A	5, 10	5, 10	5, 10, 15, 20	5, 10, 15, 20		No
4CC #10	CA_41C	10, 20	10, 20	10, 20	20		No

Index	5CC	Supported Channel Bandwidth [MHz]					Restriction	Completely Covered by Measurement Superset
		CC1	CC2	CC3	CC4	CC5		
5CC #1	CA_2A-5B-30A-66A	5, 10, 15, 20	5, 10	5, 10	5, 10	5, 10, 15, 20		No
5CC #2	CA_2A-5B-66A-66A	5, 10, 15, 20	5, 10	5, 10	5, 10, 15, 20	5, 10, 15, 20		No

Table I-2 – Example of Exclusion Table for 4x4 Downlink MIMO Configurations

Index	2CC	Supported Channel Bandwidth [MHz]		Restriction	Completely Covered by Measurement Superset
		CC1	CC2		
2CC #M1	CA_[2C]	5, 10, 15, 20	5, 10, 15, 20		3CC #M6
2CC #M2	CA_[2A]-2A	5, 10, 15, 20	5, 10, 15, 20		3CC #M1
2CC #M3	CA_[2A]-[2A]	5, 10, 15, 20	5, 10, 15, 20		No
2CC #M4	CA_[2A]-4A (2)	5, 10, 15, 20	5, 10, 15, 20		3CC #M1
2CC #M5	CA_[2A]-[4A] (2)	5, 10, 15, 20	5, 10, 15, 20		No
2CC #M6	CA_[2A]-5A	5, 10, 15, 20	5, 10		4CC #M3
2CC #M7	CA_[2A]-12A (1)	5, 10, 15, 20	3, 5, 10		No
2CC #M8	CA_[2A]-13A	5, 10, 15, 20	10		3CC #M4
2CC #M9	CA_[2A]-17A	5, 10	5, 10		No
2CC #M10	CA_[2A]-29A (2)	5, 10, 15, 20	5, 10	B29 SCC Only	3CC #M12
2CC #M11	CA_[2A]-30A	5, 10, 15, 20	5, 10		3CC #M5
2CC #M12	CA_[2A]-66A (2)	5, 10, 15, 20	5, 10, 15, 20		4CC #M1
2CC #M13	CA_2A-[66A] (2)	5, 10, 15, 20	5, 10, 15, 20		4CC #M2
2CC #M14	CA_[2A]-[66A] (2)	5, 10, 15, 20	5, 10, 15, 20		No
2CC #M15	CA_[2A]-71A	5, 10, 15, 20	5, 10, 15, 20		3CC #M11
2CC #M16	CA_5A-[66A]	5, 10	5, 10, 15, 20		3CC #M16
2CC #M17	CA_12A-[66A] (4)	5, 10	5, 10, 15, 20		3CC #M17
2CC #M18	CA_13A-[66A]	5, 10	5, 10, 15, 20		3CC #M19
2CC #M19	CA_30A-[66A]	5, 10	5, 10, 15, 20		3CC #M20
2CC #M20	CA_[66B]	5, 10, 15	5, 10, 15		4CC #M4
2CC #M21	CA_[66C]	5, 10, 15, 20	5, 10, 15, 20		4CC #M6
2CC #M22	CA_[66A]-66A	5, 10, 15, 20	5, 10, 15, 20		3CC #M28
2CC #M23	CA_[66A]-[66A]	5, 10, 15, 20	5, 10, 15, 20		No

Index	3CC	Supported Channel Bandwidth [MHz]			Restriction	Completely Covered by Measurement Superset
		CC1	CC2	CC3		
3CC #M1	CA_[2A]-2A-4A	5, 10, 15, 20	5, 10, 15, 20	5, 10, 15, 20		No
3CC #M2	CA_[2A]-2A-5A	5, 10, 15, 20	5, 10, 15, 20	5, 10		No
3CC #M3	CA_[2A]-2A-12A	5, 10, 15, 20	5, 10, 15, 20	5, 10		No
3CC #M4	CA_[2A]-2A-13A	5, 10, 15, 20	5, 10, 15, 20	10		No
3CC #M5	CA_[2A]-2A-30A	5, 10, 15, 20	5, 10, 15, 20	5, 10		No
3CC #M6	CA_[2C]-66A	5, 10, 15, 20	5, 10, 15, 20	5, 10, 15, 20		No
3CC #M7	CA_2C-[66A]	5, 10, 15, 20	5, 10, 15, 20	5, 10, 15, 20		No
3CC #M8	CA_[2C]-[66A]	5, 10, 15, 20	5, 10, 15, 20	5, 10, 15, 20		No
3CC #M9	CA_[2A]-2A-66A	5, 10, 15, 20	5, 10, 15, 20	5, 10, 15, 20		No
3CC #M10	CA_2A-2A-[66A]	5, 10, 15, 20	5, 10, 15, 20	5, 10, 15, 20		No
3CC #M11	CA_[2A]-2A-71A	5, 10, 15, 20	5, 10, 15, 20	5, 10, 15, 20		No
3CC #M12	CA_[2A]-4A-29A	5, 10, 15, 20	5, 10, 15, 20	5, 10	B29 SCC Only	No
3CC #M13	CA_[2A]-4A-71A	5, 10, 15, 20	5, 10, 15, 20	5, 10, 15, 20		No
3CC #M14	CA_[2A]-5B	5, 10, 15, 20	5, 10	5, 10		4CC #M1
3CC #M15	CA_[2A]-5A-66A	5, 10, 15, 20	5, 10	5, 10, 15, 20		No
3CC #M16	CA_2A-5A-[66A]	5, 10, 15, 20	5, 10	5, 10, 15, 20		No
3CC #M17	CA_2A-12A-[66A]	5, 10, 15, 20	5, 10	5, 10, 15, 20		No
3CC #M18	CA_[2A]-13A-66A	5, 10, 15, 20	5, 10	5, 10, 15, 20		No
3CC #M19	CA_2A-13A-[66A]	5, 10, 15, 20	5, 10	5, 10, 15, 20		No
3CC #M20	CA_2A-30A-[66A]	5, 10, 15, 20	5, 10	5, 10, 15, 20		No
3CC #M21	CA_[2A]-66B	5, 10, 15, 20	5, 10, 15	5, 10, 15		4CC #M3
3CC #M22	CA_[2A]-[66B]	5, 10, 15, 20	5, 10, 15	5, 10, 15		4CC #M4
3CC #M23	CA_[2A]-[66B]	5, 10, 15, 20	5, 10, 15	5, 10, 15		No
3CC #M24	CA_[2A]-66C	5, 10, 15, 20	5, 10, 15, 20	5, 10, 15, 20		4CC #M5
3CC #M25	CA_2A-[66C]	5, 10, 15, 20	5, 10, 15, 20	5, 10, 15, 20		4CC #M6
3CC #M26	CA_[2A]-[66C]	5, 10, 15, 20	5, 10, 15, 20	5, 10, 15, 20		No
3CC #M27	CA_[2A]-66A-66A	5, 10, 15, 20	5, 10, 15, 20	5, 10, 15, 20		No
3CC #M28	CA_2A-[66A]-66A	5, 10, 15, 20	5, 10, 15, 20	5, 10, 15, 20		No
3CC #M29	CA_[2A]-66A-71A	5, 10, 15, 20	5, 10, 15, 20	5, 10, 15, 20		No

Index	4CC	Supported Channel Bandwidth [MHz]				Restriction	Completely Covered by Measurement Superset
		CC1	CC2	CC3	CC4		
4CC #M1	CA_[2A]-5B-66A	5, 10, 15, 20	5, 10	5, 10	5, 10, 15, 20		No
4CC #M2	CA_2A-5B-[66A]	5, 10, 15, 20	5, 10	5, 10	5, 10, 15, 20		No
4CC #M3	CA_[2A]-5A-66B	5, 10, 15, 20	5, 10	5, 10, 15	5, 10, 15		No
4CC #M4	CA_2A-5A-[66B]	5, 10, 15, 20	5, 10	5, 10, 15	5, 10, 15		No
4CC #M5	CA_[2A]-5A-66C	5, 10, 15, 20	5, 10	5, 10, 15, 20	5, 10, 15, 20		No
4CC #M6	CA_2A-5A-[66C]	5, 10, 15, 20	5, 10	5, 10, 15, 20	5, 10, 15, 20		No

Note: [CC] indicates component carrier with 4x4 DL MIMO antenna configuration

I.1 LTE Downlink Only Carrier Aggregation Test Selection and Setup

SAR test exclusion for LTE downlink Carrier Aggregation is determined by power measurements according to the number component carriers (CCs) supported by the product implementation. For those configurations required by April 2018 TCBC Workshop Notes, conducted power measurements with LTE Carrier Aggregation (CA) (downlink only) active are made in accordance to KDB Publication 941225 D05Av01r02. The RRC connection is only

handled by one cell, the primary component carrier (PCC) for downlink and uplink communications. After making a data connection to the PCC, the UE device adds secondary component carrier(s) (SCC) on the downlink only. All uplink communications and acknowledgements remain identical to specifications when downlink carrier aggregation is inactive on the PCC. Additional conducted output powers are measured with the downlink carrier aggregation active for the configuration with highest measured maximum conducted power with downlink carrier aggregation inactive measured among the channel bandwidth, modulation, and RB combinations in each frequency band.

Per FCC KDB Publication 941225 D05Av01r02, no SAR measurements are required for carrier aggregation configurations when the maximum average output power with downlink only carrier aggregation active is not more than 0.25 dB higher than the average output power with downlink only carrier aggregation inactive. All bands required for SAR testing per FCC KDB procedures were considered. Based on the measured maximum powers below, no additional SAR tests were required for DLCA SAR configurations.

General PCC and SCC configuration selection procedure

- PCC uplink channel, channel bandwidth, modulation and RB configurations were selected based on section C)3)b)ii) of KDB 941225 D05 V01r02. All LTE bandwidth conducted powers needed for PCC uplink configuration selection can be found in the RF Conducted Powers Section and LTE/NR Lower Bandwidth RF Conducted Power Appendix. The downlink PCC channel was paired with the selected PCC uplink channel according to normal configurations without carrier aggregation.
- To maximize aggregated bandwidth, highest channel bandwidth available for that CA combination was selected for SCC. For inter-band CA, the SCC downlink channels were selected near the middle of their transmission bands. For contiguous intra-band CA, the downlink channel spacing between the component carriers was set to multiple of 300 kHz less than the nominal channel spacing defined in section 5.4.1A of 3GPP TS 36.521. For non-contiguous intra-band CA, the downlink channel spacing between the component carriers was set to be larger than the nominal channel spacing and provided maximum separation between the component carriers.
- All selected PCC and SCC(s) remained fully within the uplink/downlink transmission band of the respective component carrier.

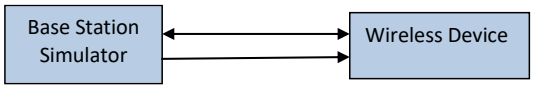

Figure I-1
DL CA Power Measurement Setup

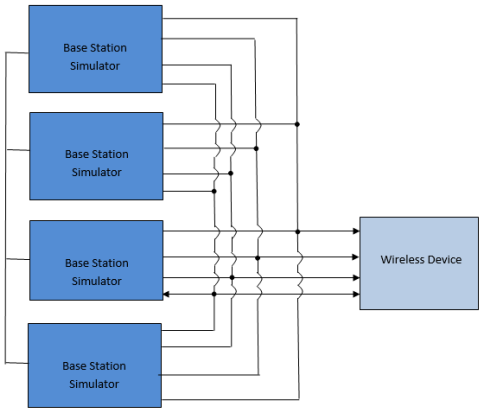

Figure I-2
DL CA with DL 4x4 MIMO Power Measurement Setup

I.2 Downlink Carrier Aggregation RF Conducted Powers

I.2.1 LTE Band 71 as PCC

Table I-3
Maximum Output Powers

	PCC									SCC 1				SCC 2				SCC 3				Power	
Combination	PCC Band	PCC BW [MHz]	PCC (UL) Ch.	PCC (UL) Freq. [MHz]	Mod.	PCC UL# RB	PCC UL RB Offset	PCC (DL) Channel	PCC (DL) Freq. [MHz]	SCC Band	SCC BW [MHz]	SCC (DL) Channel	SCC (DL) Freq. [MHz]	SCC Band	SCC BW [MHz]	SCC (DL) Channel	SCC (DL) Freq. [MHz]	SCC Band	SCC BW [MHz]	SCC (DL) Channel	SCC (DL) Freq. [MHz]	LTE Tx.Power with DL CA Enabled (dBm)	LTE Single Carrier Tx Power (dBm)
CA_4A-4A-71A	LTE B71	5	133447	695.5	QPSK	1	12	68911	649.5	LTE B4	20	2175	2132.5	LTE B4	10	2350	2150	-	-	-	-	24.16	24.01
CA_48A-48A-71A	LTE B71	5	133447	695.5	QPSK	1	12	68911	649.5	LTE B48	20	55990	3625	LTE B48	20	56640	3690	-	-	-	-	24.00	24.01
CA_48C-71A	LTE B71	5	133447	695.5	QPSK	1	12	68911	649.5	LTE B48	20	55990	3625	LTE B48	20	56188	3644.8	-	-	-	-	23.99	24.01
CA_2A-2A-4A-71A	LTE B71	5	133447	695.5	QPSK	1	12	68911	649.5	LTE B2	20	900	1960	LTE B2	20	700	1940	LTE B4	20	2175	2132.5	24.02	24.01
CA_2A-2A-66A-71A	LTE B71	5	133447	695.5	QPSK	1	12	68911	649.5	LTE B2	20	900	1960	LTE B2	20	700	1940	LTE B66	20	66786	2145	24.04	24.01
CA_2A-66A-66A-71A	LTE B71	5	133447	695.5	QPSK	1	12	68911	649.5	LTE B2	20	900	1960	LTE B66	20	66786	2145	LTE B66	20	67236	2190	24.16	24.01
CA_2A-66C-71A	LTE B71	5	133447	695.5	QPSK	1	12	68911	649.5	LTE B2	20	900	1960	LTE B66	20	66786	2145	LTE B66	20	66984	2164.8	24.14	24.01

I.2.2 LTE Band 12 as PCC

Table I-4
Maximum Output Powers

	PCC									SCC 1				SCC 2				SCC 3				SCC 4				Power	
Combination	PCC Band	PCC BW [MHz]	PCC (UL) Ch.	PCC (UL) Freq. [MHz]	Mod.	PCC UL# RB	PCC UL RB Offset	PCC (DL) Channel	PCC (DL) Freq. [MHz]	SCC Band	SCC BW [MHz]	SCC (DL) Channel	SCC (DL) Freq. [MHz]	SCC Band	SCC BW [MHz]	SCC (DL) Channel	SCC (DL) Freq. [MHz]	SCC Band	SCC BW [MHz]	SCC (DL) Channel	SCC (DL) Freq. [MHz]	SCC Band	SCC BW [MHz]	SCC (DL) Channel	SCC (DL) Freq. [MHz]	LTE Tx.Power with DL CA Enabled (dBm)	LTE Single Carrier Tx Power (dBm)
CA_2A-12A (1)	LTE B12	5	23035	701.5	QPSK	1	0	5035	731.5	LTE B2	20	900	1960	-	-	-	-	-	-	-	-	-	-	-	-	24.24	24.27
CA_4A-12A (1)	LTE B12	5	23035	701.5	QPSK	1	0	5035	731.5	LTE B4	20	2175	2132.5	-	-	-	-	-	-	-	-	-	-	-	-	24.25	24.27
CA_4A-12A (2)	LTE B12	5	23035	701.5	QPSK	1	0	5035	731.5	LTE B4	20	2175	2132.5	-	-	-	-	-	-	-	-	-	-	-	-	24.25	24.27
CA_12A-25A	LTE B12	5	23035	701.5	QPSK	1	0	5035	731.5	LTE B25	20	8365	1962.5	-	-	-	-	-	-	-	-	-	-	-	-	24.28	24.27
CA_12A-66A (1)	LTE B12	5	23035	701.5	QPSK	1	0	5035	731.5	LTE B66	20	66786	2145	-	-	-	-	-	-	-	-	-	-	-	-	24.27	24.27
CA_12A-66A (2)	LTE B12	5	23035	701.5	QPSK	1	0	5035	731.5	LTE B66	20	66786	2145	-	-	-	-	-	-	-	-	-	-	-	-	24.27	24.27
CA_2A-2A-4A-12A	LTE B12	5	23035	701.5	QPSK	1	0	5035	731.5	LTE B2	20	900	1960	LTE B2	20	700	1940	LTE B4	20	2175	2132.5	-	-	-	-	24.45	24.27
CA_2A-4A-4A-12A	LTE B12	5	23035	701.5	QPSK	1	0	5035	731.5	LTE B2	20	900	1960	LTE B4	20	2175	2132.5	LTE B4	10	2350	2150	-	-	-	-	24.43	24.27
CA_2A-4A-12B	LTE B12	5	23035	701.5	QPSK	1	0	5035	731.5	LTE B12	10	5107	738.7	LTE B2	20	900	1960	LTE B4	20	2175	2132.5	-	-	-	-	24.44	24.27
CA_2A-12A-66C	LTE B12	5	23035	701.5	QPSK	1	0	5035	731.5	LTE B2	20	900	1960	LTE B66	20	66786	2145	LTE B66	20	66984	2164.8	-	-	-	-	24.34	24.27
CA_4A-4A-12B	LTE B12	5	23035	701.5	QPSK	1	0	5035	731.5	LTE B12	10	5107	738.7	LTE B4	20	2175	2132.5	LTE B4	10	2350	2150	-	-	-	-	24.33	24.27
CA_2A-2A-12A-30A-66A	LTE B12	5	23035	701.5	QPSK	1	0	5035	731.5	LTE B2	20	900	1960	LTE B2	20	700	1940	LTE B30	10	9820	2355	LTE B66	20	66786	2145	24.48	24.27
CA_2A-2A-12A-66A-66A	LTE B12	5	23035	701.5	QPSK	1	0	5035	731.5	LTE B2	20	900	1960	LTE B2	20	700	1940	LTE B66	20	66786	2145	LTE B66	20	67236	2190	24.51	24.27
CA_2A-2A-12B-66A	LTE B12	5	23035	701.5	QPSK	1	0	5035	731.5	LTE B12	10	5107	738.7	LTE B2	20	900	1960	LTE B2	20	700	1940	LTE B66	20	66786	2145	24.51	24.27
CA_2A-12A-30A-66A-66A	LTE B12	5	23035	701.5	QPSK	1	0	5035	731.5	LTE B2	20	900	1960	LTE B30	10	9820	2355	LTE B66	20	66786	2145	LTE B66	20	67236	2190	24.49	24.27
CA_2A-12B-66A-66A	LTE B12	5	23035	701.5	QPSK	1	0	5035	731.5	LTE B12	10	5107	738.7	LTE B2	20	900	1960	LTE B66	20	66786	2145	LTE B66	20	67236	2190	24.50	24.27

I.2.3 LTE Band 13 as PCC

Table I-5
Maximum Output Powers

	PCC									SCC 1				SCC 2				SCC 3				SCC 4				Power	
Combination	PCC Band	PCC BW [MHz]	PCC (UL) Ch.	PCC (UL) Freq. [MHz]	Mod.	PCC UL# RB	PCC UL RB Offset	PCC (DL) Channel	PCC (DL) Freq. [MHz]	SCC Band	SCC BW [MHz]	SCC (DL) Channel	SCC (DL) Freq. [MHz]	SCC Band	SCC BW [MHz]	SCC (DL) Channel	SCC (DL) Freq. [MHz]	SCC Band	SCC BW [MHz]	SCC (DL) Channel	SCC (DL) Freq. [MHz]	SCC Band	SCC BW [MHz]	SCC (DL) Channel	SCC (DL) Freq. [MHz]	LTE Tx.Power with DL CA Enabled (dBm)	LTE Single Carrier Tx Power (dBm)
CA_2A-4A-13A	LTE B13	10	23230	782	QPSK	1	0	5230	751	LTE B2	20	900	1960	LTE B4	20	2175	2132.5	-	-	-	-	-	-	-	-	24.06	23.87
CA_4A-4A-13A	LTE B13	10	23230	782	QPSK	1	0	5230	751	LTE B4	20	2175	2132.5	LTE B4	10	2350	2150	-	-	-	-	-	-	-	-	24.05	23.87
CA_13A-48B	LTE B13	10	23230	782	QPSK	1	0	5230	751	LTE B48	10	55990	3625	LTE B48	10	56099	3634.9	-	-	-	-	-	-	-	-	23.93	23.87
CA_2A-13A-48A-66A	LTE B13	10	23230	782	QPSK	1	0	5230	751	LTE B2	20	900	1960	LTE B48	20	55990	3625	LTE B66	20	66786	2145	-	-	-	-	24.08	23.87
CA_2A-13A-66B	LTE B13	10	23230	782	QPSK	1	0	5230	751	LTE B2	20	900	1960	LTE B66	15	66786	2145	LTE B66	5	66879	2154.3	-	-	-	-	23.99	23.87
CA_2A-13A-66C	LTE B13	10	23230	782	QPSK	1	0	5230	751	LTE B2	20	900	1960	LTE B66	20	66786	2145	LTE B66	20	66984	2164.8	-	-	-	-	24.01	23.87
CA_13A-48A-66B	LTE B13	10	23230	782	QPSK	1	0	5230	751	LTE B48	20	55990	3625	LTE B66	15	66786	2145	LTE B66	5	66879	2154.3	-	-	-	-	24.04	23.87
CA_13A-48A-66C	LTE B13	10	23230	782	QPSK	1	0	5230	751	LTE B48	20	55990	3625	LTE B66	20	66786	2145	LTE B66	20	66984	2164.8	-	-	-	-	24.02	23.87
CA_2A-2A-13A-66A-66A	LTE B13	10	23230	782	QPSK	1	0	5230	751	LTE B2	20	900	1960	LTE B2	20	700	1940	LTE B66	20	66786	2145	LTE B66	20	67236	2190	23.96	23.87
CA_2A-13A-48C-66A	LTE B13	10	23230	782	QPSK	1	0	5230	751	LTE B2	20	900	1960	LTE B48	20	55990	3625	LTE B48	20	56188	3644.8	LTE B66	20	66786	2145	23.94	23.87
CA_2A-13A-48D	LTE B13	10	23230	782	QPSK	1	0	5230	751	LTE B2	20	900	1960	LTE B48	20	55990	3625	LTE B48	20	56188	3644.8	LTE B48	20	56386	3664.6	23.93	23.87
CA_13A-48D-66A	LTE B13	10	23230	782	QPSK	1	0	5230	751	LTE B48	20	55990	3625	LTE B48	20	56188	3644.8	LTE B48	20	56386	3664.6	LTE B66	20	66786	2145	23.94	23.87
CA_13A-48E	LTE B13	10	23230	782	QPSK	1	0	5230	751	LTE B48	20	55990	3625	LTE B48	20	56188	3644.8	LTE B48	20	56386	3664.6	LTE B48	20	56584	3684.4	23.95	23.87

I.2.4 LTE Band 14 as PCC

Table I-6
Maximum Output Powers

	PCC									SCC 1				SCC 2				SCC 3				SCC 4				Power	
Combination	PCC Band	PCC BW [MHz]	PCC (UL) Ch.	PCC (UL) Freq. [MHz]	Mod.	PCC UL# RB	PCC UL RB Offset	PCC (DL) Channel	PCC (DL) Freq. [MHz]	SCC Band	SCC BW [MHz]	SCC (DL) Channel	SCC (DL) Freq. [MHz]	SCC Band	SCC BW [MHz]	SCC (DL) Channel	SCC (DL) Freq. [MHz]	SCC Band	SCC BW [MHz]	SCC (DL) Channel	SCC (DL) Freq. [MHz]	SCC Band	SCC BW [MHz]	SCC (DL) Channel	SCC (DL) Freq. [MHz]	LTE Tx.Power with DL CA Enabled (dBm)	LTE Single Carrier Tx Power (dBm)
CA_2A-2A-14A-30A-66A	LTE B14	10	23330	793	QPSK	1	25	5330	763	LTE B2	20	900	1960	LTE B2	20	700	1940	LTE B30	10	9820	2355	LTE B66	20	66786	2145	23.84	23.77
CA_2A-2A-14A-66A-66A	LTE B14	10	23330	793	QPSK	1	25	5330	763	LTE B2	20	900	1960	LTE B2	20	700	1940	LTE B66	20	66786	2145	LTE B66	20	67236	2190	23.83	23.77
CA_2A-14A-30A-66A-66A	LTE B14	10	23330	793	QPSK	1	25	5330	763	LTE B2	20	900	1960	LTE B30	10	9820	2355	LTE B66	20	66786	2145	LTE B66	20	67236	2190	23.95	23.77

I.2.5 LTE Band 66 as PCC

Table I-7
Maximum Output Powers

	PCC									SCC 1					SCC 2					SCC 3					SCC 4					SCC 5				Power	
Combination	PCC Band	PCC BW [MHz]	PCC (UL) Ch.	PCC (UL) Freq. [MHz]	Mod.	PCC UL# RB	PCC UL RB Offset	PCC (DL) Channel	PCC (DL) Freq. [MHz]	SCC Band	SCC BW [MHz]	SCC (DL) Channel	SCC (DL) Freq. [MHz]	SCC Band	SCC BW [MHz]	SCC (DL) Channel	SCC (DL) Freq. [MHz]	SCC Band	SCC BW [MHz]	SCC (DL) Channel	SCC (DL) Freq. [MHz]	SCC Band	SCC BW [MHz]	SCC (DL) Channel	SCC (DL) Freq. [MHz]	SCC Band	SCC BW [MHz]	SCC (DL) Channel	SCC (DL) Freq. [MHz]	LTE Tx.Power with DL CA Enabled (dBm)	LTE Single Carrier Tx Power (dBm)
CA_12A-66A (1)	LTE B66	5	131997	1712.5	QPSK	1	12	66461	2112.5	LTE B12	10	5095	737.5	-	-	-	-	-	-	-	-	-	-	-	-	-	-	-	-	23.42	23.66
CA_12A-66A (2)	LTE B66	5	131997	1712.5	QPSK	1	12	66461	2112.5	LTE B12	10	5095	737.5	-	-	-	-	-	-	-	-	-	-	-	-	-	-	-	-	23.42	23.66
CA_48B-66A	LTE B66	5	132522	1745	QPSK	1	12	66786	2145	LTE B48	10	55990	3625	LTE B48	10	56089	3634.9	-	-	-	-	-	-	-	-	-	-	-	-	23.61	23.66
CA_2A-2A-66A-71A	LTE B66	5	131997	1712.5	QPSK	1	12	66461	2112.5	LTE B2	20	900	1960	LTE B2	20	700	1940	LTE B71	20	68761	634.5	-	-	-	-	-	-	-	-	23.71	23.66
CA_2A-5A-48A-66A	LTE B66	5	131997	1712.5	QPSK	1	12	66461	2112.5	LTE B2	20	900	1960	LTE B5	10	2525	881.5	LTE B48	20	55990	3625	-	-	-	-	-	-	-	-	23.77	23.66
CA_2A-12A-66C	LTE B66	5	131997	1712.5	QPSK	1	12	66461	2112.5	LTE B66	20	66578	2124.2	LTE B2	20	900	1960	LTE B12	10	5095	737.5	-	-	-	-	-	-	-	-	23.70	23.66
CA_2A-13A-48A-66A	LTE B66	5	131997	1712.5	QPSK	1	12	66461	2112.5	LTE B2	20	900	1960	LTE B13	10	5230	751	LTE B48	20	55990	3625	-	-	-	-	-	-	-	-	23.72	23.66
CA_2A-13A-66B	LTE B66	5	131997	1712.5	QPSK	1	12	66461	2112.5	LTE B66	15	66554	2121.8	LTE B2	20	900	1960	LTE B13	10	5230	751	-	-	-	-	-	-	-	-	23.72	23.66
CA_2A-13A-66C	LTE B66	5	131997	1712.5	QPSK	1	12	66461	2112.5	LTE B66	20	66578	2124.2	LTE B2	20	900	1960	LTE B13	10	5230	751	-	-	-	-	-	-	-	-	23.73	23.66
CA_2A-48A-48A-66A	LTE B66	5	131997	1712.5	QPSK	1	12	66461	2112.5	LTE B2	20	900	1960	LTE B48	20	55990	3625	LTE B48	20	55340	3560	-	-	-	-	-	-	-	-	23.67	23.66
CA_2A-66A-66A-71A	LTE B66	5	131997	1712.5	QPSK	1	12	66461	2112.5	LTE B66	20	67236	2190	LTE B2	20	900	1960	LTE B71	20	68761	634.5	-	-	-	-	-	-	-	-	23.71	23.66
CA_2C-66A-66A	LTE B66	5	131997	1712.5	QPSK	1	12	66461	2112.5	LTE B66	20	67236	2190	LTE B2	20	900	1960	LTE B2	20	702	1940.2	-	-	-	-	-	-	-	-	23.70	23.66
CA_2A-66C-71A	LTE B66	5	131997	1712.5	QPSK	1	12	66461	2112.5	LTE B66	20	66578	2124.2	LTE B2	20	900	1960	LTE B71	20	68761	634.5	-	-	-	-	-	-	-	-	23.69	23.66
CA_13A-48A-66B	LTE B66	5	131997	1712.5	QPSK	1	12	66461	2112.5	LTE B66	15	66554	2121.8	LTE B13	10	5230	751	LTE B48	20	55990	3625	-	-	-	-	-	-	-	-	23.72	23.66
CA_13A-48A-66C	LTE B66	5	131997	1712.5	QPSK	1	12	66461	2112.5	LTE B66	20	66578	2124.2	LTE B13	10	5230	751	LTE B48	20	55990	3625	-	-	-	-	-	-	-	-	23.74	23.66
CA_29A-30A-66A-66A	LTE B66	5	131997	1712.5	QPSK	1	12	66461	2112.5	LTE B66	20	67236	2190	LTE B29	10	9715	722.5	LTE B30	10	9820	2355	-	-	-	-	-	-	-	-	23.75	23.66
CA_48A-48A-66A-66A	LTE B66	5	131997	1712.5	QPSK	1	12	66461	2112.5	LTE B66	20	67236	2190	LTE B48	20	55990	3625	LTE B48	20	55340	3560	-	-	-	-	-	-	-	-	23.69	23.66
CA_48C-66B	LTE B66	5	131997	1712.5	QPSK	1	12	66461	2112.5	LTE B66	15	67261	2192.5	LTE B48	20	55990	3625	LTE B48	20	56188	3644.8	-	-	-	-	-	-	-	-	23.70	23.66
CA_48C-66C	LTE B66	5	131997	1712.5	QPSK	1	12	66461	2112.5	LTE B66	20	66578	2124.2	LTE B48	20	55990	3625	LTE B48	20	56188	3644.8	-	-	-	-	-	-	-	-	23.71	23.66
CA_2A-2A-5A-30A-66A	LTE B66	5	131997	1712.5	QPSK	1	12	66461	2112.5	LTE B2	20	900	1960	LTE B2	20	700	1940	LTE B5	10	2525	881.5	LTE B30	10	9820	2355	-	-	-	-	23.72	23.66
CA_2A-2A-5A-66A-66A	LTE B66	5	131997	1712.5	QPSK	1	12	66461	2112.5	LTE B66	20	67236	2190	LTE B2	20	900	1960	LTE B2	20	700	1940	LTE B5	10	2525	881.5	-	-	-	-	23.70	23.66
CA_2A-2A-5A-66B	LTE B66	5	131997	1712.5	QPSK	1	12	66461	2112.5	LTE B66	15	66554	2121.8	LTE B2	20	900	1960	LTE B2	20	700	1940	LTE B5	10	2525	881.5	-	-	-	-	23.71	23.66
CA_2A-2A-5A-66C	LTE B66	5	131997	1712.5	QPSK	1	12	66461	2112.5	LTE B66	20	66578	2124.2	LTE B2	20	900	1960	LTE B2	20	700	1940	LTE B5	10	2525	881.5	-	-	-	-	23.72	23.66
CA_2A-2A-12A-30A-66A	LTE B66	5	131997	1712.5	QPSK	1	12	66461	2112.5	LTE B2	20	900	1960	LTE B2	20	700	1940	LTE B12	10	5095	737.5	LTE B30	10	9820	2355	-	-	-	-	23.74	23.66
CA_2A-2A-12A-66A-66A	LTE B66	5	131997	1712.5	QPSK	1	12	66461	2112.5	LTE B66	20	67236	2190	LTE B2	20	900	1960	LTE B2	20	700	1940	LTE B12	10	5095	737.5	-	-	-	-	23.85	23.66
CA_2A-2A-12B-66A	LTE B66	5	131997	1712.5	QPSK	1	12	66461	2112.5	LTE B2	20	900	1960	LTE B2	20	700	1940	LTE B12	5	5095	737.5	LTE B12	5	5047	732.7	-	-	-	-	23.54	23.66
CA_2A-2A-13A-66A-66A	LTE B66	5	131997	1712.5	QPSK	1	12	66461	2112.5	LTE B66	20	67236	2190	LTE B2	20	900	1960	LTE B2	20	700	1940	LTE B13	10	5230	751	-	-	-	-	23.53	23.66
CA_2A-2A-14A-30A-66A	LTE B66	5	131997	1712.5	QPSK	1	12	66461	2112.5	LTE B2	20	900	1960	LTE B2	20	700	1940	LTE B14	10	5330	763	LTE B30	10	9820	2355	-	-	-	-	23.44	23.66
CA_2A-2A-14A-66A-66A	LTE B66	5	131997	1712.5	QPSK	1	12	66461	2112.5	LTE B66	20	67236	2190	LTE B2	20	900	1960	LTE B2	20	700	1940	LTE B14	10	5330	763	-	-	-	-	23.82	23.66
CA_2A-2A-29A-30A-66A	LTE B66	5	131997	1712.5	QPSK	1	12	66461	2112.5	LTE B2	20	900	1960	LTE B2	20	700	1940	LTE B29	10	9715	722.5	LTE B30	10	9820	2355	-	-	-	-	23.79	23.66
CA_2A-2A-29A-66A-66A	LTE B66	5	131997	1712.5	QPSK	1	12	66461	2112.5	LTE B66	20	67236	2190	LTE B2	20	900	1960	LTE B2	20	700	1940	LTE B29	10	9715	722.5	-	-	-	-	23.81	23.66
CA_2A-5A-30A-66A-66A	LTE B66	5	131997	1712.5	QPSK	1	12	66461	2112.5	LTE B66	20	67236	2190	LTE B2	20	900	1960	LTE B5	10	2525	881.5	LTE B30	10	9820	2355	-	-	-	-	23.77	23.66
CA_2A-5A-48A-66A-66A	LTE B66	5	131997	1712.5	QPSK	1	12	66461	2112.5	LTE B66	20	67236	2190	LTE B2	20	900	1960	LTE B5	10	2525	881.5	LTE B48	20	55990	3625	-	-	-	-	23.78	23.66
CA_2A-5A-48C-66A	LTE B66	5	131997	1712.5	QPSK	1	12	66461	2112.5	LTE B2	20	900	1960	LTE B5	10	2525	881.5	LTE B48	20	55990	3625	LTE B48	20	56188	3644.8	-	-	-	-	23.80	23.66
CA_2A-12A-30A-66A-66A	LTE B66	5	131997	1712.5	QPSK	1	12	66461	2112.5	LTE B66	20	67236	2190	LTE B2	20	900	1960	LTE B12	10	5095	737.5	LTE B30	10	9820	2355	-	-	-	-	23.78	23.66
CA_2A-12B-66A-66A	LTE B66	5	131997	1712.5	QPSK	1	12	66461	2112.5	LTE B66	20	67236	2190	LTE B2	20	900	1960	LTE B12	5	5095	737.5	LTE B12	5	5047	732.7	-	-	-	-	23.77	23.66
CA_2A-13A-48C-66A	LTE B66	5	131997	1712.5	QPSK	1	12	66461	2112.5	LTE B2	20	900	1960	LTE B13	10	5230	751	LTE B48	20	55990	3625	LTE B48	20	56188	3644.8	-	-	-	-	23.85	23.66
CA_2A-14A-30A-66A-66A	LTE B66	5	131997	1712.5	QPSK	1	12	66461	2112.5	LTE B66	20	67236	2190	LTE B2	20	900	1960	LTE B14	10	5330	763	LTE B30	10	9820	2355	-	-	-	-	23.79	23.66
CA_2A-48A-48C-66A	LTE B66	5	131997	1712.5	QPSK	1	12	66461	2112.5	LTE B2	20	900	1960	LTE B48	20	55990	3625	LTE B48	20	56640	3690	LTE B48	20	56442	3670.2	-	-	-	-	23.64	23.66
CA_2A-48D-66A	LTE B66	5	131997	1712.5	QPSK	1	12	66461	2112.5	LTE B2	20	900	1960	LTE B48	20	55990	3625	LTE B48	20	56188	3644.8	LTE B48	20	56386	3664.6	-	-	-	-	23.76	23.66
CA_5A-48D-66A	LTE B66	5	131997	1712.5	QPSK	1	12	66461	2112.5	LTE B5	10	2525	881.5	LTE B48	20	55990	3625	LTE B48	20	56188	3644.8	LTE B48	20	56386	3664.6	-	-	-	-	23.77	23.66
CA_13A-48D-66A	LTE B66	5	131997	1712.5	QPSK	1	12	66461	2112.5	LTE B13	10	5230	751	LTE B48	20	55990	3625	LTE B48	20	56188	3644.8	LTE B48	20	56386	3664.6	-	-	-	-	23.75	23.66
CA_48C-48C-66A	LTE B66	5	131997	1712.5	QPSK	1	12	66461	2112.5	LTE B48	20	55990	3625	LTE B48	20	56188	3644.8	LTE B48	20	55340	3560	LTE B48	20	55538	3579.8	-	-	-	-	23.68	23.66
CA_48A-48D-66A	LTE B66	5	131997	1712.5	QPSK	1	12	66461	2112.5	LTE B48	20	55990	3625	LTE B48	20	56640	3690	LTE B48	20	56442	3670.2	LTE B48	20	56244	3650.4	-	-	-	-	23.78	23.66
CA_48E-66A	LTE B66	5	131997	1712.5	QPSK	1	12	66461	2112.5	LTE B48	20	55990	3625	LTE B48	20	56188	3644.8	LTE B48	20	56386	3664.6	LTE B48	20	56584	3684.4	-	-	-	-	23.79	23.66
CA_2A-5A-48C-66A-66A	LTE B66	5	131997	1712.5	QPSK	1	12	66461	2112.5	LTE B66	20	67236	2190	LTE B2	20	900	1960	LTE B5	10	2525	881.5	LTE B48	20	55990	3625	LTE B48	20	56188	3644.8	23.68	23.66
CA_2A-48E-66A	LTE B66	5	131997	1712.5	QPSK	1	12	66461	2112.5	LTE B2	20	900	1960	LTE B48	20	55990	3625	LTE B48	20	56188	3644.8	LTE B48	20	56386	3664.6	LTE B48	20	55792	3605.2	23.67	23.66
CA_5A-48D-66A-66A	LTE B66	5	131997	1712.5	QPSK	1	12	66461	2112.5	LTE B66	20	67236	2190	LTE B5	10	2525	881.5	LTE B48	20	55990	3625	LTE B48	20	56188	3644.8	LTE B48	20	56386	3664.6	23.69	23.66

I.2.6 LTE Band 25 as PCC

Table I-8
Maximum Output Powers

	PCC									SCC 1				SCC 2				SCC 3				Power	
Combination	PCC Band	PCC BW [MHz]	PCC (UL) Ch.	PCC (UL) Freq. [MHz]	Mod.	PCC UL# RB	PCC UL RB Offset	PCC (DL) Channel	PCC (DL) Freq. [MHz]	SCC Band	SCC BW [MHz]	SCC (DL) Channel	SCC (DL) Freq. [MHz]	SCC Band	SCC BW [MHz]	SCC (DL) Channel	SCC (DL) Freq. [MHz]	SCC Band	SCC BW [MHz]	SCC (DL) Channel	SCC (DL) Freq. [MHz]	LTE Tx.Power with DL CA Enabled (dBm)	LTE Single Carrier Tx Power (dBm)
CA_5A-25A	LTE B25	5	26665	1912.5	QPSK	1	24	8665	1992.5	LTE B5	10	2525	881.5	-	-	-	-	-	-	-	-	23.79	23.88
CA_12A-25A	LTE B25	5	26665	1912.5	QPSK	1	24	8665	1992.5	LTE B12	10	5095	737.5	-	-	-	-	-	-	-	-	23.78	23.88
CA_25A-25A (1)	LTE B25	5	26665	1912.5	QPSK	1	24	8665	1992.5	LTE B25	20	8140	1940	-	-	-	-	-	-	-	-	23.80	23.88
CA_25A-41A	LTE B25	5	26665	1912.5	QPSK	1	24	8665	1992.5	LTE B41	20	40620	2593	-	-	-	-	-	-	-	-	23.92	23.88
CA_25A-41C	LTE B25	5	26665	1912.5	QPSK	1	24	8665	1992.5	LTE B41	20	40620	2593	LTE B41	20	40422	2573.2	-	-	-	-	23.85	23.88
CA_25A-41D	LTE B25	5	26665	1912.5	QPSK	1	24	8665	1992.5	LTE B41	20	40422	2573.2	LTE B41	20	40620	2593	LTE B41	20	40818	2612.8	23.91	23.88

I.2.7 LTE Band 30 as PCC

Table I-9
Maximum Output Powers

	PCC									SCC 1				SCC 2				SCC 3				SCC 4				Power	
Combination	PCC Band	PCC BW [MHz]	PCC (UL) Ch.	PCC (UL) Freq. [MHz]	Mod.	PCC UL# RB	PCC UL RB Offset	PCC (DL) Channel	PCC (DL) Freq. [MHz]	SCC Band	SCC BW [MHz]	SCC (DL) Channel	SCC (DL) Freq. [MHz]	SCC Band	SCC BW [MHz]	SCC (DL) Channel	SCC (DL) Freq. [MHz]	SCC Band	SCC BW [MHz]	SCC (DL) Channel	SCC (DL) Freq. [MHz]	SCC Band	SCC BW [MHz]	SCC (DL) Channel	SCC (DL) Freq. [MHz]	LTE Tx.Power with DL CA Enabled (dBm)	LTE Single Carrier Tx Power (dBm)
CA_29A-30A-66A-66A	LTE B30	5	27710	2310	QPSK	1	24	9820	2355	LTE B29	10	9715	722.5	LTE B66	20	66786	2145	LTE B66	20	67236	2190	-	-	-	-	22.68	22.55
CA_2A-2A-5A-30A-66A	LTE B30	5	27710	2310	QPSK	1	24	9820	2355	LTE B2	20	900	1960	LTE B2	20	700	1940	LTE B5	10	2525	881.5	LTE B66	20	66786	2145	22.71	22.55
CA_2A-2A-12A-30A-66A	LTE B30	5	27710	2310	QPSK	1	24	9820	2355	LTE B2	20	900	1960	LTE B2	20	700	1940	LTE B12	10	5095	737.5	LTE B66	20	66786	2145	22.69	22.55
CA_2A-2A-14A-30A-66A	LTE B30	5	27710	2310	QPSK	1	24	9820	2355	LTE B2	20	900	1960	LTE B2	20	700	1940	LTE B14	10	5330	763	LTE B66	20	66786	2145	22.49	22.55
CA_2A-2A-29A-30A-66A	LTE B30	5	27710	2310	QPSK	1	24	9820	2355	LTE B2	20	900	1960	LTE B2	20	700	1940	LTE B29	10	9715	722.5	LTE B66	20	66786	2145	22.47	22.55
CA_2A-5A-30A-66A-66A	LTE B30	5	27710	2310	QPSK	1	24	9820	2355	LTE B2	20	900	1960	LTE B5	10	2525	881.5	LTE B66	20	66786	2145	LTE B66	20	67236	2190	22.50	22.55
CA_2A-12A-30A-66A-66A	LTE B30	5	27710	2310	QPSK	1	24	9820	2355	LTE B2	20	900	1960	LTE B12	10	5095	737.5	LTE B66	20	66786	2145	LTE B66	20	67236	2190	22.48	22.55
CA_2A-14A-30A-66A-66A	LTE B30	5	27710	2310	QPSK	1	24	9820	2355	LTE B2	20	900	1960	LTE B14	10	5330	763	LTE B66	20	66786	2145	LTE B66	20	67236	2190	22.46	22.55

I.2.8 LTE Band 41 as PCC

Table I-10
Maximum Output Powers

	PCC									SCC 1				SCC 2				Power	
Combination	PCC Band	PCC BW [MHz]	PCC (UL) Ch.	PCC (UL) Freq. [MHz]	Mod.	PCC UL# RB	PCC UL RB Offset	PCC (DL) Channel	PCC (DL) Freq. [MHz]	SCC Band	SCC BW [MHz]	SCC (DL) Channel	SCC (DL) Freq. [MHz]	SCC Band	SCC BW [MHz]	SCC (DL) Channel	SCC (DL) Freq. [MHz]	LTE Tx.Power with DL CA Enabled (dBm)	LTE Single Carrier Tx Power (dBm)
CA_41A-41A (1)	LTE B41	20	41490	2680	QPSK	1	50	41490	2680	LTE B41	20	39750	2506	-	-	-	-	23.96	24.17
CA_41A-41C	LTE B41	20	41490	2680	QPSK	1	50	41490	2680	LTE B41	20	39948	2525.8	LTE B41	20	39750	2506	24.30	24.17
CA_41C-41A	LTE B41	20	41490	2680	QPSK	1	50	41490	2680	LTE B41	20	41292	2660.2	LTE B41	20	39750	2506	24.23	24.17
CA_41D	LTE B41	20	41490	2680	QPSK	1	50	41490	2680	LTE B41	20	41292	2660.2	LTE B41	20	41094	2640.4	24.18	24.17

I.2.9 LTE Band 48 as PCC

Table I-11
Maximum Output Powers

	PCC									SCC 1				SCC 2				SCC 3				SCC 4				Power	
Combination	PCC Band	PCC BW [MHz]	PCC (UL) Ch.	PCC (UL) Freq. [MHz]	Mod.	PCC UL# RB	PCC UL RB Offset	PCC (DL) Channel	PCC (DL) Freq. [MHz]	SCC Band	SCC BW [MHz]	SCC (DL) Channel	SCC (DL) Freq. [MHz]	SCC Band	SCC BW [MHz]	SCC (DL) Channel	SCC (DL) Freq. [MHz]	SCC Band	SCC BW [MHz]	SCC (DL) Channel	SCC (DL) Freq. [MHz]	SCC Band	SCC BW [MHz]	SCC (DL) Channel	SCC (DL) Freq. [MHz]	LTE Tx.Power with DL CA Enabled (dBm)	LTE Single Carrier Tx Power (dBm)
CA_48A-48A	LTE B48	20	55340	3560	QPSK	1	0	55340	3560	LTE B48	20	56640	3690	-	-	-	-	-	-	-	-	-	-	-	-	22.00	22.08
CA_48B	LTE B48	15	55765	3602.5	QPSK	1	74	55765	3602.5	LTE B48	5	55858	3611.8	-	-	-	-	-	-	-	-	-	-	-	-	22.16	22.05
CA_48A-48C	LTE B48	20	55340	3560	QPSK	1	0	55340	3560	LTE B48	20	56640	3690	LTE B48	20	56442	3670.2	-	-	-	-	-	-	-	-	22.16	22.08
CA_48C-48A	LTE B48	20	55340	3560	QPSK	1	0	55340	3560	LTE B48	20	55538	3579.8	LTE B48	20	56640	3690	-	-	-	-	-	-	-	-	22.19	22.08
CA_48A-48D	LTE B48	20	55340	3560	QPSK	1	0	55340	3560	LTE B48	20	56640	3690	LTE B48	20	56442	3670.2	LTE B48	20	56244	3650.4	-	-	-	-	22.14	22.08
CA_48D-48A	LTE B48	20	55340	3560	QPSK	1	0	55340	3560	LTE B48	20	55538	3579.8	LTE B48	20	55736	3599.6	LTE B48	20	56640	3690	-	-	-	-	22.18	22.08
CA_48C-48C	LTE B48	20	55340	3560	QPSK	1	0	55340	3560	LTE B48	20	55538	3579.8	LTE B48	20	56640	3690	LTE B48	20	56442	3670.2	-	-	-	-	22.13	22.08
CA_48A-48E	LTE B48	20	55340	3560	QPSK	1	0	55340	3560	LTE B48	20	56640	3690	LTE B48	20	56442	3670.2	LTE B48	20	56244	3650.4	LTE B48	20	56046	3630.6	22.10	22.08
CA_48E-48A	LTE B48	20	55340	3560	QPSK	1	0	55340	3560	LTE B48	20	55538	3579.8	LTE B48	20	55736	3599.6	LTE B48	20	55934	3619.4	LTE B48	20	56640	3690	22.15	22.08
CA_48C-48D	LTE B48	20	55340	3560	QPSK	1	0	55340	3560	LTE B48	20	55538	3579.8	LTE B48	20	56640	3690	LTE B48	20	56442	3670.2	LTE B48	20	56244	3650.4	22.03	22.08
CA_48D-48C	LTE B48	20	55340	3560	QPSK	1	0	55340	3560	LTE B48	20	55538	3579.8	LTE B48	20	55736	3599.6	LTE B48	20	56640	3690	LTE B48	20	56442	3670.2	22.01	22.08

I.3 DL CA with DL 4x4 MIMO RF Conduction Powers

This device supports downlink 4x4 MIMO operations for some LTE bands. Uplink transmission is limited to a single output stream. When carrier aggregation was applicable, the general test selection and setup procedures described in Section I.1 were applied.

Per May 2017 TCB Workshop Notes, SAR for 4x4 DL MIMO was not needed since the maximum average output power in 4x4 DL MIMO mode was not more than 0.25 dB higher than the maximum output power with 4x4 DL MIMO inactive. Additionally, SAR for 4x4 MIMO Downlink Carrier Aggregation was not needed since the maximum average output power in 4x4 MIMO Downlink Carrier Aggregation mode was not more than 0.25 dB higher than the maximum output power with 4x4 MIMO Downlink and downlink carrier aggregation inactive.

I.3.1 LTE 4x4 MIMO DL Standalone Powers

Table I-12
Maximum Output Powers

LTE Band	Bandwidth [MHz]	Channel	Frequency [MHz]	Modulation	RB Size	RB Offset	4x4 DL MIMO Tx. Power [dBm]	Single Antenna Tx. Power [dBm]	Target Power [dBm]
66	5	131997	1712.5	QPSK	1	12	23.70	23.66	23.5
25	5	26665	1912.5	QPSK	1	24	23.82	23.88	23.5
30	5	27710	2310	QPSK	1	24	22.44	22.55	22.5
41	20	41490	2680	QPSK	1	50	24.16	24.17	24.0
48	20	55340	3560	QPSK	1	0	21.88	22.08	22.0

I.3.1 LTE Band 71 as PCC

Table I-13
Maximum Output Powers

	PCC										SCC 1					SCC 2					SCC 3					Power	
Combination	PCC Band	PCC BW [MHz]	PCC (UL) Ch.	PCC (UL) Freq. [MHz]	Mod.	PCC UL# RB	PCC UL RB Offset	PCC (DL) Ch.	PCC (DL) Freq. [MHz]	DL Ant. Config.	SCC Band	SCC BW [MHz]	SCC (DL) Ch.	SCC (DL) Freq. [MHz]	DL Ant. Config.	SCC Band	SCC BW [MHz]	SCC (DL) Ch.	SCC (DL) Freq. [MHz]	DL Ant. Config.	SCC Band	SCC BW [MHz]	SCC (DL) Ch.	SCC (DL) Freq. [MHz]	DL Ant. Config.	LTE Tx.Power with DL CA Enabled (dBm)	LTE Single Carrier Tx Power (dBm)
CA_[4A]-4A-71A	LTE B71	5	133447	695.5	QPSK	1	12	68911	649.5	2x2	LTE B4	20	2175	2132.5	4x4	LTE B4	10	2350	2150	2x2	-	-	-	-	-	24.03	24.01
CA_[4A]-[4A]-71A	LTE B71	5	133447	695.5	QPSK	1	12	68911	649.5	2x2	LTE B4	20	2175	2132.5	4x4	LTE B4	10	2350	2150	4x4	-	-	-	-	-	24.02	24.01
CA_[48A]-48A-71A	LTE B71	5	133447	695.5	QPSK	1	12	68911	649.5	2x2	LTE B48	20	55990	3625	4x4	LTE B48	20	56640	3690	2x2	-	-	-	-	-	24.01	24.01
CA_[48A]-[48A]-71A	LTE B71	5	133447	695.5	QPSK	1	12	68911	649.5	2x2	LTE B48	20	55990	3625	4x4	LTE B48	20	55340	3560	4x4	-	-	-	-	-	24.00	24.01
CA_[48C]-71A	LTE B71	5	133447	695.5	QPSK	1	12	68911	649.5	2x2	LTE B48	20	55990	3625	4x4	LTE B48	20	56188	3644.8	4x4	-	-	-	-	-	24.03	24.01
CA_2A-2A-[4A]-71A	LTE B71	5	133447	695.5	QPSK	1	12	68911	649.5	2x2	LTE B2	20	900	1960	2x2	LTE B2	20	700	1940	2x2	LTE B4	20	2175	2132.5	4x4	23.99	24.01
CA_[2A]-2A-4A-71A	LTE B71	5	133447	695.5	QPSK	1	12	68911	649.5	2x2	LTE B2	20	900	1960	4x4	LTE B2	20	700	1940	2x2	LTE B4	20	2175	2132.5	2x2	23.98	24.01
CA_[2A]-2A-[4A]-71A	LTE B71	5	133447	695.5	QPSK	1	12	68911	649.5	2x2	LTE B2	20	900	1960	4x4	LTE B2	20	700	1940	2x2	LTE B4	20	2175	2132.5	4x4	24.02	24.01
CA_[2A]-[2A]-4A-71A	LTE B71	5	133447	695.5	QPSK	1	12	68911	649.5	2x2	LTE B2	20	900	1960	4x4	LTE B2	20	700	1940	4x4	LTE B4	20	2175	2132.5	2x2	24.00	24.01
CA_[2A]-[2A]-[4A]-71A	LTE B71	5	133447	695.5	QPSK	1	12	68911	649.5	2x2	LTE B2	20	900	1960	4x4	LTE B2	20	700	1940	4x4	LTE B4	20	2175	2132.5	4x4	24.03	24.01
CA_2A-2A-[66A]-71A	LTE B71	5	133447	695.5	QPSK	1	12	68911	649.5	2x2	LTE B2	20	900	1960	2x2	LTE B2	20	700	1940	2x2	LTE B66	20	66786	2145	4x4	24.05	24.01
CA_[2A]-2A-66A-71A	LTE B71	5	133447	695.5	QPSK	1	12	68911	649.5	2x2	LTE B2	20	900	1960	4x4	LTE B2	20	700	1940	2x2	LTE B66	20	66786	2145	2x2	24.03	24.01
CA_[2A]-2A-[66A]-71A	LTE B71	5	133447	695.5	QPSK	1	12	68911	649.5	2x2	LTE B2	20	900	1960	4x4	LTE B2	20	700	1940	2x2	LTE B66	20	66786	2145	4x4	24.04	24.01
CA_[2A]-[2A]-66A-71A	LTE B71	5	133447	695.5	QPSK	1	12	68911	649.5	2x2	LTE B2	20	900	1960	4x4	LTE B2	20	700	1940	4x4	LTE B66	20	66786	2145	2x2	24.00	24.01
CA_[2A]-[2A]-[66A]-71A	LTE B71	5	133447	695.5	QPSK	1	12	68911	649.5	2x2	LTE B2	20	900	1960	4x4	LTE B2	20	700	1940	4x4	LTE B66	20	66786	2145	4x4	24.03	24.01
CA_2A-[66A]-66A-71A	LTE B71	5	133447	695.5	QPSK	1	12	68911	649.5	2x2	LTE B2	20	900	1960	2x2	LTE B66	20	66786	2145	4x4	LTE B66	20	67236	2190	2x2	24.02	24.01
CA_2A-[66A]-[66A]-71A	LTE B71	5	133447	695.5	QPSK	1	12	68911	649.5	2x2	LTE B2	20	900	1960	2x2	LTE B66	20	66786	2145	4x4	LTE B66	20	67236	2190	4x4	24.04	24.01
CA_[2A]-66A-66A-71A	LTE B71	5	133447	695.5	QPSK	1	12	68911	649.5	2x2	LTE B2	20	900	1960	4x4	LTE B66	20	66786	2145	2x2	LTE B66	20	67236	2190	2x2	24.03	24.01
CA_[2A]-[66A]-66A-71A	LTE B71	5	133447	695.5	QPSK	1	12	68911	649.5	2x2	LTE B2	20	900	1960	4x4	LTE B66	20	66786	2145	4x4	LTE B66	20	67236	2190	2x2	24.00	24.01
CA_[2A]-[66A]-[66A]-71A	LTE B71	5	133447	695.5	QPSK	1	12	68911	649.5	2x2	LTE B2	20	900	1960	4x4	LTE B66	20	66786	2145	4x4	LTE B66	20	67236	2190	4x4	24.05	24.01
CA_2A-[66C]-71A	LTE B71	5	133447	695.5	QPSK	1	12	68911	649.5	2x2	LTE B2	20	900	1960	2x2	LTE B66	20	66786	2145	4x4	LTE B66	20	66984	2164.8	4x4	24.04	24.01
CA_[2A]-66C-71A	LTE B71	5	133447	695.5	QPSK	1	12	68911	649.5	2x2	LTE B2	20	900	1960	4x4	LTE B66	20	66786	2145	2x2	LTE B66	20	66984	2164.8	2x2	24.05	24.01
CA_[2A]-[66C]-71A	LTE B71	5	133447	695.5	QPSK	1	12	68911	649.5	2x2	LTE B2	20	900	1960	4x4	LTE B66	20	66786	2145	4x4	LTE B66	20	66984	2164.8	4x4	24.02	24.01

I.3.2 LTE Band 12 as PCC

Table I-14
Maximum Output Powers

	PCC										SCC 1					SCC 2					SCC 3					SCC 4					Power	
Combination	PCC Band	PCC BW [MHz]	PCC (UL) Ch.	PCC (UL) Freq. [MHz]	Mod.	PCC UL# RB	PCC UL RB Offset	PCC (DL) Ch.	PCC (DL) Freq. [MHz]	DL Ant. Config.	SCC Band	SCC BW [MHz]	SCC (DL) Ch.	SCC (DL) Freq. [MHz]	DL Ant. Config.	SCC Band	SCC BW [MHz]	SCC (DL) Ch.	SCC (DL) Freq. [MHz]	DL Ant. Config.	SCC Band	SCC BW [MHz]	SCC (DL) Ch.	SCC (DL) Freq. [MHz]	DL Ant. Config.	SCC Band	SCC BW [MHz]	SCC (DL) Ch.	SCC (DL) Freq. [MHz]	DL Ant. Config.	LTE Tx.Power with DL CA Enabled (dBm)	LTE Single Carrier Tx Power (dBm)
CA_[2A]-12A (1)	LTE B12	5	23035	701.5	QPSK	1	0	5035	731.5	2x2	LTE B2	20	900	1960	4x4	-	-	-	-	-	-	-	-	-	-	-	-	-	-	-	24.31	24.27
CA_[4A]-12A (1)	LTE B12	5	23035	701.5	QPSK	1	0	5035	731.5	2x2	LTE B4	20	2175	2132.5	4x4	-	-	-	-	-	-	-	-	-	-	-	-	-	-	-	24.35	24.27
CA_[4A]-12A (2)	LTE B12	5	23035	701.5	QPSK	1	0	5035	731.5	2x2	LTE B4	20	2175	2132.5	4x4	-	-	-	-	-	-	-	-	-	-	-	-	-	-	-	24.35	24.27
CA_12A-[25A]	LTE B12	5	23035	701.5	QPSK	1	0	5035	731.5	2x2	LTE B25	20	8365	1962.5	4x4	-	-	-	-	-	-	-	-	-	-	-	-	-	-	-	24.14	24.27
CA_12A-[66A] (1)	LTE B12	5	23035	701.5	QPSK	1	0	5035	731.5	2x2	LTE B66	20	66786	2145	4x4	-	-	-	-	-	-	-	-	-	-	-	-	-	-	-	24.21	24.27
CA_12A-[66A] (2)	LTE B12	5	23035	701.5	QPSK	1	0	5035	731.5	2x2	LTE B66	20	66786	2145	4x4	-	-	-	-	-	-	-	-	-	-	-	-	-	-	-	24.21	24.27
CA_2A-2A-[4A]-12A	LTE B12	5	23035	701.5	QPSK	1	0	5035	731.5	2x2	LTE B2	20	900	1960	2x2	LTE B2	20	700	1940	2x2	LTE B4	20	2175	2132.5	4x4	-	-	-	-	-	24.13	24.27
CA_[2A]-2A-4A-12A	LTE B12	5	23035	701.5	QPSK	1	0	5035	731.5	2x2	LTE B2	20	900	1960	4x4	LTE B2	20	700	1940	2x2	LTE B4	20	2175	2132.5	2x2	-	-	-	-	-	24.14	24.27
CA_[2A]-2A-[4A]-12A	LTE B12	5	23035	701.5	QPSK	1	0	5035	731.5	2x2	LTE B2	20	900	1960	4x4	LTE B2	20	700	1940	2x2	LTE B4	20	2175	2132.5	4x4	-	-	-	-	-	24.16	24.27
CA_[2A]-[2A]-4A-12A	LTE B12	5	23035	701.5	QPSK	1	0	5035	731.5	2x2	LTE B2	20	900	1960	4x4	LTE B2	20	700	1940	4x4	LTE B4	20	2175	2132.5	2x2	-	-	-	-	-	24.17	24.27
CA_[2A]-[2A]-[4A]-12A	LTE B12	5	23035	701.5	QPSK	1	0	5035	731.5	2x2	LTE B2	20	900	1960	4x4	LTE B2	20	700	1940	4x4	LTE B4	20	2175	2132.5	4x4	-	-	-	-	-	24.15	24.27
CA_2A-[4A]-4A-12A	LTE B12	5	23035	701.5	QPSK	1	0	5035	731.5	2x2	LTE B2	20	900	1960	2x2	LTE B4	20	2175	2132.5	4x4	LTE B4	10	2350	2150	2x2	-	-	-	-	-	23.35	24.27
CA_2A-[4A]-[4A]-12A	LTE B12	5	23035	701.5	QPSK	1	0	5035	731.5	2x2	LTE B2	20	900	1960	2x2	LTE B4	20	2175	2132.5	4x4	LTE B4	10	2350	2150	4x4	-	-	-	-	-	23.31	24.27
CA_[2A]-4A-4A-12A	LTE B12	5	23035	701.5	QPSK	1	0	5035	731.5	2x2	LTE B2	20	900	1960	4x4	LTE B4	20	2175	2132.5	2x2	LTE B4	10	2350	2150	2x2	-	-	-	-	-	23.29	24.27
CA_[2A]-[4A]-4A-12A	LTE B12	5	23035	701.5	QPSK	1	0	5035	731.5	2x2	LTE B2	20	900	1960	4x4	LTE B4	20	2175	2132.5	4x4	LTE B4	10	2350	2150	2x2	-	-	-	-	-	24.30	24.27
CA_[2A]-[4A]-[4A]-12A	LTE B12	5	23035	701.5	QPSK	1	0	5035	731.5	2x2	LTE B2	20	900	1960	4x4	LTE B4	20	2175	2132.5	4x4	LTE B4	10	2350	2150	4x4	-	-	-	-	-	24.34	24.27
CA_2A-[4A]-12B	LTE B12	5	23035	701.5	QPSK	1	0	5035	731.5	2x2	LTE B12	10	5107	738.7	2x2	LTE B2	20	900	1960	2x2	LTE B4	20	2175	2132.5	4x4	-	-	-	-	-	24.31	24.27
CA_[2A]-4A-12B	LTE B12	5	23035	701.5	QPSK	1	0	5035	731.5	2x2	LTE B12	10	5107	738.7	2x2	LTE B2	20	900	1960	4x4	LTE B4	20	2175	2132.5	2x2	-	-	-	-	-	24.30	24.27
CA_[2A]-[4A]-12B	LTE B12	5	23035	701.5	QPSK	1	0	5035	731.5	2x2	LTE B12	10	5107	738.7	2x2	LTE B2	20	900	1960	4x4	LTE B4	20	2175	2132.5	4x4	-	-	-	-	-	24.28	24.27
CA_2A-12A-[66C]	LTE B12	5	23035	701.5	QPSK	1	0	5035	731.5	2x2	LTE B2	20	900	1960	2x2	LTE B66	20	66786	2145	4x4	LTE B66	20	66984	2164.8	4x4	-	-	-	-	-	24.35	24.27
CA_[2A]-12A-66C	LTE B12	5	23035	701.5	QPSK	1	0	5035	731.5	2x2	LTE B2	20	900	1960	4x4	LTE B66	20	66786	2145	2x2	LTE B66	20	66984	2164.8	2x2	-	-	-	-	-	24.25	24.27
CA_[2A]-12A-[66C]	LTE B12	5	23035	701.5	QPSK	1	0	5035	731.5	2x2	LTE B2	20	900	1960	4x4	LTE B66	20	66786	2145	4x4	LTE B66	20	66984	2164.8	4x4	-	-	-	-	-	24.24	24.27
CA_[4A]-4A-12B	LTE B12	5	23035	701.5	QPSK	1	0	5035	731.5	2x2	LTE B12	10	5107	738.7	2x2	LTE B4	20	2175	2132.5	4x4	LTE B4	10	2350	2150	2x2	-	-	-	-	-	24.36	24.27
CA_[4A]-[4A]-12B	LTE B12	5	23035	701.5	QPSK	1	0	5035	731.5	2x2	LTE B12	10	5107	738.7	2x2	LTE B4	20	2175	2132.5	4x4	LTE B4	10	2350	2150	4x4	-	-	-	-	-	24.35	24.27
CA_2A-2A-12A-30A-[66A]	LTE B12	5	23035	701.5	QPSK	1	0	5035	731.5	2x2	LTE B2	20	900	1960	2x2	LTE B2	20	700	1940	2x2	LTE B30	10	9820	2355	2x2	LTE B66	20	66786	2145	4x4	24.25	24.27
CA_2A-2A-12A-[30A]-66A	LTE B12	5	23035	701.5	QPSK	1	0	5035	731.5	2x2	LTE B2	20	900	1960	2x2	LTE B2	20	700	1940	2x2	LTE B30	10	9820	2355	4x4	LTE B66	20	66786	2145	2x2	24.27	24.27
CA_2A-2A-12A-[30A]-[66A]	LTE B12	5	23035	701.5	QPSK	1	0	5035	731.5	2x2	LTE B2	20	900	1960	2x2	LTE B2	20	700	1940	2x2	LTE B30	10	9820	2355	4x4	LTE B66	20	66786	2145	4x4	24.26	24.27
CA_[2A]-2A-12A-30A-66A	LTE B12	5	23035	701.5	QPSK	1	0	5035	731.5	2x2	LTE B2	20	900	1960	4x4	LTE B2	20	700	1940	2x2	LTE B30	10	9820	2355	2x2	LTE B66	20	66786	2145	2x2	24.24	24.27
CA_[2A]-2A-12A-30A-[66A]	LTE B12	5	23035	701.5	QPSK	1	0	5035	731.5	2x2	LTE B2	20	900	1960	4x4	LTE B2	20	700	1940	2x2	LTE B30	10	9820	2355	2x2	LTE B66	20	66786	2145	4x4	24.25	24.27
CA_[2A]-2A-12A-[30A]-66A	LTE B12	5	23035	701.5	QPSK	1	0	5035	731.5	2x2	LTE B2	20	900	1960	4x4	LTE B2	20	700	1940	2x2	LTE B30	10	9820	2355	4x4	LTE B66	20	66786	2145	2x2	24.28	24.27
CA_[2A]-2A-12A-[30A]-[66A]	LTE B12	5	23035	701.5	QPSK	1	0	5035	731.5	2x2	LTE B2	20	900	1960	4x4	LTE B2	20	700	1940	2x2	LTE B30	10	9820	2355	4x4	LTE B66	20	66786	2145	4x4	24.26	24.27
CA_[2A]-[2A]-12A-30A-66A	LTE B12	5	23035	701.5	QPSK	1	0	5035	731.5	2x2	LTE B2	20	900	1960	4x4	LTE B2	20	700	1940	4x4	LTE B30	10	9820	2355	2x2	LTE B66	20	66786	2145	2x2	24.20	24.27
CA_[2A]-[2A]-12A-30A-[66A]	LTE B12	5	23035	701.5	QPSK	1	0	5035	731.5	2x2	LTE B2	20	900	1960	4x4	LTE B2	20	700	1940	4x4	LTE B30	10	9820	2355	2x2	LTE B66	20	66786	2145	4x4	24.19	24.27
CA_[2A]-[2A]-12A-[30A]-66A	LTE B12	5	23035	701.5	QPSK	1	0	5035	731.5	2x2	LTE B2	20	900	1960	4x4	LTE B2	20	700	1940	4x4	LTE B30	10	9820	2355	4x4	LTE B66	20	66786	2145	2x2	24.20	24.27
CA_[2A]-[2A]-12A-[30A]-[66A]	LTE B12	5	23035	701.5	QPSK	1	0	5035	731.5	2x2	LTE B2	20	900	1960	4x4	LTE B2	20	700	1940	4x4	LTE B30	10	9820	2355	4x4	LTE B66	20	66786	2145	4x4	24.21	24.27
CA_2A-2A-12A-[66A]-66A	LTE B12	5	23035	701.5	QPSK	1	0	5035	731.5	2x2	LTE B2	20	900	1960	2x2	LTE B2	20	700	1940	2x2	LTE B66	20	66786	2145	4x4	LTE B66	20	67236	2190	2x2	24.20	24.27
CA_2A-2A-12A-[66A]-[66A]	LTE B12	5	23035	701.5	QPSK	1	0	5035	731.5	2x2	LTE B2	20	900	1960	2x2	LTE B2	20	700	1940	2x2	LTE B66	20	66786	2145	4x4	LTE B66	20	67236	2190	4x4	24.21	24.27
CA_[2A]-2A-12A-66A-66A	LTE B12	5	23035	701.5	QPSK	1	0	5035	731.5	2x2	LTE B2	20	900	1960	4x4	LTE B2	20	700	1940	2x2	LTE B66	20	66786	2145	2x2	LTE B66	20	67236	2190	2x2	24.27	24.27
CA_[2A]-2A-12A-[66A]-66A	LTE B12	5	23035	701.5	QPSK	1	0	5035	731.5	2x2	LTE B2	20	900	1960	4x4	LTE B2	20	700	1940	2x2	LTE B66	20	66786	2145	4x4	LTE B66	20	67236	2190	2x2	24.31	24.27
CA_[2A]-2A-12A-[66A]-[66A]	LTE B12	5	23035	701.5	QPSK	1	0	5035	731.5	2x2	LTE B2	20	900	1960	4x4	LTE B2	20	700	1940	2x2	LTE B66	20	66786	2145	4x4	LTE B66	20	67236	2190	4x4	24.29	24.27
CA_[2A]-[2A]-12A-66A-66A	LTE B12	5	23035	701.5	QPSK	1	0	5035	731.5	2x2	LTE B2	20	900	1960	4x4	LTE B2	20	700	1940	4x4	LTE B66	20	66786	2145	2x2	LTE B66	20	67236	2190	2x2	24.25	24.27
CA_[2A]-[2A]-12A-[66A]-66A	LTE B12	5	23035	701.5	QPSK	1	0	5035	731.5	2x2	LTE B2	20	900	1960	4x4	LTE B2	20	700	1940	4x4	LTE B66	20	66786	2145	4x4	LTE B66	20	67236	2190	2x2	24.26	24.27
CA_[2A]-[2A]-12A-[66A]-[66A]	LTE B12	5	23035	701.5	QPSK	1	0	5035	731.5	2x2	LTE B2	20	900	1960	4x4	LTE B2	20	700	1940	4x4	LTE B66	20	66786	2145	4x4	LTE B66	20	67236	2190	4x4	24.28	24.27
CA_2A-2A-12B-[66A]	LTE B12	5	23035	701.5	QPSK	1	0	5035	731.5	2x2	LTE B12	10	5107	738.7	2x2	LTE B2	20	900	1960	2x2	LTE B2	20	700	1940	2x2	LTE B66	20	66786	2145	4x4	24.31	24.27
CA_[2A]-2A-12B-66A	LTE B12	5	23035	701.5	QPSK	1	0	5035	731.5	2x2	LTE B12	10	5107	738.7	2x2	LTE B2	20	900	1960	4x4	LTE B2	20	700	1940	2x2	LTE B66	20	66786	2145	2x2	24.35	24.27
CA_[2A]-2A-12B-[66A]	LTE B12	5	23035	701.5	QPSK	1	0	5035	731.5	2x2	LTE B12	10	5107	738.7	2x2	LTE B2	20	900	1960	4x4	LTE B2	20	700	1940	2x2	LTE B66	20	66786	2145	4x4	24.33	24.27
CA_[2A]-[2A]-12B-66A	LTE B12	5	23035	701.5	QPSK	1	0	5035	731.5	2x2	LTE B12	10	5107	738.7	2x2	LTE B2	20	900	1960	4x4	LTE B2	20	700	1940	4x4	LTE B66	20	66786	2145	2x2	24.35	24.27
CA_[2A]-[2A]-12B-[66A]	LTE B12	5	23035	701.5	QPSK	1	0	5035	731.5	2x2	LTE B12	10	5107	738.7	2x2	LTE B2	20	900	1960	4x4	LTE B2	20	700	1940	4x4	LTE B66	20	66786	2145	4x4	24.31	24.27
CA_2A-12A-30A-[66A]-66A	LTE B12	5	23035	701.5	QPSK	1	0	5035	731.5	2x2	LTE B2	20	900	1960	2x2	LTE B30	10	9820	2355	2x2	LTE B66	20	66786	2145	4x4	LTE B66	20	67236	2190	2x2	24.17	24.27
CA_2A-12A-30A-[66A]-[66A]	LTE B12	5	23035	701.5	QPSK	1	0	5035	731.5	2x2	LTE B2	20	900	1960	2x2	LTE B30	10	9820	2355	2x2	LTE B66	20	66786	2145	4x4	LTE B66	20	67236	2190	4x4	24.19	24.27
CA_2A-12A-[30A]-66A-66A	LTE B12	5	23035	701.5	QPSK	1	0	5035	731.5	2x2	LTE B2	20	900	1960	2x2	LTE B30	10	9820	2355	4x4	LTE B66	20	66786	2145	2x2	LTE B66	20	67236	2190	2x2	24.20	24.27
CA_2A-12A-[30A]-[66A]-66A	LTE B12	5	23035	701.5	QPSK	1	0	5035	731.5	2x2	LTE B2	20	900	1960	2x2	LTE B30	10	9820	2355	4x4	LTE B66	20	66786	2145	4x4	LTE B66	20	67236	2190	2x2	24.17	24.27
CA_2A-12A-[30A]-[66A]-[66A]	LTE B12	5	23035	701.5	QPSK	1	0	5035	731.5	2x2	LTE B2	20	900	1960	2x2	LTE B30	10	9820	2355	4x4	LTE B66	20	66786	2145	4x4	LTE B66	20	67236	2190	4x4	24.19	24.27
CA_[2A]-12A-30A-66A-66A	LTE B12	5	23035	701.5	QPSK	1	0	5035	731.5	2x2	LTE B2	20	900	1960	4x4	LTE B30	10	9820	2355	2x2	LTE B66	20	66786	2145	2x2	LTE B66	20	67236	2190	2x2	24.16	24.27
CA_[2A]-12A-30A-[66A]-66A	LTE B12	5	23035	701.5	QPSK	1	0	5035	731.5	2x2	LTE B2	20	900	1960	4x4	LTE B30	10	9820	2355	2x2	LTE B66	20	66786	2145	4x4	LTE B66	20	67236	2190	2x2	24.19	24.27
CA_[2A]-12A-30A-[66A]-[66A]	LTE B12	5	23035	701.5	QPSK	1	0	5035	731.5	2x2	LTE B2	20	900	1960	4x4	LTE B30	10	9820	2355	2x2	LTE B66	20	66786	2145	4x4	LTE B66	20	67236	2190	4x4	24.17	24.27
CA_[2A]-12A-[30A]-66A-66A	LTE B12	5	23035	701.5	QPSK	1	0	5035	731.5	2x2	LTE B2	20	900	1960	4x4	LTE B30	10	9820	2355	4x4	LTE B66	20	66786	2145	2x2	LTE B66	20	67236	2190	2x2	24.19	24.27
CA_[2A]-12A-[30A]-[66A]-66A	LTE B12	5	23035	701.5	QPSK	1	0	5035	731.5	2x2	LTE B2	20	900	1960	4x4	LTE B30	10	9820	2355	4x4	LTE B66	20	66786	2145	4x4	LTE B66	20	67236	2190	2x2	24.16	24.27
CA_[2A]-12A-[30A]-[66A]-[66A]	LTE B12	5	23035	701.5	QPSK	1	0	5035	731.5	2x2	LTE B2	20	900	1960	4x4	LTE B30	10	9820	2355	4x4	LTE B66	20	66786	2145	4x4	LTE B66	20	67236	2190	4x4	24.17	24.27
CA_2A-12B-[66A]-66A	LTE B12	5	23035	701.5	QPSK	1	0	5035	731.5	2x2	LTE B12	10	5107	738.7	2x2	LTE B2	20	900	1960	2x2	LTE B66	20	66786	2145	4x4	LTE B66	20	67236	2190	2x2	24.16	24.27
CA_2A-12B-[66A]-[66A]	LTE B12	5	23035	701.5	QPSK	1	0	5035	731.5	2x2	LTE B12	10	5107	738.7	2x2	LTE B2	20	900	1960	2x2	LTE B66	20	66786	2145	4x4	LTE B66	20	67236	2190	4x4	24.19	24.27
CA_[2A]-12B-66A-66A	LTE B12	5	23035	701.5	QPSK	1	0	5035	731.5	2x2	LTE B12	10	5107	738.7	2x2	LTE B2	20	900	1960	4x4	LTE B66	20	66786	2145	2x2	LTE B66	20	67236	2190	2x2	23.35	24.27
CA_[2A]-12B-[66A]-66A	LTE B12	5	23035	701.5	QPSK	1	0	5035	731.5	2x2	LTE B12	10	5107	738.7	2x2	LTE B2	20	900	1960	4x4	LTE B66	20	66786	2145	4x4	LTE B66	20	67236	2190	2x2	23.34	24.27
CA_[2A]-12B-[66A]-[66A]	LTE B12	5	23035	701.5	QPSK	1	0	5035	731.5	2x2	LTE B12	10	5107	738.7	2x2	LTE B2	20	900	1960	4x4	LTE B66	20	66786	2145	4x4	LTE B66	20	67236	2190	4x4	23.31	24.27

I.3.3 LTE Band 13 as PCC

Table I-15
Maximum Output Powers

	PCC										SCC 1					SCC 2					SCC 3					SCC 4					Power	
Combination	PCC Band	PCC BW [MHz]	PCC (UL) Ch.	PCC (UL) Freq. [MHz]	Mod.	PCC UL# RB	PCC UL RB Offset	PCC (DL) Ch.	PCC (DL) Freq. [MHz]	DL Ant. Config.	SCC Band	SCC BW [MHz]	SCC (DL) Ch.	SCC (DL) Freq. [MHz]	DL Ant. Config.	SCC Band	SCC BW [MHz]	SCC (DL) Ch.	SCC (DL) Freq. [MHz]	DL Ant. Config.	SCC Band	SCC BW [MHz]	SCC (DL) Ch.	SCC (DL) Freq. [MHz]	DL Ant. Config.	SCC Band	SCC BW [MHz]	SCC (DL) Ch.	SCC (DL) Freq. [MHz]	DL Ant. Config.	LTE Tx.Power with DL CA Enabled (dBm)	LTE Single Carrier Tx Power (dBm)
CA_2A-{4A}-13A	LTE B13	10	23230	782	QPSK	1	0	5230	751	2x2	LTE B2	20	900	1960	2x2	LTE B4	20	2175	2132.5	4x4	-	-	-	-	-	-	-	-	-	-	23.80	23.87
CA_{2A}-4A-13A	LTE B13	10	23230	782	QPSK	1	0	5230	751	2x2	LTE B2	20	900	1960	4x4	LTE B4	20	2175	2132.5	2x2	-	-	-	-	-	-	-	-	-	-	23.75	23.87
CA_{2A}-{4A}-13A	LTE B13	10	23230	782	QPSK	1	0	5230	751	2x2	LTE B2	20	900	1960	4x4	LTE B4	20	2175	2132.5	4x4	-	-	-	-	-	-	-	-	-	-	23.81	23.87
CA_{4A}-4A-13A	LTE B13	10	23230	782	QPSK	1	0	5230	751	2x2	LTE B4	20	2175	2132.5	4x4	LTE B4	10	2350	2150	2x2	-	-	-	-	-	-	-	-	-	-	23.73	23.87
CA_{4A}-{4A}-13A	LTE B13	10	23230	782	QPSK	1	0	5230	751	2x2	LTE B4	20	2175	2132.5	4x4	LTE B4	10	2350	2150	4x4	-	-	-	-	-	-	-	-	-	-	23.75	23.87
CA_13A-{48B}	LTE B13	10	23230	782	QPSK	1	0	5230	751	2x2	LTE B48	10	55990	3625	4x4	LTE B48	10	56089	3634.9	4x4	-	-	-	-	-	-	-	-	-	-	23.86	23.87
CA_2A-13A-48A-{66A}	LTE B13	10	23230	782	QPSK	1	0	5230	751	2x2	LTE B2	20	900	1960	2x2	LTE B48	20	55990	3625	2x2	LTE B66	20	66786	2145	4x4	-	-	-	-	-	23.77	23.87
CA_2A-13A-{48A}-66A	LTE B13	10	23230	782	QPSK	1	0	5230	751	2x2	LTE B2	20	900	1960	2x2	LTE B48	20	55990	3625	4x4	LTE B66	20	66786	2145	2x2	-	-	-	-	-	23.78	23.87
CA_2A-13A-{48A}-{66A}	LTE B13	10	23230	782	QPSK	1	0	5230	751	2x2	LTE B2	20	900	1960	2x2	LTE B48	20	55990	3625	4x4	LTE B66	20	66786	2145	4x4	-	-	-	-	-	23.80	23.87
CA_{2A}-13A-48A-66A	LTE B13	10	23230	782	QPSK	1	0	5230	751	2x2	LTE B2	20	900	1960	4x4	LTE B48	20	55990	3625	2x2	LTE B66	20	66786	2145	2x2	-	-	-	-	-	23.76	23.87
CA_{2A}-13A-48A-{66A}	LTE B13	10	23230	782	QPSK	1	0	5230	751	2x2	LTE B2	20	900	1960	4x4	LTE B48	20	55990	3625	4x4	LTE B66	20	66786	2145	4x4	-	-	-	-	-	23.78	23.87
CA_{2A}-{4A}-13A-48A-66A	LTE B13	10	23230	782	QPSK	1	0	5230	751	2x2	LTE B2	20	900	1960	4x4	LTE B48	20	55990	3625	4x4	LTE B66	20	66786	2145	2x2	-	-	-	-	-	23.77	23.87
CA_{2A}-13A-{48A}-{66A}	LTE B13	10	23230	782	QPSK	1	0	5230	751	2x2	LTE B2	20	900	1960	4x4	LTE B48	20	55990	3625	4x4	LTE B66	20	66786	2145	4x4	-	-	-	-	-	23.85	23.87
CA_2A-13A-{66B}	LTE B13	10	23230	782	QPSK	1	0	5230	751	2x2	LTE B2	20	900	1960	2x2	LTE B66	15	66786	2145	4x4	LTE B66	5	66879	2154.3	4x4	-	-	-	-	-	23.79	23.87
CA_{2A}-13A-66B	LTE B13	10	23230	782	QPSK	1	0	5230	751	2x2	LTE B2	20	900	1960	4x4	LTE B66	15	66786	2145	2x2	LTE B66	5	66879	2154.3	2x2	-	-	-	-	-	23.76	23.87
CA_{2A}-13A-{66B}	LTE B13	10	23230	782	QPSK	1	0	5230	751	2x2	LTE B2	20	900	1960	4x4	LTE B66	15	66786	2145	4x4	LTE B66	5	66879	2154.3	4x4	-	-	-	-	-	23.77	23.87
CA_2A-13A-{66C}	LTE B13	10	23230	782	QPSK	1	0	5230	751	2x2	LTE B2	20	900	1960	2x2	LTE B66	20	66786	2145	4x4	LTE B66	20	66984	2164.8	4x4	-	-	-	-	-	23.75	23.87
CA_{2A}-13A-66C	LTE B13	10	23230	782	QPSK	1	0	5230	751	2x2	LTE B2	20	900	1960	4x4	LTE B66	20	66786	2145	2x2	LTE B66	20	66984	2164.8	2x2	-	-	-	-	-	23.77	23.87
CA_{2A}-13A-{66C}	LTE B13	10	23230	782	QPSK	1	0	5230	751	2x2	LTE B2	20	900	1960	4x4	LTE B66	20	66786	2145	4x4	LTE B66	20	66984	2164.8	4x4	-	-	-	-	-	23.76	23.87
CA_13A-48A-66B	LTE B13	10	23230	782	QPSK	1	0	5230	751	2x2	LTE B48	20	55990	3625	2x2	LTE B66	15	66786	2145	2x2	LTE B66	5	66879	2154.3	2x2	-	-	-	-	-	23.75	23.87
CA_13A-{48A}-66B	LTE B13	10	23230	782	QPSK	1	0	5230	751	2x2	LTE B48	20	55990	3625	4x4	LTE B66	15	66786	2145	4x4	LTE B66	5	66879	2154.3	4x4	-	-	-	-	-	23.83	23.87
CA_13A-48A-{66C}	LTE B13	10	23230	782	QPSK	1	0	5230	751	2x2	LTE B48	20	55990	3625	2x2	LTE B66	20	66786	2145	4x4	LTE B66	20	66984	2164.8	4x4	-	-	-	-	-	23.82	23.87
CA_13A-{48A}-66C	LTE B13	10	23230	782	QPSK	1	0	5230	751	2x2	LTE B48	20	55990	3625	4x4	LTE B66	20	66786	2145	2x2	LTE B66	20	66984	2164.8	2x2	-	-	-	-	-	23.77	23.87
CA_13A-{48A}-{66C}	LTE B13	10	23230	782	QPSK	1	0	5230	751	2x2	LTE B48	20	55990	3625	4x4	LTE B66	20	66786	2145	4x4	LTE B66	20	66984	2164.8	4x4	-	-	-	-	-	23.76	23.87
CA_2A-2A-13A-{66A}-66A	LTE B13	10	23230	782	QPSK	1	0	5230	751	2x2	LTE B2	20	900	1960	2x2	LTE B2	20	700	1940	2x2	LTE B66	20	66786	2145	4x4	LTE B66	20	67236	2190	2x2	23.72	23.87
CA_2A-2A-13A-{66A}-{66A}	LTE B13	10	23230	782	QPSK	1	0	5230	751	2x2	LTE B2	20	900	1960	2x2	LTE B2	20	700	1940	2x2	LTE B66	20	66786	2145	4x4	LTE B66	20	67236	2190	4x4	23.76	23.87
CA_{2A}-2A-13A-66A-66A	LTE B13	10	23230	782	QPSK	1	0	5230	751	2x2	LTE B2	20	900	1960	4x4	LTE B2	20	700	1940	2x2	LTE B66	20	66786	2145	2x2	LTE B66	20	67236	2190	2x2	23.78	23.87
CA_{2A}-2A-13A-{66A}-66A	LTE B13	10	23230	782	QPSK	1	0	5230	751	2x2	LTE B2	20	900	1960	4x4	LTE B2	20	700	1940	2x2	LTE B66	20	66786	2145	4x4	LTE B66	20	67236	2190	2x2	23.80	23.87
CA_{2A}-2A-13A-{66A}-{66A}	LTE B13	10	23230	782	QPSK	1	0	5230	751	2x2	LTE B2	20	900	1960	4x4	LTE B2	20	700	1940	2x2	LTE B66	20	66786	2145	4x4	LTE B66	20	67236	2190	4x4	23.74	23.87
CA_{2A}-{2A}-13A-66A-66A	LTE B13	10	23230	782	QPSK	1	0	5230	751	2x2	LTE B2	20	900	1960	4x4	LTE B2	20	700	1940	4x4	LTE B66	20	66786	2145	2x2	LTE B66	20	67236	2190	2x2	23.84	23.87
CA_{2A}-{2A}-13A-{66A}-66A	LTE B13	10	23230	782	QPSK	1	0	5230	751	2x2	LTE B2	20	900	1960	4x4	LTE B2	20	700	1940	4x4	LTE B66	20	66786	2145	4x4	LTE B66	20	67236	2190	2x2	23.85	23.87
CA_{2A}-{2A}-13A-{66A}-{66A}	LTE B13	10	23230	782	QPSK	1	0	5230	751	2x2	LTE B2	20	900	1960	4x4	LTE B2	20	700	1940	4x4	LTE B66	20	66786	2145	4x4	LTE B66	20	67236	2190	4x4	23.76	23.87
CA_2A-13A-48C-{66A}	LTE B13	10	23230	782	QPSK	1	0	5230	751	2x2	LTE B2	20	900	1960	2x2	LTE B48	20	55990	3625	2x2	LTE B48	20	56188	3644.8	2x2	LTE B66	20	66786	2145	4x4	23.76	23.87
CA_2A-13A-{48C}-66A	LTE B13	10	23230	782	QPSK	1	0	5230	751	2x2	LTE B2	20	900	1960	2x2	LTE B48	20	55990	3625	4x4	LTE B48	20	56188	3644.8	4x4	LTE B66	20	66786	2145	2x2	23.76	23.87
CA_2A-13A-{48C}-{66A}	LTE B13	10	23230	782	QPSK	1	0	5230	751	2x2	LTE B2	20	900	1960	2x2	LTE B48	20	55990	3625	4x4	LTE B48	20	56188	3644.8	4x4	LTE B66	20	66786	2145	4x4	23.77	23.87
CA_{2A}-13A-48C-66A	LTE B13	10	23230	782	QPSK	1	0	5230	751	2x2	LTE B2	20	900	1960	4x4	LTE B48	20	55990	3625	2x2	LTE B48	20	56188	3644.8	2x2	LTE B66	20	66786	2145	2x2	23.78	23.87
CA_{2A}-13A-48C-{66A}	LTE B13	10	23230	782	QPSK	1	0	5230	751	2x2	LTE B2	20	900	1960	4x4	LTE B48	20	55990	3625	2x2	LTE B48	20	56188	3644.8	2x2	LTE B66	20	66786	2145	4x4	23.79	23.87
CA_{2A}-13A-{48C}-66A	LTE B13	10	23230	782	QPSK	1	0	5230	751	2x2	LTE B2	20	900	1960	4x4	LTE B48	20	55990	3625	4x4	LTE B48	20	56188	3644.8	4x4	LTE B66	20	66786	2145	2x2	23.75	23.87
CA_{2A}-13A-{48C}-{66A}	LTE B13	10	23230	782	QPSK	1	0	5230	751	2x2	LTE B2	20	900	1960	4x4	LTE B48	20	55990	3625	4x4	LTE B48	20	56188	3644.8	4x4	LTE B66	20	66786	2145	4x4	23.77	23.87
CA_2A-13A-{48D}	LTE B13	10	23230	782	QPSK	1	0	5230	751	2x2	LTE B2	20	900	1960	2x2	LTE B48	20	55990	3625	4x4	LTE B48	20	56188	3644.8	4x4	LTE B48	20	56386	3664.6	4x4	23.79	23.87
CA_{2A}-13A-48D	LTE B13	10	23230	782	QPSK	1	0	5230	751	2x2	LTE B2	20	900	1960	4x4	LTE B48	20	55990	3625	2x2	LTE B48	20	56188	3644.8	2x2	LTE B48	20	56386	3664.6	2x2	23.77	23.87
CA_{2A}-13A-{48D}	LTE B13	10	23230	782	QPSK	1	0	5230	751	2x2	LTE B2	20	900	1960	4x4	LTE B48	20	55990	3625	4x4	LTE B48	20	56188	3644.8	4x4	LTE B48	20	56386	3664.6	4x4	23.75	23.87
CA_13A-48D-{66A}	LTE B13	10	23230	782	QPSK	1	0	5230	751	2x2	LTE B48	20	55990	3625	2x2	LTE B48	20	56188	3644.8	2x2	LTE B48	20	56386	3664.6	2x2	LTE B66	20	66786	2145	4x4	23.76	23.87
CA_13A-{48D}-66A	LTE B13	10	23230	782	QPSK	1	0	5230	751	2x2	LTE B48	20	55990	3625	4x4	LTE B48	20	56188	3644.8	4x4	LTE B48	20	56386	3664.6	4x4	LTE B66	20	66786	2145	2x2	23.77	23.87
CA_13A-{48D}-{66A}	LTE B13	10	23230	782	QPSK	1	0	5230	751	2x2	LTE B48	20	55990	3625	4x4	LTE B48	20	56188	3644.8	4x4	LTE B48	20	56386	3664.6	4x4	LTE B66	20	66786	2145	4x4	23.78	23.87
CA_13A-{48E}	LTE B13	10	23230	782	QPSK	1	0	5230	751	2x2	LTE B48	20	55990	3625	4x4	LTE B48	20	56188	3644.8	4x4	LTE B48	20	56386	3664.6	4x4	LTE B48	20	56584	3684.4	4x4	23.82	23.87

I.3.4 LTE Band 14 as PCC

Table I-16
Maximum Output Powers

	PCC										SCC 1					SCC 2					SCC 3					SCC 4					Power	
Combination	PCC Band	PCC BW [MHz]	PCC (UL) Ch.	PCC (UL) Freq. [MHz]	Mod.	PCC UL# RB	PCC UL RB Offset	PCC (DL) Ch.	PCC (DL) Freq. [MHz]	DL Ant. Config.	SCC Band	SCC BW [MHz]	SCC (DL) Ch.	SCC (DL) Freq. [MHz]	DL Ant. Config.	SCC Band	SCC BW [MHz]	SCC (DL) Ch.	SCC (DL) Freq. [MHz]	DL Ant. Config.	SCC Band	SCC BW [MHz]	SCC (DL) Ch.	SCC (DL) Freq. [MHz]	DL Ant. Config.	SCC Band	SCC BW [MHz]	SCC (DL) Ch.	SCC (DL) Freq. [MHz]	DL Ant. Config.	LTE Tx.Power with DL CA Enabled (dBm)	LTE Single Carrier Tx Power (dBm)
CA_2A-2A-14A-30A-{66A}	LTE B14	10	23330	793	QPSK	1	25	5330	763	2x2	LTE B2	20	900	1960	2x2	LTE B2	20	700	1940	2x2	LTE B30	10	9820	2355	2x2	66786	2145	4x4	23.79	23.77
CA_2A-2A-14A-{30A}-66A	LTE B14	10	23330	793	QPSK	1	25	5330	763	2x2	LTE B2	20	900	1960	2x2	LTE B2	20	700	1940	2x2	LTE B30	10	9820	2355	4x4	LTE B66	20	66786	2145	2x2	23.85	23.77
CA_2A-2A-14A-{30A}-{66A}	LTE B14	10	23330	793	QPSK	1	25	5330	763	2x2	LTE B2	20	900	1960	2x2	LTE B2	20	700	1940	2x2	LTE B30	10	9820	2355	4x4	LTE B66	20	66786	2145	4x4	23.81	23.77
CA_{2A}-2A-14A-30A-{66A}	LTE B14	10	23330	793	QPSK	1	25	5330	763	2x2	LTE B2	20	900	1960	4x4	LTE B2	20	700	1940	2x2	LTE B30	10	9820	2355	2x2	LTE B66	20	66786	2145	4x4	23.78	23.77
CA_{2A}-2A-14A-{30A}-66A	LTE B14	10	23330	793	QPSK	1	25	5330	763	2x2	LTE B2	20	900	1960	4x4	LTE B2	20	700	1940	2x2	LTE B30	10	9820	2355	4x4	LTE B66	20	66786	2145	4x4	23.82	23.77
CA_{2A}-2A-14A-{30A}-{66A}	LTE B14	10	23330	793	QPSK	1	25	5330	763	2x2	LTE B2	20	900	1960	4x4	LTE B2	20	700	1940	2x2	LTE B30	10	9820	2355	4x4	LTE B66	20	66786	2145	4x4	23.85	23.77
CA_{2A}-{2A}-14A-30A-66A	LTE B14	10	23330	793	QPSK	1	25	5330	763	2x2	LTE B2	20	900	1960	4x4	LTE B2	20	700	1940	4x4	LTE B30	10	9820	2355	2x2	LTE B66	20	66786	2145	2x2	23.80	23.77
CA_{2A}-{2A}-14A-30A-{66A}	LTE B14	10	23330	793	QPSK	1	25	5330	763	2x2	LTE B2	20	900	1960	4x4	LTE B2	20	700	1940	4x4	LTE B30	10	9820	2355	4x4	LTE B66	20	66786	2145	4x4	23.82	23.77
CA_{2A}-{2A}-14A-{30A}-66A	LTE B14	10	23330	793	QPSK	1	25	5330	763	2x2	LTE B2	20	900	1960	4x4	LTE B2	20	700	1940	4x4	LTE B30	10	9820	2355	4x4	LTE B66	20	66786	2145	2x2	23.80	23.77
CA_{2A}-{2A}-14A-{30A}-{66A}	LTE B14	10	23330	793	QPSK	1	25	5330	763	2x2	LTE B2	20	900	1960	4x4	LTE B2	20	700	1940	4x4	LTE B30	10	9820	2355	4x4	LTE B66	20	66786	2145	4x4	23.66	23.77
CA_2A-2A-14A-{66A}-66A	LTE B14	10	23330	793	QPSK	1	25	5330	763	2x2	LTE B2	20	900	1960	2x2	LTE B2	20	700	1940	2x2	LTE B66	20	66786	2145	4x4	LTE B66	20	67236	2190	2x2	23.63	23.77
CA_2A-2A-14A-{66A}-{66A}	LTE B14	10	23330	793	QPSK	1	25	5330	763	2x2	LTE B2	20	900	1960	2x2	LTE B2	20	700	1940	2x2	LTE B66	20	66786	2145	4x4	LTE B66	20	67236	2190	4x4	23.63	23.77
CA_{2A}-{2A}-14A-66A-66A	LTE B14	10	23330	793	QPSK	1	25	5330	763	2x2	LTE B2	20	900	1960	4x4	LTE B2	20	700	1940	2x2	LTE B66	20	66786	2145	2x2	LTE B66	20	67236	2190	2x2	23.64	23.77
CA_{2A}-{2A}-14A-{66A}-66A	LTE B14	10	23330	793	QPSK	1	25	5330	763	2x2	LTE B2	20	900	1960	4x4	LTE B2	20	700	1940	2x2	LTE B66	20	66786	2145	4x4	LTE B66	20	67236	2190	2x2	23.66	23.77
CA_{2A}-{2A}-14A-{66A}-{66A}	LTE B14	10	23330	793	QPSK	1	25	5330	763	2x2	LTE B2	20	900	1960	4x4	LTE B2	20	700	1940	2x2	LTE B66	20	66786	2145	4x4	LTE B66	20	67236	2190	4x4	23.62	23.77
CA_{2A}-{2A}-14A-66A-66A	LTE B14	10	23330	793	QPSK	1	25	5330	763	2x2	LTE B2	20	900	1960	4x4	LTE B2	20	700	1940	4x4	LTE B66	20	66786	2145	2x2	LTE B66	20	67236	2190	2x2	23.65	23.77
CA_{2A}-{2A}-14A-{66A}-66A	LTE B14	10	23330	793	QPSK	1	25	5330	763	2x2	LTE B2	20	900	1960	4x4	LTE B2	20	700	1940	4x4	LTE B66	20	66786	2145	4x4	LTE B66	20	67236	2190	2x2	23.66	23.77
CA_{2A}-{2A}-14A-{66A}-{66A}	LTE B14	10	23330	793	QPSK	1	25	5330	763	2x2	LTE B2	20	900	1960	4x4	LTE B2	20	700	1940	4x4	LTE B66	20	66786	2145	4x4	LTE B66	20	67236	2190	4x4	23.65	23.77
CA_2A-14A-30A-{66A}-66A	LTE B14	10	23330	793	QPSK	1	25	5330	763	2x2	LTE B2	20	900	1960	2x2	LTE B30	10	9820	2355	2x2	LTE B66	20	66786	2145	2x2	LTE B66	20	67236	2190	2x2	23.76	23.77
CA_2A-14A-30A-{66A}-{66A}	LTE B14	10	23330	793	QPSK	1	25	5330	763	2x2	LTE B2	20	900	1960	2x2	LTE B30	10	9820	2355	2x2	LTE B66	20	66786	2145	4x4	LTE B66	20	67236	2190	4x4	23.77	23.77
CA_{2A}-14A-30A-66A-66A	LTE B14	10	23330	793	QPSK	1	25	5330	763	2x2	LTE B2	20	900	1960	2x2	LTE B30	10	9820	2355	4x4	LTE B66	20	66786	2145	2x2	LTE B66	20	67236	2190	2x2	23.75	23.77
CA_{2A}-14A-30A-{66A}-66A	LTE B14	10	23330	793	QPSK	1	25	5330	763	2x2	LTE B2	20	900	1960	2x2	LTE B30	10	9820	2355	4x4	LTE B66	20	66786	2145	4x4	LTE B66	20	67236	2190	2x2	23.79	23.77
CA_{2A}-14A-30A-{66A}-{66A}	LTE B14	10	23330	793	QPSK	1	25	5330	763	2x2	LTE B2	20	900	1960	2x2	LTE B30	10	9820	2355	4x4	LTE B66	20	66786	2145	4x4	LTE B66	20	67236	2190	4x4	23.80	23.77
CA_{2A}-14A-30A-66A-66A	LTE B14	10	23330	793	QPSK	1	25	5330	763	2x2	LTE B2	20	900	1960	4x4	LTE B30	10	9820	2355	2x2	LTE B66	20	66786	2145	2x2	LTE B66	20	67236	2190	2x2	23.81	23.77
CA_{2A}-14A-30A-{66A}-66A	LTE B14	10	23330	793	QPSK	1	25	5330	763	2x2	LTE B2	20	900	1960	2x2	LTE B30	10	9820	2355	4x4	LTE B66	20	66786	2145	4x4	LTE B66	20	67236	2190	4x4	23.82	23.77
CA_{2A}-14A-30A-{66A}-{66A}	LTE B14	10	23330	793	QPSK	1	25	5330	763	2x2	LTE B2	20	900	1960	2x2	LTE B30	10	9820	2355	2x2	LTE B66	20	66786	2145	4x4	LTE B66	20	67236	2190	4x4	23.78	23.77
CA_2A-14A-{30A}-66A-66A	LTE B14	10	23330	793	QPSK	1	25	5330	763	2x2	LTE B2	20	900	1960	4x4	LTE B30	10	9820	2355	4x4	LTE B66	20	66786	2145	2x2	LTE B66	20	67236	2190	2x2	23.79	23.77
CA_2A-14A-{30A}-66A-{66A}	LTE B14	10	23330	793	QPSK	1	25	5330	763	4x4	LTE B2	20	900	1960	2x2	LTE B30	10	9820	2355	4x4	LTE B66	20	66786	2145	4x4	LTE B66	20	67236	2190	2x2	23.74	23.77
CA_2A-14A-{30A}-{66A}-66A	LTE B14	10	23330	793	QPSK	1	25	5330	763	2x2	LTE B2	20	900	1960	4x4	LTE B30	10	9820	2355	4x4	LTE B66	20	66786	2145	4x4	LTE B66	20	67236	2190	4x4	23.81	23.77

I.3.5 LTE Band 66 as PCC

Table I-17
Maximum Output Powers

	PCC										SCC 1					SCC 2					SCC 3					SCC 4					Power	
Combination	PCC Band	PCC BW [MHz]	PCC (UL) Ch.	PCC (UL) Freq. [MHz]	Mod.	PCC UL# RB	PCC UL RB Offset	PCC (DL) Ch.	PCC (DL) Freq. [MHz]	DL Ant. Config.	SCC Band	SCC BW [MHz]	SCC (DL) Ch.	SCC (DL) Freq. [MHz]	DL Ant. Config.	SCC Band	SCC BW [MHz]	SCC (DL) Ch.	SCC (DL) Freq. [MHz]	DL Ant. Config.	SCC Band	SCC BW [MHz]	SCC (DL) Ch.	SCC (DL) Freq. [MHz]	DL Ant. Config.	SCC Band	SCC BW [MHz]	SCC (DL) Ch.	SCC (DL) Freq. [MHz]	DL Ant. Config.	LTE Tx.Power with DL CA Enabled (dBm)	LTE Single Carrier Tx Power (dBm)
CA_12A-[66A] (1)	LTE B66	5	131997	1712.5	QPSK	1	12	66461	2112.5	4x4	LTE B12	10	5095	737.5	2x2	-	-	-	-	-	-	-	-	-	-	-	-	-	-	-	23.74	23.66
CA_12A-[66A] (2)	LTE B66	5	131997	1712.5	QPSK	1	12	66461	2112.5	4x4	LTE B12	10	5095	737.5	2x2	-	-	-	-	-	-	-	-	-	-	-	-	-	-	-	23.74	23.66
CA_48B-[66A]	LTE B66	5	132322	1745	QPSK	1	12	66786	2145	4x4	LTE B48	10	55990	3625	4x4	LTE B48	10	56089	3634.9	2x2	-	-	-	-	-	-	-	-	-	-	23.74	23.66
CA_[48B]-66A	LTE B66	5	132322	1745	QPSK	1	12	66786	2145	2x2	LTE B48	10	55990	3625	4x4	LTE B48	10	56089	3634.9	4x4	-	-	-	-	-	-	-	-	-	-	23.74	23.66
CA_[48B]-[66A]	LTE B66	5	132322	1745	QPSK	1	12	66786	2145	4x4	LTE B48	10	55990	3625	4x4	LTE B48	10	56089	3634.9	4x4	-	-	-	-	-	-	-	-	-	-	23.82	23.66
CA_2A-2A-[66A]-71A	LTE B66	5	131997	1712.5	QPSK	1	12	66461	2112.5	4x4	LTE B2	20	900	1960	2x2	LTE B2	20	700	1940	2x2	LTE B71	20	68761	634.5	2x2	-	-	-	-	-	23.67	23.66
CA_[2A]-2A-66A-71A	LTE B66	5	131997	1712.5	QPSK	1	12	66461	2112.5	2x2	LTE B2	20	900	1960	4x4	LTE B2	20	700	1940	2x2	LTE B71	20	68761	634.5	2x2	-	-	-	-	-	23.63	23.66
CA_[2A]-2A-[66A]-71A	LTE B66	5	131997	1712.5	QPSK	1	12	66461	2112.5	4x4	LTE B2	20	900	1960	4x4	LTE B2	20	700	1940	2x2	LTE B71	20	68761	634.5	2x2	-	-	-	-	-	23.70	23.66
CA_[2A]-[2A]-66A-71A	LTE B66	5	131997	1712.5	QPSK	1	12	66461	2112.5	2x2	LTE B2	20	900	1960	4x4	LTE B2	20	700	1940	4x4	LTE B71	20	68761	634.5	2x2	-	-	-	-	-	23.72	23.66
CA_[2A]-[2A]-[66A]-71A	LTE B66	5	131997	1712.5	QPSK	1	12	66461	2112.5	4x4	LTE B2	20	900	1960	4x4	LTE B2	20	700	1940	4x4	LTE B71	20	68761	634.5	2x2	-	-	-	-	-	23.71	23.66
CA_2A-5A-48A-[66A]	LTE B66	5	131997	1712.5	QPSK	1	12	66461	2112.5	4x4	LTE B2	20	900	1960	2x2	LTE B5	10	2525	881.5	2x2	LTE B48	20	55990	3625	2x2	-	-	-	-	-	23.74	23.66
CA_2A-5A-[48A]-66A	LTE B66	5	131997	1712.5	QPSK	1	12	66461	2112.5	2x2	LTE B2	20	900	1960	2x2	LTE B5	10	2525	881.5	2x2	LTE B48	20	55990	3625	4x4	-	-	-	-	-	23.76	23.66
CA_2A-5A-[48A]-[66A]	LTE B66	5	131997	1712.5	QPSK	1	12	66461	2112.5	4x4	LTE B2	20	900	1960	2x2	LTE B5	10	2525	881.5	2x2	LTE B48	20	55990	3625	4x4	-	-	-	-	-	23.79	23.66
CA_[2A]-5A-48A-66A	LTE B66	5	131997	1712.5	QPSK	1	12	66461	2112.5	2x2	LTE B2	20	900	1960	4x4	LTE B5	10	2525	881.5	2x2	LTE B48	20	55990	3625	2x2	-	-	-	-	-	23.74	23.66
CA_[2A]-5A-48A-[66A]	LTE B66	5	131997	1712.5	QPSK	1	12	66461	2112.5	4x4	LTE B2	20	900	1960	4x4	LTE B5	10	2525	881.5	2x2	LTE B48	20	55990	3625	2x2	-	-	-	-	-	23.78	23.66
CA_[2A]-5A-[48A]-66A	LTE B66	5	131997	1712.5	QPSK	1	12	66461	2112.5	2x2	LTE B2	20	900	1960	4x4	LTE B5	10	2525	881.5	2x2	LTE B48	20	55990	3625	4x4	-	-	-	-	-	23.75	23.66
CA_[2A]-5A-[48A]-[66A]	LTE B66	5	131997	1712.5	QPSK	1	12	66461	2112.5	4x4	LTE B2	20	900	1960	4x4	LTE B5	10	2525	881.5	2x2	LTE B48	20	55990	3625	4x4	-	-	-	-	-	23.79	23.66
CA_2A-12A-[66C]	LTE B66	5	131997	1712.5	QPSK	1	12	66461	2112.5	4x4	LTE B66	20	66578	2124.2	4x4	LTE B2	20	900	1960	2x2	LTE B12	10	5095	737.5	2x2	-	-	-	-	-	23.74	23.66
CA_[2A]-12A-66C	LTE B66	5	131997	1712.5	QPSK	1	12	66461	2112.5	2x2	LTE B66	20	66578	2124.2	2x2	LTE B2	20	900	1960	4x4	LTE B12	10	5095	737.5	2x2	-	-	-	-	-	23.76	23.66
CA_[2A]-12A-[66C]	LTE B66	5	131997	1712.5	QPSK	1	12	66461	2112.5	4x4	LTE B66	20	66578	2124.2	4x4	LTE B2	20	900	1960	4x4	LTE B12	10	5095	737.5	2x2	-	-	-	-	-	23.74	23.66
CA_2A-13A-48A-[66A]	LTE B66	5	131997	1712.5	QPSK	1	12	66461	2112.5	4x4	LTE B2	20	900	1960	2x2	LTE B13	10	5230	751	2x2	LTE B48	20	55990	3625	2x2	-	-	-	-	-	23.74	23.66
CA_2A-13A-[48A]-66A	LTE B66	5	131997	1712.5	QPSK	1	12	66461	2112.5	2x2	LTE B2	20	900	1960	2x2	LTE B13	10	5230	751	2x2	LTE B48	20	55990	3625	4x4	-	-	-	-	-	23.72	23.66
CA_2A-13A-[48A]-[66A]	LTE B66	5	131997	1712.5	QPSK	1	12	66461	2112.5	4x4	LTE B2	20	900	1960	2x2	LTE B13	10	5230	751	2x2	LTE B48	20	55990	3625	4x4	-	-	-	-	-	23.76	23.66
CA_[2A]-13A-48A-66A	LTE B66	5	131997	1712.5	QPSK	1	12	66461	2112.5	2x2	LTE B2	20	900	1960	4x4	LTE B13	10	5230	751	2x2	LTE B48	20	55990	3625	2x2	-	-	-	-	-	23.73	23.66
CA_[2A]-13A-48A-[66A]	LTE B66	5	131997	1712.5	QPSK	1	12	66461	2112.5	4x4	LTE B2	20	900	1960	4x4	LTE B13	10	5230	751	2x2	LTE B48	20	55990	3625	2x2	-	-	-	-	-	23.77	23.66
CA_[2A]-13A-[48A]-66A	LTE B66	5	131997	1712.5	QPSK	1	12	66461	2112.5	2x2	LTE B2	20	900	1960	4x4	LTE B13	10	5230	751	2x2	LTE B48	20	55990	3625	4x4	-	-	-	-	-	23.77	23.66
CA_[2A]-13A-[48A]-[66A]	LTE B66	5	131997	1712.5	QPSK	1	12	66461	2112.5	4x4	LTE B2	20	900	1960	4x4	LTE B13	10	5230	751	2x2	LTE B48	20	55990	3625	4x4	-	-	-	-	-	23.75	23.66
CA_2A-13A-[66B]	LTE B66	5	131997	1712.5	QPSK	1	12	66461	2112.5	4x4	LTE B66	15	66554	2121.8	4x4	LTE B2	20	900	1960	2x2	LTE B13	10	5230	751	2x2	-	-	-	-	-	23.70	23.66
CA_[2A]-13A-66B	LTE B66	5	131997	1712.5	QPSK	1	12	66461	2112.5	2x2	LTE B66	15	66554	2121.8	2x2	LTE B2	20	900	1960	4x4	LTE B13	10	5230	751	2x2	-	-	-	-	-	23.76	23.66
CA_[2A]-13A-[66B]	LTE B66	5	131997	1712.5	QPSK	1	12	66461	2112.5	4x4	LTE B66	15	66554	2121.8	4x4	LTE B2	20	900	1960	4x4	LTE B13	10	5230	751	2x2	-	-	-	-	-	23.69	23.66
CA_2A-13A-[66C]	LTE B66	5	131997	1712.5	QPSK	1	12	66461	2112.5	4x4	LTE B66	20	66578	2124.2	4x4	LTE B2	20	900	1960	2x2	LTE B13	10	5230	751	2x2	-	-	-	-	-	23.70	23.66
CA_[2A]-13A-66C	LTE B66	5	131997	1712.5	QPSK	1	12	66461	2112.5	2x2	LTE B66	20	66578	2124.2	2x2	LTE B2	20	900	1960	4x4	LTE B13	10	5230	751	2x2	-	-	-	-	-	23.73	23.66
CA_[2A]-13A-[66C]	LTE B66	5	131997	1712.5	QPSK	1	12	66461	2112.5	4x4	LTE B66	20	66578	2124.2	4x4	LTE B2	20	900	1960	4x4	LTE B13	10	5230	751	2x2	-	-	-	-	-	23.72	23.66
CA_2A-48A-48A-[66A]	LTE B66	5	131997	1712.5	QPSK	1	12	66461	2112.5	4x4	LTE B2	20	900	1960	2x2	LTE B48	20	55990	3625	2x2	LTE B48	20	55340	3560	2x2	-	-	-	-	-	23.70	23.66
CA_2A-[48A]-48A-66A	LTE B66	5	131997	1712.5	QPSK	1	12	66461	2112.5	2x2	LTE B2	20	900	1960	2x2	LTE B48	20	55990	3625	4x4	LTE B48	20	55340	3560	2x2	-	-	-	-	-	23.71	23.66
CA_2A-[48A]-48A-[66A]	LTE B66	5	131997	1712.5	QPSK	1	12	66461	2112.5	4x4	LTE B2	20	900	1960	2x2	LTE B48	20	55990	3625	4x4	LTE B48	20	55340	3560	2x2	-	-	-	-	-	23.73	23.66
CA_2A-[48A]-[48A]-66A	LTE B66	5	131997	1712.5	QPSK	1	12	66461	2112.5	2x2	LTE B2	20	900	1960	2x2	LTE B48	20	55990	3625	4x4	LTE B48	20	55340	3560	4x4	-	-	-	-	-	23.70	23.66
CA_2A-[48A]-[48A]-[66A]	LTE B66	5	131997	1712.5	QPSK	1	12	66461	2112.5	4x4	LTE B2	20	900	1960	2x2	LTE B48	20	55990	3625	4x4	LTE B48	20	55340	3560	4x4	-	-	-	-	-	23.71	23.66
CA_[2A]-48A-48A-66A	LTE B66	5	131997	1712.5	QPSK	1	12	66461	2112.5	2x2	LTE B2	20	900	1960	4x4	LTE B48	20	55990	3625	2x2	LTE B48	20	55340	3560	2x2	-	-	-	-	-	23.76	23.66
CA_[2A]-48A-48A-[66A]	LTE B66	5	131997	1712.5	QPSK	1	12	66461	2112.5	4x4	LTE B2	20	900	1960	4x4	LTE B48	20	55990	3625	2x2	LTE B48	20	55340	3560	2x2	-	-	-	-	-	23.69	23.66
CA_[2A]-[48A]-48A-66A	LTE B66	5	131997	1712.5	QPSK	1	12	66461	2112.5	2x2	LTE B2	20	900	1960	4x4	LTE B48	20	55990	3625	4x4	LTE B48	20	55340	3560	2x2	-	-	-	-	-	23.74	23.66
CA_[2A]-[48A]-48A-[66A]	LTE B66	5	131997	1712.5	QPSK	1	12	66461	2112.5	4x4	LTE B2	20	900	1960	4x4	LTE B48	20	55990	3625	4x4	LTE B48	20	55340	3560	2x2	-	-	-	-	-	23.72	23.66
CA_[2A]-[48A]-[48A]-66A	LTE B66	5	131997	1712.5	QPSK	1	12	66461	2112.5	2x2	LTE B2	20	900	1960	4x4	LTE B48	20	55990	3625	4x4	LTE B48	20	55340	3560	4x4	-	-	-	-	-	23.78	23.66
CA_[2A]-[48A]-[48A]-[66A]	LTE B66	5	131997	1712.5	QPSK	1	12	66461	2112.5	4x4	LTE B2	20	900	1960	4x4	LTE B48	20	55990	3625	4x4	LTE B48	20	55340	3560	4x4	-	-	-	-	-	23.65	23.66
CA_2A-66A-[66A]-71A	LTE B66	5	131997	1712.5	QPSK	1	12	66461	2112.5	2x2	LTE B66	20	67236	2190	4x4	LTE B2	20	900	1960	2x2	LTE B71	20	68761	634.5	2x2	-	-	-	-	-	23.77	23.66
CA_2A-[66A]-66A-71A	LTE B66	5	131997	1712.5	QPSK	1	12	66461	2112.5	4x4	LTE B66	20	67236	2190	2x2	LTE B2	20	900	1960	2x2	LTE B71	20	68761	634.5	2x2	-	-	-	-	-	23.76	23.66
CA_2A-[66A]-[66A]-71A	LTE B66	5	131997	1712.5	QPSK	1	12	66461	2112.5	4x4	LTE B66	20	67236	2190	4x4	LTE B2	20	900	1960	2x2	LTE B71	20	68761	634.5	2x2	-	-	-	-	-	23.77	23.66
CA_[2A]-66A-66A-71A	LTE B66	5	131997	1712.5	QPSK	1	12	66461	2112.5	2x2	LTE B66	20	67236	2190	2x2	LTE B2	20	900	1960	4x4	LTE B71	20	68761	634.5	2x2	-	-	-	-	-	23.76	23.66
CA_[2A]-66A-[66A]-71A	LTE B66	5	131997	1712.5	QPSK	1	12	66461	2112.5	2x2	LTE B66	20	67236	2190	4x4	LTE B2	20	900	1960	4x4	LTE B71	20	68761	634.5	2x2	-	-	-	-	-	23.72	23.66
CA_[2A]-[66A]-66A-71A	LTE B66	5	131997	1712.5	QPSK	1	12	66461	2112.5	4x4	LTE B66	20	67236	2190	2x2	LTE B2	20	900	1960	4x4	LTE B71	20	68761	634.5	2x2	-	-	-	-	-	23.75	23.66
CA_[2A]-[66A]-[66A]-71A	LTE B66	5	131997	1712.5	QPSK	1	12	66461	2112.5	4x4	LTE B66	20	67236	2190	4x4	LTE B2	20	900	1960	4x4	LTE B71	20	68761	634.5	2x2	-	-	-	-	-	23.72	23.66
CA_2C-66A-[66A]	LTE B66	5	131997	1712.5	QPSK	1	12	66461	2112.5	2x2	LTE B66	20	67236	2190	4x4	LTE B2	20	900	1960	2x2	LTE B2	20	702	1940.2	2x2	-	-	-	-	-	23.75	23.66
CA_2C-[66A]-66A	LTE B66	5	131997	1712.5	QPSK	1	12	66461	2112.5	4x4	LTE B66	20	67236	2190	2x2	LTE B2	20	900	1960	2x2	LTE B2	20	702	1940.2	2x2	-	-	-	-	-	23.75	23.66
CA_2C-[66A]-[66A]	LTE B66	5	131997	1712.5	QPSK	1	12	66461	2112.5	4x4	LTE B66	20	67236	2190	4x4	LTE B2	20	900	1960	2x2	LTE B2	20	702	1940.2	2x2	-	-	-	-	-	23.76	23.66
CA_[2C]-66A-66A	LTE B66	5	131997	1712.5	QPSK	1	12	66461	2112.5	2x2	LTE B66	20	67236	2190	2x2	LTE B2	20	900	1960	4x4	LTE B2	20	702	1940.2	4x4	-	-	-	-	-	23.69	23.66
CA_[2C]-66A-[66A]	LTE B66	5	131997	1712.5	QPSK	1	12	66461	2112.5	2x2	LTE B66	20	67236	2190	4x4	LTE B2	20	900	1960	4x4	LTE B2	20	702	1940.2	4x4	-	-	-	-	-	23.74	23.66
CA_[2C]-[66A]-66A	LTE B66	5	131997	1712.5	QPSK	1	12	66461	2112.5	4x4	LTE B66	20	67236	2190	2x2	LTE B2	20	900	1960	4x4	LTE B2	20	702	1940.2	4x4	-	-	-	-	-	23.66	23.66
CA_[2C]-[66A]-[66A]	LTE B66	5	131997	1712.5	QPSK	1	12	66461	2112.5	4x4	LTE B66	20	67236	2190	4x4	LTE B2	20	900	1960	4x4	LTE B2	20	702	1940.2	4x4	-	-	-	-	-	23.67	23.66
CA_2A-[66C]-71A	LTE B66	5	131997	1712.5	QPSK	1	12	66461	2112.5	4x4	LTE B66	20	66578	2124.2	4x4	LTE B2	20	900	1960	2x2	LTE B71	20	68761	634.5	2x2	-	-	-	-	-	23.75	23.66
CA_[2A]-66C-71A	LTE B66	5	131997	1712.5	QPSK	1	12	66461	2112.5	2x2	LTE B66	20	66578	2124.2	2x2	LTE B2	20	900	1960	4x4	LTE B71	20	68761	634.5	2x2	-	-	-	-	-	23.76	23.66
CA_[2A]-[66C]-71A	LTE B66	5	131997	1712.5	QPSK	1	12	66461	2112.5	4x4	LTE B66	20	66578	2124.2	4x4	LTE B2	20	900	1960	4x4	LTE B71	20	68761	634.5	2x2	-	-	-	-	-	23.77	23.66
CA_13A-48A-[66B]	LTE B66	5	131997	1712.5	QPSK	1	12	66461	2112.5	4x4	LTE B66	15	66554	2121.8	4x4	LTE B13	10	5230	751	2x2	LTE B48	20	55990	3625	2x2	-	-	-	-	-	23.77	23.66
CA_13A-[48A]-66B	LTE B66	5	131997	1712.5	QPSK	1	12	66461	2112.5	2x2	LTE B66	15	66554	2121.8	2x2	LTE B13	10	5230	751	2x2	LTE B48	20	55990	3625	4x4	-	-	-	-	-	23.77	23.66
CA_13A-[48A]-[66B]	LTE B66	5	131997	1712.5	QPSK	1	12	66461	2112.5	4x4	LTE B66	15	66554	2121.8	4x4	LTE B13	10	5230	751	2x2	LTE B48	20	55990	3625	4x4	-	-	-	-	-	23.78	23.66
CA_13A-48A-[66C]	LTE B66	5	131997	1712.5	QPSK	1	12	66461	2112.5	4x4	LTE B66	20	66578	2124.2	4x4	LTE B13	10	5230	751	2x2	LTE B48	20	55990	3625	2x2	-	-	-	-	-	23.76	23.66
CA_13A-[48A]-66C	LTE B66	5	131997	1712.5	QPSK	1	12	66461	2112.5	2x2	LTE B66	20	66578	2124.2	2x2	LTE B13	10	5230	751	2x2	LTE B48	20	55990	3625	4x4	-	-	-	-	-	23.73	23.66
CA_13A-[48A]-[66C]	LTE B66	5	131997	1712.5	QPSK	1	12	66461	2112.5	4x4	LTE B66	20	66578	2124.2	4x4	LTE B13	10	5230	751	2x2	LTE B48	20	55990	3625	4x4	-	-	-	-	-	23.74	23.66
CA_29A-30A-[66A]-66A	LTE B66	5	131997	1712.5	QPSK	1	12	66461	2112.5	4x4	LTE B66	20	67236	2190	2x2	LTE B29	10	9715	722.5	2x2	LTE B30	10	9820	2355	2x2	-	-	-	-	-	23.78	23.66
CA_29A-30A-66A-[66A]	LTE B66	5	131997	1712.5	QPSK	1	12	66461	2112.5	2x2	LTE B66	20	67236	2190	4x4	LTE B29	10	9715	722.5	2x2	LTE B30	10	9820	2355	2x2	-	-	-	-	-	23.75	23.66
CA_29A-30A-[66A]-[66A]	LTE B66	5	131997	1712.5	QPSK	1	12	66461	2112.5	4x4	LTE B66	20	67236	2190	4x4	LTE B29	10	9715	722.5	2x2	LTE B30	10	9820	2355	2x2	-	-	-	-	-	23.79	23.66
CA_29A-[30A]-66A-66A	LTE B66	5	131997	1712.5	QPSK	1	12	66461	2112.5	2x2	LTE B66	20	67236	2190	2x2	LTE B29	10	9715	722.5	2x2	LTE B30	10	9820	2355	4x4	-	-	-	-	-	23.76	23.66
CA_29A-[30A]-[66A]-66A	LTE B66	5	131997	1712.5	QPSK	1	12	66461	2112.5	4x4	LTE B66	20	67236	2190	2x2	LTE B29	10	9715	722.5	2x2	LTE B30	10	9820	2355	4x4	-	-	-	-	-	23.76	23.66
CA_29A-[30A]-66A-[66A]	LTE B66	5	131997	1712.5	QPSK	1	12	66461	2112.5	2x2	LTE B66	20	67236	2190	4x4	LTE B29	10	9715	722.5	2x2	LTE B30	10	9820	2355	4x4	-	-	-	-	-	23.77	23.66
CA_29A-[30A]-[66A]-[66A]	LTE B66	5	131997	1712.5	QPSK	1	12	66461	2112.5	4x4	LTE B66	20	67236	2190	4x4	LTE B29	10	9715	722.5	2x2	LTE B30	10	9820	2355	4x4	-	-	-	-	-	23.75	23.66
CA_48A-48A-66A-[66A]	LTE B66	5	131997	1712.5	QPSK	1	12	66461	2112.5	2x2	LTE B66	20	67236	2190	4x4	LTE B48	20	55990	3625	2x2	LTE B48	20	55340	3560	2x2	-	-	-	-	-	23.76	23.66
CA_48A-48A-[66A]-66A	LTE B66	5	131997	1712.5	QPSK	1	12	66461	2112.5	4x4	LTE B66	20	67236	2190	2x2	LTE B48	20	55990	3625	2x2	LTE B48	20	55340	3560	2x2	-	-	-	-	-	23.79	23.66
CA_48A-48A-[66A]-[66A]	LTE B66	5	131997	1712.5	QPSK	1	12	66461	2112.5	4x4	LTE B66	20	67236	2190	4x4	LTE B48	20	55990	3625	2x2	LTE B48	20	55340	3560	2x2	-	-	-	-	-	23.76	23.66
CA_[48A]-48A-66A-66A	LTE B66	5	131997	1712.5	QPSK	1	12	66461	2112.5	2x2	LTE B66	20	67236	2190	2x2	LTE B48	20	55990	3625	4x4	LTE B48	20	55340	3560	2x2	-	-	-	-	-	23.78	23.66
CA_[48A]-48A-66A-[66A]	LTE B66	5	131997	1712.5	QPSK	1	12	66461	2112.5	2x2	LTE B66	20	67236	2190	4x4	LTE B48	20	55990	3625	4x4	LTE B48	20	55340	3560	2x2	-	-	-	-	-	23.74	23.66
CA_[48A]-48A-[66A]-66A	LTE B66	5	131997	1712.5	QPSK	1	12	66461	2112.5	4x4	LTE B66	20	67236	2190	2x2	LTE B48	20	55990	3625	4x4	LTE B48	20	55340	3560	2x2	-	-	-	-	-	23.79	23.66
CA_[48A]-48A-[66A]-[66A]	LTE B66	5	131997	1712.5	QPSK	1	12	66461	2112.5	4x4	LTE B66	20	67236	2190	4x4	LTE B48	20	55990	3625	4x4	LTE B48	20	55340	3560	2x2	-	-	-	-	-	23.77	23.66
CA_[48A]-[48A]-66A-66A	LTE B66	5	131997	1712.5	QPSK	1	12	66461	2112.5	2x2	LTE B66	20	67236	2190	2x2	LTE B48	20	55990	3625	4x4	LTE B48	20	55340	3560	4x4	-	-	-	-	-	23.75	23.66
CA_[48A]-[48A]-66A-[66A]	LTE B66	5	131997	1712.5	QPSK	1	12	66461	2112.5	2x2	LTE B66	20	67236	2190	4x4	LTE B48	20	55990	3625	4x4	LTE B48	20	55340	3560	4x4	-	-	-	-	-	23.72	23.66
CA_[48A]-[48A]-[66A]-66A	LTE B66	5	131997	1712.5	QPSK	1	12	66461	2112.5	4x4	LTE B66	20	67236	2190	2x2	LTE B48	20	55990	3625	4x4	LTE B48	20	55340	3560	4x4	-	-	-	-	-	23.76	23.66
CA_[48A]-[48A]-[66A]-[66A]	LTE B66	5	131997	1712.5	QPSK	1	12	66461	2112.5	4x4	LTE B66	20	67236	2190	4x4	LTE B48	20	55990	3625	4x4	LTE B48	20	55340	3560	4x4	-	-	-	-	-	23.71	23.66
CA_48C-[66B]	LTE B66	5	131997	1712.5	QPSK	1	12	66461	2112.5	4x4	LTE B66	15	67261	2192.5	4x4	LTE B48	20	55990	3625	2x2	LTE B48	20	56188	3644.8	2x2	-	-	-	-	-	23.77	23.66
CA_[48C]-66B	LTE B66	5	131997	1712.5	QPSK	1	12	66461	2112.5	2x2	LTE B66	15	67261	2192.5	2x2	LTE B48	20	55990	3625	4x4	LTE B48	20	56188	3644.8	4x4	-	-	-	-	-	23.71	23.66
CA_[48C]-[66B]	LTE B66	5	131997	1712.5	QPSK	1	12	66461	2112.5	4x4	LTE B66	15	67261	2192.5	4x4	LTE B48	20	55990	3625	4x4	LTE B48	20	56188	3644.8	4x4	-	-	-	-	-	23.78	23.66
CA_48C-[66C]	LTE B66	5	131997	1712.5	QPSK	1	12	66461	2112.5	4x4	LTE B66	20	66578	2124.2	4x4	LTE B48	20	55990	3625	2x2	LTE B48	20	56188	3644.8	2x2	-	-	-	-	-	23.79	23.66
CA_[48C]-66C	LTE B66	5	131997	1712.5	QPSK	1	12	66461	2112.5	2x2	LTE B66	20	66578	2124.2	2x2	LTE B48	20	55990	3625	4x4	LTE B48	20	56188	3644.8	4x4	-	-	-	-	-	23.75	23.66
CA_[48C]-[66C]	LTE B66	5	131997	1712.5	QPSK	1	12	66461	2112.5	4x4	LTE B66	20	66578	2124.2	4x4	LTE B48	20	55990	3625	4x4	LTE B48	20	56188	3644.8	4x4	-	-	-	-	-	23.77	23.66
CA_2A-2A-5A-30A-[66A]	LTE B66	5	131997	1712.5	QPSK	1	12	66461	2112.5	4x4	LTE B2	20	900	1960	2x2	LTE B2	20	700	1940	2x2	LTE B5	10	2525	881.5	2x2	LTE B30	10	9820	2355	2x2	23.60	23.66
CA_2A-2A-5A-[30A]-66A	LTE B66	5	131997	1712.5	QPSK	1	12	66461	2112.5	2x2	LTE B2	20	900	1960	2x2	LTE B2	20	700	1940	2x2	LTE B5	10	2525	881.5	2x2	LTE B30	10	9820	2355	4x4	23.73	23.66
CA_2A-2A-5A-[30A]-[66A]	LTE B66	5	131997	1712.5	QPSK	1	12	66461	2112.5	4x4	LTE B2	20	900	1960	2x2	LTE B2	20	700	1940	2x2	LTE B5	10	2525	881.5	2x2	LTE B30	10	9820	2355	4x4	23.50	23.66
CA_[2A]-2A-5A-30A-66A	LTE B66	5	131997	1712.5	QPSK	1	12	66461	2112.5	2x2	LTE B2	20	900	1960	4x4	LTE B2	20	700	1940	2x2	LTE B5	10	2525	881.5	2x2	LTE B30	10	9820	2355	2x2	23.64	23.66
CA_[2A]-2A-5A-30A-[66A]	LTE B66	5	131997	1712.5	QPSK	1	12	66461	2112.5	4x4	LTE B2	20	900	1960	4x4	LTE B2	20	700	1940	2x2	LTE B5	10	2525	881.5	2x2	LTE B30	10	9820	2355	2x2	23.61	23.66
CA_[2A]-2A-5A-[30A]-66A	LTE B66	5	131997	1712.5	QPSK	1	12	66461	2112.5	2x2	LTE B2	20	900	1960	4x4	LTE B2	20	700	1940	2x2	LTE B5	10	2525	881.5	2x2	LTE B30	10	9820	2355	4x4	23.70	23.66
CA_[2A]-2A-5A-[30A]-[66A]	LTE B66	5	131997	1712.5	QPSK	1	12	66461	2112.5	4x4	LTE B2	20	900	1960	4x4	LTE B2	20	700	1940	2x2	LTE B5	10	2525	881.5	2x2	LTE B30	10	9820	2355	4x4	23.62	23.66
CA_[2A]-[2A]-5A-30A-66A	LTE B66	5	131997	1712.5	QPSK	1	12	66461	2112.5	2x2	LTE B2	20	900	1960	4x4	LTE B2	20	700	1940	4x4	LTE B5	10	2525	881.5	2x2	LTE B30	10	9820	2355	2x2	23.65	23.66
CA_[2A]-[2A]-5A-30A-[66A]	LTE B66	5	131997	1712.5	QPSK	1	12	66461	2112.5	4x4	LTE B2	20	900	1960	4x4	LTE B2	20	700	1940	2x2	LTE B5	10	2525	881.5	2x2	LTE B30	10	9820	2355	4x4	23.57	23.66
CA_[2A]-[2A]-5A-[30A]-66A	LTE B66	5	131997	1712.5	QPSK	1	12	66461	2112.5	2x2	LTE B2	20	900	1960	4x4	LTE B2	20	700	1940	4x4	LTE B5	10	2525	881.5	2x2	LTE B30	10	9820	2355	4x4	23.66	23.66
CA_[2A]-[2A]-5A-[30A]-[66A]	LTE B66	5	131997	1712.5	QPSK	1	12	66461	2112.5	4x4	LTE B2	20	900	1960	4x4	LTE B2	20	700	1940	4x4	LTE B5	10	2525	881.5	2x2	LTE B30	10	9820	2355	4x4	23.54	23.66
CA_2A-2A-5A-66A-[66A]	LTE B66	5	131997	1712.5	QPSK	1	12	66461	2112.5	2x2	LTE B66	20	67236	2190	4x4	LTE B2	20	900	1960	2x2	LTE B2	20	700	1940	2x2	LTE B5	10	2525	881.5	2x2	23.61	23.66
CA_2A-2A-5A-[66A]-66A	LTE B66	5	131997	1712.5	QPSK	1	12	66461	2112.5	4x4	LTE B66	20	67236	2190	2x2	LTE B2	20	900	1960	2x2	LTE B2	20	700	1940	2x2	LTE B5	10	2525	881.5	2x2	23.59	23.66
CA_2A-2A-5A-[66A]-[66A]	LTE B66	5	131997	1712.5	QPSK	1	12	66461	2112.5	4x4	LTE B66	20	67236	2190	4x4	LTE B2	20	900	1960	2x2	LTE B2	20	700	1940	2x2	LTE B5	10	2525	881.5	2x2	23.55	23.66
CA_[2A]-2A-5A-66A-66A	LTE B66	5	131997	1712.5	QPSK	1	12	66461	2112.5	2x2	LTE B66	20	67236	2190	2x2	LTE B2	20	900	1960	4x4	LTE B2	20	700	1940	2x2	LTE B5	10	2525	881.5	2x2	23.64	23.66
CA_[2A]-2A-5A-66A-[66A]	LTE B66	5	131997	1712.5	QPSK	1	12	66461	2112.5	2x2	LTE B66	20	67236	2190	4x4	LTE B2	20	900	1960	4x4	LTE B2	20	700	1940	2x2	LTE B5	10	2525	881.5	2x2	23.65	23.66
CA_[2A]-2A-5A-[66A]-66A	LTE B66	5	131997	1712.5	QPSK	1	12	66461	2112.5	4x4	LTE B66	20	67236	2190	2x2	LTE B2	20	900	1960	4x4	LTE B2	20	700	1940	2x2	LTE B5	10	2525	881.5	2x2	23.57	23.66
CA_[2A]-2A-5A-[66A]-[66A]	LTE B66	5	131997	1712.5	QPSK	1	12	66461	2112.5	4x4	LTE B66	20	67236	2190	4x4	LTE B2	20	900	1960	4x4	LTE B2	20	700	1940	2x2	LTE B5	10	2525	881.5	2x2	23.59	23.66
CA_[2A]-[2A]-5A-66A-66A	LTE B66	5	131997	1712.5	QPSK	1	12	66461	2112.5	2x2	LTE B66	20	67236	2190	2x2	LTE B2	20	900	1960	4x4	LTE B2	20	700	1940	4x4	LTE B5	10	2525	881.5	2x2	23.63	23.66
CA_[2A]-[2A]-5A-[66A]-66A	LTE B66	5	131997	1712.5	QPSK	1	12	66461	2112.5	4x4	LTE B66	20	67236	2190	2x2	LTE B2	20	900	1960	4x4	LTE B2	20	700	1940	4x4	LTE B5	10	2525	881.5	2x2	23.57	23.66
CA_[2A]-[2A]-5A-66A-[66A]	LTE B66	5	131997	1712.5	QPSK	1	12	66461	2112.5	2x2	LTE B66	20	67236	2190	4x4	LTE B2	20	900	1960	4x4	LTE B2	20	700	1940	4x4	LTE B5	10	2525	881.5	2x2	23.64	23.66
CA_[2A]-[2A]-5A-[66A]-[66A]	LTE B66	5	131997	1712.5	QPSK	1	12	66461	2112.5	4x4	LTE B66	20	67236	2190	4x4	LTE B2	20	900	1960	4x4	LTE B2	20	700	1940	4x4	LTE B5	10	2525	881.5	2x2	23.58	23.66
CA_2A-2A-5A-[66B]	LTE B66	5	131997	1712.5	QPSK	1	12	66461	2112.5	4x4	LTE B66	15	66554	2121.8	4x4	LTE B2	20	900	1960	2x2	LTE B2	20	700	1940	2x2	LTE B5	10	2525	881.5	2x2	23.63	23.66
CA_[2A]-2A-5A-66B	LTE B66	5	131997	1712.5	QPSK	1	12	66461	2112.5	2x2	LTE B66	15	66554	2121.8	2x2	LTE B2	20	900	1960	4x4	LTE B2	20	700	1940	2x2	LTE B5	10	2525	881.5	2x2	23.49	23.66
CA_[2A]-2A-5A-[66B]	LTE B66	5	131997	1712.5	QPSK	1	12	66461	2112.5	4x4	LTE B66	15	66554	2121.8	4x4	LTE B2	20	900	1960	4x4	LTE B2	20	700	1940	2x2	LTE B5	10	2525	881.5	2x2	23.60	23.66
CA_[2A]-[2A]-5A-66B	LTE B66	5	131997	1712.5	QPSK	1	12	66461	2112.5	2x2	LTE B66	15	66554	2121.8	2x2	LTE B2	20	900	1960	4x4	LTE B2	20	700	1940	4x4	LTE B5	10	2525	881.5	2x2	23.62	23.66
CA_[2A]-[2A]-5A-[66B]	LTE B66	5	131997	1712.5	QPSK	1	12	66461	2112.5	4x4	LTE B66	15	66554	2121.8	4x4	LTE B2	20	900	1960	4x4	LTE B2	20	700	1940	4x4	LTE B5	10	2525	881.5	2x2	23.58	23.66
CA_2A-2A-5A-[66C]	LTE B66	5	131997	1712.5	QPSK	1	12	66461	2112.5	4x4	LTE B66	20	66578	2124.2	4x4	LTE B2	20	900	1960	2x2	LTE B2	20	700	1940	2x2	LTE B5	10	2525	881.5	2x2	23.62	23.66
CA_[2A]-2A-5A-66C	LTE B66	5	131997	1712.5	QPSK	1	12	66461	2112.5	2x2	LTE B66	20	66578	2124.2	2x2	LTE B2	20	900	1960	4x4	LTE B2	20	700	1940	2x2	LTE B5	10	2525	881.5	2x2	23.63	23.66
CA_[2A]-2A-5A-[66C]	LTE B66	5	131997	1712.5	QPSK	1	12	66461	2112.5	4x4	LTE B66	20	66578	2124.2	4x4	LTE B2	20	900	1960	4x4	LTE B2	20	700	1940	2x2	LTE B5	10	2525	881.5	2x2	23.61	23.66
CA_[2A]-[2A]-5A-66C	LTE B66	5	131997	1712.5	QPSK	1	12	66461	2112.5	2x2	LTE B66	20	66578	2124.2	2x2	LTE B2	20	900	1960	4x4	LTE B2	20	700	1940	4x4	LTE B5	10	2525	881.5	2x2	23.62	23.66
CA_[2A]-[2A]-5A-[66C]	LTE B66	5	131997	1712.5	QPSK	1	12	66461	2112.5	4x4	LTE B66	20	66578	2124.2	4x4	LTE B2	20	900	1960	4x4	LTE B2	20	700	1940	4x4	LTE B5	10	2525	881.5	2x2	23.60	23.66
CA_2A-2A-12A-30A-[66A]	LTE B66	5	131997	1712.5	QPSK	1	12	66461	2112.5	4x4	LTE B2	20	900	1960	2x2	LTE B2	20	700	1940	2x2	LTE B12	10	5095	737.5	2x2	LTE B30	10	9820	2355	2x2	23.53	23.66
CA_2A-2A-12A-[30A]-66A	LTE B66	5	131997	1712.5	QPSK	1	12	66461	2112.5	2x2	LTE B2	20	900	1960	2x2	LTE B2	20	700	1940	2x2	LTE B12	10	5095	737.5	2x2	LTE B30	10	9820	2355	4x4	23.55	23.66
CA_2A-2A-12A-[30A]-[66A]	LTE B66	5	131997	1712.5	QPSK	1	12	66461	2112.5	4x4	LTE B2	20	900	1960	2x2	LTE B2	20	700	1940	2x2	LTE B12	10	5095	737.5	2x2	LTE B30	10	9820	2355	4x4	23.57	23.66
CA_[2A]-2A-12A-30A-66A	LTE B66	5	131997	1712.5	QPSK	1	12	66461	2112.5	2x2	LTE B2	20	900	1960	4x4	LTE B2	20	700	1940	2x2	LTE B12	10	5095	737.5	2x2	LTE B30	10	9820	2355	2x2	23.61	23.66
CA_[2A]-2A-12A-30A-[66A]	LTE B66	5	131997	1712.5	QPSK	1	12	66461	2112.5	4x4	LTE B2	20	900	1960	4x4	LTE B2	20	700	1940	2x2	LTE B12	10	5095	737.5	2x2	LTE B30	10	9820	2355	2x2	23.58	23.66
CA_[2A]-2A-12A-[30A]-66A	LTE B66	5	131997	1712.5	QPSK	1	12	66461	2112.5	2x2	LTE B2	20	900	1960	4x4	LTE B2	20	700	1940	2x2	LTE B12	10	5095	737.5	2x2	LTE B30	10	9820	2355	4x4	23.58	23.66
CA_[2A]-2A-12A-[30A]-[66A]	LTE B66	5	131997	1712.5	QPSK	1	12	66461	2112.5	4x4	LTE B2	20	900	1960	4x4	LTE B2	20	700	1940	2x2	LTE B12	10	5095	737.5	2x2	LTE B30	10	9820	2355	4x4	23.55	23.66
CA_[2A]-[2A]-12A-30A-66A	LTE B66	5	131997	1712.5	QPSK	1	12	66461	2112.5	2x2	LTE B2	20	900	1960	4x4	LTE B2	20	700	1940	4x4	LTE B12	10	5095	737.5	2x2	LTE B30	10	9820	2355	2x2	23.50	23.66
CA_[2A]-[2A]-12A-30A-[66A]	LTE B66	5	131997	1712.5	QPSK	1	12	66461	2112.5	4x4	LTE B2	20	900	1960	4x4	LTE B2	20	700	1940	4x4	LTE B12	10	5095	737.5	2x2	LTE B30	10	9820	2355	2x2	23.52	23.66
CA_[2A]-[2A]-12A-[30A]-66A	LTE B66	5	131997	1712.5	QPSK	1	12	66461	2112.5	2x2	LTE B2	20	900	1960	4x4	LTE B2	20	700	1940	4x4	LTE B12	10	5095	737.5	2x2	LTE B30	10	9820	2355	4x4	23.56	23.66
CA_[2A]-[2A]-12A-[30A]-[66A]	LTE B66	5	131997	1712.5	QPSK	1	12	66461	2112.5	4x4	LTE B2	20	900	1960	4x4	LTE B2	20	700	1940	4x4	LTE B12	10	5095	737.5	2x2	LTE B30	10	9820	2355	4x4	23.59	23.66
CA_2A-2A-12A-66A-[66A]	LTE B66	5	131997	1712.5	QPSK	1	12	66461	2112.5	2x2	LTE B66	20	67236	2190	4x4	LTE B2	20	900	1960	2x2	LTE B2	20	700	1940	2x2	LTE B12	10	5095	737.5	2x2	23.72	23.66
CA_2A-2A-12A-[66A]-66A	LTE B66	5	131997	1712.5	QPSK	1	12	66461	2112.5	4x4	LTE B66	20	67236	2190	2x2	LTE B2	20	900	1960	2x2	LTE B2	20	700	1940	2x2	LTE B12	10	5095	737.5	2x2	23.73	23.66
CA_2A-2A-12A-[66A]-[66A]	LTE B66	5	131997	1712.5	QPSK	1	12	66461	2112.5	4x4	LTE B66	20	67236	2190	4x4	LTE B2	20	900	1960	2x2	LTE B2	20	700	1940	2x2	LTE B12	10	5095	737.5	2x2	23.76	23.66
CA_[2A]-2A-12A-66A-66A	LTE B66	5	131997	1712.5	QPSK	1	12	66461	2112.5	2x2	LTE B66	20	67236	2190	2x2	LTE B2	20	900	1960	4x4	LTE B2	20	700	1940	2x2	LTE B12	10	5095	737.5	2x2	23.74	23.66
CA_[2A]-2A-12A-66A-[66A]	LTE B66	5	131997	1712.5	QPSK	1	12	66461	2112.5	2x2	LTE B66	20	67236	2190	4x4	LTE B2	20	900	1960	4x4	LTE B2	20	700	1940	2x2	LTE B12	10	5095	737.5	2x2	23.71	23.66
CA_[2A]-2A-12A-[66A]-66A	LTE B66	5	131997	1712.5	QPSK	1	12	66461	2112.5	4x4	LTE B66	20	67236	2190	2x2	LTE B2	20	900	1960	4x4	LTE B2	20	700	1940	2x2	LTE B12	10	5095	737.5	2x2	23.71	23.66
CA_[2A]-2A-12A-[66A]-[66A]	LTE B66	5	131997	1712.5	QPSK	1	12	66461	2112.5	4x4	LTE B66	20	67236	2190	4x4	LTE B2	20	900	1960	4x4	LTE B2	20	700	1940	2x2	LTE B12	10	5095	737.5	2x2	23.70	23.66
CA_[2A]-[2A]-12A-66A-66A	LTE B66	5	131997	1712.5	QPSK	1	12	66461	2112.5	2x2	LTE B66	20	67236	2190	2x2	LTE B2	20	900	1960	4x4	LTE B2	20	700	1940	4x4	LTE B12	10	5095	737.5	2x2	23.76	23.66
CA_[2A]-[2A]-12A-[66A]-66A	LTE B66	5	131997	1712.5	QPSK	1	12	66461	2112.5	4x4	LTE B66	20	67236	2190	2x2	LTE B2	20	900	1960	4x4	LTE B2	20	700	1940	4x4	LTE B12	10	5095	737.5	2x2	23.72	23.66
CA_[2A]-[2A]-12A-66A-[66A]	LTE B66	5	131997	1712.5	QPSK	1	12	66461	2112.5	2x2	LTE B66	20	67236	2190	4x4	LTE B2	20	900	1960	4x4	LTE B2	20	700	1940	4x4	LTE B12	10	5095	737.5	2x2	23.78	23.66
CA_[2A]-[2A]-12A-[66A]-[66A]	LTE B66	5	131997	1712.5	QPSK	1	12	66461	2112.5	4x4	LTE B66	20	67236	2190	4x4	LTE B2	20	900	1960	4x4	LTE B2	20	700	1940	4x4	LTE B12	10	5095	737.5	2x2	23.76	23.66
CA_2A-2A-12B-[66A]	LTE B66	5	131997	1712.5	QPSK	1	12	66461	2112.5	4x4	LTE B2	20	900	1960	2x2	LTE B2	20	700	1940	2x2	LTE B12	5	5095	737.5	2x2	LTE B12	5	5047	732.7	2x2	23.57	23.66
CA_[2A]-2A-12B-66A	LTE B66	5	131997	1712.5	QPSK	1	12	66461	2112.5	2x2	LTE B2	20	900	1960	4x4	LTE B2	20	700	1940	2x2	LTE B12	5	5095	737.5	2x2	LTE B12	5	5047	732.7	2x2	23.65	23.66
CA_[2A]-2A-12B-[66A]	LTE B66	5	131997	1712.5	QPSK	1	12	66461	2112.5	4x4	LTE B2	20	900	1960	4x4	LTE B2	20	700	1940	2x2	LTE B12	5	5095	737.5	2x2	LTE B12	5	5047	732.7	2x2	23.61	23.66
CA_[2A]-[2A]-12B-66A	LTE B66	5	131997	1712.5	QPSK	1	12	66461	2112.5	2x2	LTE B2	20	900	1960	4x4	LTE B2	20	700	1940	4x4	LTE B12	5	5095	737.5	2x2	LTE B12	5	5047	732.7	2x2	23.63	23.66
CA_[2A]-[2A]-12B-[66A]	LTE B66	5	131997	1712.5	QPSK	1	12	66461	2112.5	4x4	LTE B2	20	900	1960	4x4	LTE B2	20	700	1940	4x4	LTE B12	5	5095	737.5	2x2	LTE B12	5	5047	732.7	2x2	23.58	23.66
CA_2A-2A-13A-66A-[66A]	LTE B66	5	131997	1712.5	QPSK	1	12	66461	2112.5	2x2	LTE B66	20	67236	2190	4x4	LTE B2	20	900	1960	2x2	LTE B2	20	700	1940	2x2	LTE B13	10	5230	751	2x2	23.61	23.66
CA_2A-2A-13A-[66A]-66A	LTE B66	5	131997	1712.5	QPSK	1	12	66461	2112.5	4x4	LTE B66	20	67236	2190	2x2	LTE B2	20	900	1960	2x2	LTE B2	20	700	1940	2x2	LTE B13	10	5230	751	2x2	23.59	23.66
CA_2A-2A-13A-[66A]-[66A]	LTE B66	5	131997	1712.5	QPSK	1	12	66461	2112.5	4x4	LTE B66	20	67236	2190	4x4	LTE B2	20	900	1960	2x2	LTE B2	20	700	1940	2x2	LTE B13	10	5230	751	2x2	23.58	23.66
CA_[2A]-2A-13A-66A-66A	LTE B66	5	131997	1712.5	QPSK	1	12	66461	2112.5	2x2	LTE B66	20	67236	2190	2x2	LTE B2	20	900	1960	4x4	LTE B2	20	700	1940	2x2	LTE B13	10	5230	751	2x2	23.65	23.66
CA_[2A]-2A-13A-66A-[66A]	LTE B66	5	131997	1712.5	QPSK	1	12	66461	2112.5	2x2	LTE B66	20	67236	2190	4x4	LTE B2	20	900	1960	4x4	LTE B2	20	700	1940	2x2	LTE B13	10	5230	751	2x2	23.64	23.66

element

Combination	PCC										SCC 1					SCC 2					SCC 3					SCC 4					SCC 5					Power	
	PCC Band	PCC BW [MHz]	PCC (UL) Ch.	PCC (UL) Freq. [MHz]	Mod.	PCC UL# RB	PCC UL RB Offset	PCC (DL) Ch.	PCC (DL) Freq. [MHz]	DL Ant. Config.	SCC Band	SCC BW [MHz]	SCC (DL) Ch.	SCC (DL) Freq. [MHz]	DL Ant. Config.	SCC Band	SCC BW [MHz]	SCC (DL) Ch.	SCC (DL) Freq. [MHz]	DL Ant. Config.	SCC Band	SCC BW [MHz]	SCC (DL) Ch.	SCC (DL) Freq. [MHz]	DL Ant. Config.	SCC Band	SCC BW [MHz]	SCC (DL) Ch.	SCC (DL) Freq. [MHz]	DL Ant. Config.	SCC Band	SCC BW [MHz]	SCC (DL) Ch.	SCC (DL) Freq. [MHz]	DL Ant. Config.	LTE Tx.Power with DL CA Enabled (dBm)	LTE Single Carrier Tx Power (dBm)
CA_[2A]-2A-13A-[66A]-66A	LTE B66	5	131997	1712.5	QPSK	1	12	66461	2112.5	4x4	LTE B66	20	67236	2190	2x2	LTE B2	20	900	1960	4x4	LTE B2	20	700	1940	2x2	LTE B13	10	5230	751	2x2	-	-	-	-	-	23.60	23.66
CA_[2A]-2A-13A-[66A]-[66A]	LTE B66	5	131997	1712.5	QPSK	1	12	66461	2112.5	4x4	LTE B66	20	67236	2190	4x4	LTE B2	20	900	1960	4x4	LTE B2	20	700	1940	2x2	LTE B13	10	5230	751	2x2	-	-	-	-	-	23.57	23.66
CA_[2A]-[2A]-13A-66A-66A	LTE B66	5	131997	1712.5	QPSK	1	12	66461	2112.5	2x2	LTE B66	20	67236	2190	2x2	LTE B2	20	900	1960	4x4	LTE B2	20	700	1940	4x4	LTE B13	10	5230	751	2x2	-	-	-	-	-	23.67	23.66
CA_[2A]-[2A]-13A-[66A]-66A	LTE B66	5	131997	1712.5	QPSK	1	12	66461	2112.5	4x4	LTE B66	20	67236	2190	2x2	LTE B2	20	900	1960	4x4	LTE B2	20	700	1940	4x4	LTE B13	10	5230	751	2x2	-	-	-	-	-	23.62	23.66
CA_[2A]-[2A]-13A-66A-[66A]	LTE B66	5	131997	1712.5	QPSK	1	12	66461	2112.5	2x2	LTE B66	20	67236	2190	4x4	LTE B2	20	900	1960	4x4	LTE B2	20	700	1940	4x4	LTE B13	10	5230	751	2x2	-	-	-	-	-	23.72	23.66
CA_[2A]-[2A]-13A-[66A]-[66A]	LTE B66	5	131997	1712.5	QPSK	1	12	66461	2112.5	4x4	LTE B66	20	67236	2190	4x4	LTE B2	20	900	1960	4x4	LTE B2	20	700	1940	4x4	LTE B13	10	5230	751	2x2	-	-	-	-	-	23.60	23.66
CA_2A-2A-14A-30A-[66A]	LTE B66	5	131997	1712.5	QPSK	1	12	66461	2112.5	4x4	LTE B2	20	900	1960	2x2	LTE B2	20	700	1940	2x2	LTE B14	10	5330	763	2x2	LTE B30	10	9820	2355	2x2	-	-	-	-	-	23.60	23.66
CA_2A-2A-14A-[30A]-66A	LTE B66	5	131997	1712.5	QPSK	1	12	66461	2112.5	2x2	LTE B2	20	900	1960	2x2	LTE B2	20	700	1940	2x2	LTE B14	10	5330	763	2x2	LTE B30	10	9820	2355	4x4	-	-	-	-	-	23.68	23.66
CA_2A-2A-14A-[30A]-[66A]	LTE B66	5	131997	1712.5	QPSK	1	12	66461	2112.5	4x4	LTE B2	20	900	1960	2x2	LTE B2	20	700	1940	2x2	LTE B14	10	5330	763	2x2	LTE B30	10	9820	2355	4x4	-	-	-	-	-	23.62	23.66
CA_[2A]-2A-14A-30A-66A	LTE B66	5	131997	1712.5	QPSK	1	12	66461	2112.5	2x2	LTE B2	20	900	1960	4x4	LTE B2	20	700	1940	2x2	LTE B14	10	5330	763	2x2	LTE B30	10	9820	2355	2x2	-	-	-	-	-	23.71	23.66
CA_[2A]-2A-14A-30A-[66A]	LTE B66	5	131997	1712.5	QPSK	1	12	66461	2112.5	4x4	LTE B2	20	900	1960	4x4	LTE B2	20	700	1940	2x2	LTE B14	10	5330	763	2x2	LTE B30	10	9820	2355	2x2	-	-	-	-	-	23.59	23.66
CA_[2A]-2A-14A-[30A]-66A	LTE B66	5	131997	1712.5	QPSK	1	12	66461	2112.5	2x2	LTE B2	20	900	1960	4x4	LTE B2	20	700	1940	2x2	LTE B14	10	5330	763	2x2	LTE B30	10	9820	2355	4x4	-	-	-	-	-	23.69	23.66
CA_[2A]-2A-14A-[30A]-[66A]	LTE B66	5	131997	1712.5	QPSK	1	12	66461	2112.5	4x4	LTE B2	20	900	1960	4x4	LTE B2	20	700	1940	2x2	LTE B14	10	5330	763	2x2	LTE B30	10	9820	2355	4x4	-	-	-	-	-	23.63	23.66
CA_[2A]-[2A]-14A-30A-66A	LTE B66	5	131997	1712.5	QPSK	1	12	66461	2112.5	2x2	LTE B2	20	900	1960	4x4	LTE B2	20	700	1940	4x4	LTE B14	10	5330	763	2x2	LTE B30	10	9820	2355	2x2	-	-	-	-	-	23.64	23.66
CA_[2A]-[2A]-14A-30A-[66A]	LTE B66	5	131997	1712.5	QPSK	1	12	66461	2112.5	4x4	LTE B2	20	900	1960	4x4	LTE B2	20	700	1940	4x4	LTE B14	10	5330	763	2x2	LTE B30	10	9820	2355	2x2	-	-	-	-	-	23.65	23.66
CA_[2A]-[2A]-14A-[30A]-66A	LTE B66	5	131997	1712.5	QPSK	1	12	66461	2112.5	2x2	LTE B2	20	900	1960	4x4	LTE B2	20	700	1940	4x4	LTE B14	10	5330	763	2x2	LTE B30	10	9820	2355	4x4	-	-	-	-	-	23.65	23.66
CA_[2A]-[2A]-14A-[30A]-[66A]	LTE B66	5	131997	1712.5	QPSK	1	12	66461	2112.5	4x4	LTE B2	20	900	1960	4x4	LTE B2	20	700	1940	4x4	LTE B14	10	5330	763	2x2	LTE B30	10	9820	2355	4x4	-	-	-	-	-	23.64	23.66
CA_2A-2A-14A-66A-[66A]	LTE B66	5	131997	1712.5	QPSK	1	12	66461	2112.5	2x2	LTE B66	20	67236	2190	4x4	LTE B2	20	900	1960	2x2	LTE B2	20	700	1940	2x2	LTE B14	10	5330	763	2x2	-	-	-	-	-	23.73	23.66
CA_2A-2A-14A-[66A]-66A	LTE B66	5	131997	1712.5	QPSK	1	12	66461	2112.5	4x4	LTE B66	20	67236	2190	2x2	LTE B2	20	900	1960	2x2	LTE B2	20	700	1940	2x2	LTE B14	10	5330	763	2x2	-	-	-	-	-	23.77	23.66
CA_2A-2A-14A-[66A]-[66A]	LTE B66	5	131997	1712.5	QPSK	1	12	66461	2112.5	4x4	LTE B66	20	67236	2190	4x4	LTE B2	20	900	1960	2x2	LTE B2	20	700	1940	2x2	LTE B14	10	5330	763	2x2	-	-	-	-	-	23.76	23.66
CA_[2A]-2A-14A-66A-66A	LTE B66	5	131997	1712.5	QPSK	1	12	66461	2112.5	2x2	LTE B66	20	67236	2190	2x2	LTE B2	20	900	1960	4x4	LTE B2	20	700	1940	2x2	LTE B14	10	5330	763	2x2	-	-	-	-	-	23.75	23.66
CA_[2A]-2A-14A-66A-[66A]	LTE B66	5	131997	1712.5	QPSK	1	12	66461	2112.5	2x2	LTE B66	20	67236	2190	4x4	LTE B2	20	900	1960	4x4	LTE B2	20	700	1940	2x2	LTE B14	10	5330	763	2x2	-	-	-	-	-	23.72	23.66
CA_[2A]-2A-14A-[66A]-66A	LTE B66	5	131997	1712.5	QPSK	1	12	66461	2112.5	4x4	LTE B66	20	67236	2190	2x2	LTE B2	20	900	1960	4x4	LTE B2	20	700	1940	2x2	LTE B14	10	5330	763	2x2	-	-	-	-	-	23.82	23.66
CA_[2A]-2A-14A-[66A]-[66A]	LTE B66	5	131997	1712.5	QPSK	1	12	66461	2112.5	4x4	LTE B66	20	67236	2190	4x4	LTE B2	20	900	1960	4x4	LTE B2	20	700	1940	2x2	LTE B14	10	5330	763	2x2	-	-	-	-	-	23.82	23.66
CA_[2A]-[2A]-14A-66A-66A	LTE B66	5	131997	1712.5	QPSK	1	12	66461	2112.5	2x2	LTE B66	20	67236	2190	2x2	LTE B2	20	900	1960	4x4	LTE B2	20	700	1940	4x4	LTE B14	10	5330	763	2x2	-	-	-	-	-	23.71	23.66
CA_[2A]-[2A]-14A-[66A]-66A	LTE B66	5	131997	1712.5	QPSK	1	12	66461	2112.5	4x4	LTE B66	20	67236	2190	2x2	LTE B2	20	900	1960	4x4	LTE B2	20	700	1940	4x4	LTE B14	10	5330	763	2x2	-	-	-	-	-	23.83	23.66
CA_[2A]-[2A]-14A-66A-[66A]	LTE B66	5	131997	1712.5	QPSK	1	12	66461	2112.5	2x2	LTE B66	20	67236	2190	4x4	LTE B2	20	900	1960	4x4	LTE B2	20	700	1940	4x4	LTE B14	10	5330	763	2x2	-	-	-	-	-	23.75	23.66
CA_[2A]-[2A]-14A-[66A]-[66A]	LTE B66	5	131997	1712.5	QPSK	1	12	66461	2112.5	4x4	LTE B66	20	67236	2190	4x4	LTE B2	20	900	1960	4x4	LTE B2	20	700	1940	4x4	LTE B14	10	5330	763	2x2	-	-	-	-	-	23.81	23.66
CA_2A-2A-29A-30A-66A	LTE B66	5	131997	1712.5	QPSK	1	12	66461	2112.5	0	LTE B2	20	900	1960	0	LTE B2	20	700	1940	0	LTE B29	10	9715	722.5	0	LTE B30	10	9820	2355	0	-	-	-	-	-	0.00	23.66
CA_2A-2A-29A-30A-66A	LTE B66	5	131997	1712.5	QPSK	1	12	66461	2112.5	0	LTE B2	20	900	1960	0	LTE B2	20	700	1940	0	LTE B29	10	9715	722.5	0	LTE B30	10	9820	2355	0	-	-	-	-	-	0.00	23.66
CA_2A-2A-29A-30A-66A	LTE B66	5	131997	1712.5	QPSK	1	12	66461	2112.5	0	LTE B2	20	900	1960	0	LTE B2	20	700	1940	0	LTE B29	10	9715	722.5	0	LTE B30	10	9820	2355	0	-	-	-	-	-	0.00	23.66
CA_2A-2A-29A-30A-66A	LTE B66	5	131997	1712.5	QPSK	1	12	66461	2112.5	0	LTE B2	20	900	1960	0	LTE B2	20	700	1940	0	LTE B29	10	9715	722.5	0	LTE B30	10	9820	2355	0	-	-	-	-	-	0.00	23.66
CA_2A-2A-29A-30A-66A	LTE B66	5	131997	1712.5	QPSK	1	12	66461	2112.5	0	LTE B2	20	900	1960	0	LTE B2	20	700	1940	0	LTE B29	10	9715	722.5	0	LTE B30	10	9820	2355	0	-	-	-	-	-	0.00	23.66
CA_2A-2A-29A-30A-66A	LTE B66	5	131997	1712.5	QPSK	1	12	66461	2112.5	0	LTE B2	20	900	1960	0	LTE B2	20	700	1940	0	LTE B29	10	9715	722.5	0	LTE B30	10	9820	2355	0	-	-	-	-	-	0.00	23.66
CA_2A-2A-29A-30A-66A	LTE B66	5	131997	1712.5	QPSK	1	12	66461	2112.5	0	LTE B2	20	900	1960	0	LTE B2	20	700	1940	0	LTE B29	10	9715	722.5	0	LTE B30	10	9820	2355	0	-	-	-	-	-	0.00	23.66
CA_2A-2A-29A-30A-66A	LTE B66	5	131997	1712.5	QPSK	1	12	66461	2112.5	0	LTE B2	20	900	1960	0	LTE B2	20	700	1940	0	LTE B29	10	9715	722.5	0	LTE B30	10	9820	2355	0	-	-	-	-	-	0.00	23.66
CA_2A-2A-29A-30A-66A	LTE B66	5	131997	1712.5	QPSK	1	12	66461	2112.5	0	LTE B2	20	900	1960	0	LTE B2	20	700	1940	0	LTE B29	10	9715	722.5	0	LTE B30	10	9820	2355	0	-	-	-	-	-	0.00	23.66
CA_2A-2A-29A-30A-66A	LTE B66	5	131997	1712.5	QPSK	1	12	66461	2112.5	0	LTE B2	20	900	1960	0	LTE B2	20	700	1940	0	LTE B29	10	9715	722.5	0	LTE B30	10	9820	2355	0	-	-	-	-	-	0.00	23.66
CA_2A-2A-29A-30A-66A	LTE B66	5	131997	1712.5	QPSK	1	12	66461	2112.5	0	LTE B2	20	900	1960	0	LTE B2	20	700	1940	0	LTE B29	10	9715	722.5	0	LTE B30	10	9820	2355	0	-	-	-	-	-	0.00	23.66
CA_2A-2A-29A-[66A]-66A	LTE B66	5	131997	1712.5	QPSK	1	12	66461	2112.5	4x4	LTE B66	20	67236	2190	2x2	LTE B2	20	900	1960	4x4	LTE B2	20	700	1940	4x4	LTE B29	10	9715	722.5	2x2	-	-	-	-	-	23.82	23.66
CA_2A-2A-29A-66A-[66A]	LTE B66	5	131997	1712.5	QPSK	1	12	66461	2112.5	2x2	LTE B66	20	67236	2190	4x4	LTE B2	20	900	1960	4x4	LTE B2	20	700	1940	4x4	LTE B29	10	9715	722.5	2x2	-	-	-	-	-	23.77	23.66
CA_2A-2A-29A-[66A]-[66A]	LTE B66	5	131997	1712.5	QPSK	1	12	66461	2112.5	0	LTE B66	20	67236	2190	0	LTE B2	20	900	1960	0	LTE B2	20	700	1940	0	LTE B29	10	9715	722.5	0	-	-	-	-	-	0.00	23.66
CA_[2A]-2A-29A-66A-66A	LTE B66	5	131997	1712.5	QPSK	1	12	66461	2112.5	0	LTE B66	20	67236	2190	0	LTE B2	20	900	1960	0	LTE B2	20	700	1940	0	LTE B29	10	9715	722.5	0	-	-	-	-	-	0.00	23.66
CA_[2A]-2A-29A-[66A]-66A	LTE B66	5	131997	1712.5	QPSK	1	12	66461	2112.5	4x4	LTE B66	20	67236	2190	2x2	LTE B2	20	900	1960	4x4	LTE B2	20	700	1940	4x4	LTE B29	10	9715	722.5	2x2	-	-	-	-	-	23.80	23.66
CA_[2A]-2A-29A-66A-[66A]	LTE B66	5	131997	1712.5	QPSK	1	12	66461	2112.5	2x2	LTE B66	20	67236	2190	4x4	LTE B2	20	900	1960	4x4	LTE B2	20	700	1940	4x4	LTE B29	10	9715	722.5	2x2	-	-	-	-	-	23.76	23.66
CA_[2A]-2A-29A-[66A]-[66A]	LTE B66	5	131997	1712.5	QPSK	1	12	66461	2112.5	0	LTE B66	20	67236	2190	0	LTE B2	20	900	1960	0	LTE B2	20	700	1940	0	LTE B29	10	9715	722.5	0	-	-	-	-	-	0.00	23.66
CA_[2A]-[2A]-29A-66A-66A	LTE B66	5	131997	1712.5	QPSK	1	12	66461	2112.5	0	LTE B66	20	67236	2190	0	LTE B2	20	900	1960	0	LTE B2	20	700	1940	0	LTE B29	10	9715	722.5	0	-	-	-	-	-	0.00	23.66
CA_[2A]-[2A]-29A-[66A]-66A	LTE B66	5	131997	1712.5	QPSK	1	12	66461	2112.5	4x4	LTE B66	20	67236	2190	2x2	LTE B2	20	900	1960	4x4	LTE B2	20	700	1940	4x4	LTE B29	10	9715	722.5	2x2	-	-	-	-	-	23.81	23.66
CA_[2A]-[2A]-29A-66A-[66A]	LTE B66	5	131997	1712.5	QPSK	1	12	66461	2112.5	2x2	LTE B66	20	67236	2190	4x4	LTE B2	20	900	1960	4x4	LTE B2	20	700	1940	4x4	LTE B29	10	9715	722.5	2x2	-	-	-	-	-	23.71	23.66
CA_[2A]-[2A]-29A-[66A]-[66A]	LTE B66	5	131997	1712.5	QPSK	1	12	66461	2112.5	4x4	LTE B66	20	67236	2190	2x2	LTE B2	20	900	1960	4x4	LTE B2	20	700	1940	4x4	LTE B29	10	9715	722.5	2x2	-	-	-	-	-	23.78	23.66
CA_2A-5A-30A-66A-[66A]	LTE B66	5	131997	1712.5	QPSK	1	12	66461	2112.5	2x2	LTE B66	20	67236	2190	4x4	LTE B2	20	900	1960	2x2	LTE B5	10	2525	881.5	2x2	LTE B30	10	9820	2355	2x2	-	-	-	-	-	23.74	23.66
CA_2A-5A-30A-[66A]-66A	LTE B66	5	131997	1712.5	QPSK	1	12	66461	2112.5	4x4	LTE B66	20	67236	2190	2x2	LTE B2	20	900	1960	2x2	LTE B5	10	2525	881.5	2x2	LTE B30	10	9820	2355	2x2	-	-	-	-	-	23.70	23.66
CA_2A-5A-30A-[66A]-[66A]	LTE B66	5	131997	1712.5	QPSK	1	12	66461	2112.5	4x4	LTE B66	20	67236	2190	4x4	LTE B2	20	900	1960	2x2	LTE B5	10	2525	881.5	2x2	LTE B30	10	9820	2355	2x2	-	-	-	-	-	23.69	23.66
CA_2A-5A-[30A]-66A-66A	LTE B66	5	131997	1712.5	QPSK	1	12	66461	2112.5	2x2	LTE B66	20	67236	2190	2x2	LTE B2	20	900	1960	2x2	LTE B5	10	2525	881.5	2x2	LTE B30	10	9820	2355	4x4	-	-	-	-	-	23.69	23.66
CA_2A-5A-[30A]-66A-[66A]	LTE B66	5	131997	1712.5	QPSK	1	12	66461	2112.5	2x2	LTE B66	20	67236	2190	4x4	LTE B2	20	900	1960	2x2	LTE B5	10	2525	881.5	2x2	LTE B30	10	9820	2355	4x4	-	-	-	-	-	23.68	23.66
CA_2A-5A-[30A]-[66A]-66A	LTE B66	5	131997	1712.5	QPSK	1	12	66461	2112.5	4x4	LTE B66	20	67236	2190	2x2	LTE B2	20	900	1960	2x2	LTE B5	10	2525	881.5	2x2	LTE B30	10	9820	2355	4x4	-	-	-	-	-	23.63	23.66
CA_2A-5A-[30A]-[66A]-[66A]	LTE B66	5	131997	1712.5	QPSK	1	12	66461	2112.5	4x4	LTE B66	20	67236	2190	4x4	LTE B2	20	900	1960	2x2	LTE B5	10	2525	881.5	2x2	LTE B30	10	9820	2355	4x4	-	-	-	-	-	23.68	23.66
CA_[2A]-5A-30A-66A-66A	LTE B66	5	131997	1712.5	QPSK	1	12	66461	2112.5	2x2	LTE B66	20	67236	2190	2x2	LTE B2	20	900	1960	4x4	LTE B5	10	2525	881.5	2x2	LTE B30	10	9820	2355	2x2	-	-	-	-	-	23.72	23.66
CA_[2A]-5A-30A-66A-[66A]	LTE B66	5	131997	1712.5	QPSK	1	12	66461	2112.5	2x2	LTE B66	20	67236	2190	4x4	LTE B2	20	900	1960	4x4	LTE B5	10	2525	881.5	2x2	LTE B30	10	9820	2355	2x2	-	-	-	-	-	23.73	23.66
CA_[2A]-5A-30A-[66A]-66A	LTE B66	5	131997	1712.5	QPSK	1	12	66461	2112.5	4x4	LTE B66	20	67236	2190	2x2	LTE B2	20	900	1960	4x4	LTE B5	10	2525	881.5	2x2	LTE B30	10	9820	2355	2x2	-	-	-	-	-	23.67	23.66
CA_[2A]-5A-30A-[66A]-[66A]	LTE B66	5	131997	1712.5	QPSK	1	12	66461	2112.5	4x4	LTE B66	20	67236	2190	4x4	LTE B2	20	900	1960	4x4	LTE B5	10	2525	881.5	2x2	LTE B30	10	9820	2355	2x2	-	-	-	-	-	23.70	23.66
CA_[2A]-5A-[30A]-66A-66A	LTE B66	5	131997	1712.5	QPSK	1	12	66461	2112.5	2x2	LTE B66	20	67236	2190	2x2	LTE B2	20	900	1960	4x4	LTE B5	10	2525	881.5	2x2	LTE B30	10	9820	2355	4x4	-	-	-	-	-	23.77	23.66
CA_[2A]-5A-[30A]-[66A]-66A	LTE B66	5	131997	1712.5	QPSK	1	12	66461	2112.5	4x4	LTE B66	20	67236	2190	2x2	LTE B2	20	900	1960	4x4	LTE B5	10	2525	881.5	2x2	LTE B30	10	9820	2355	4x4	-	-	-	-	-	23.78	23.66
CA_[2A]-5A-[30A]-66A-[66A]	LTE B66	5	131997	1712.5	QPSK	1	12	66461	2112.5	2x2	LTE B66	20	67236	2190	4x4	LTE B2	20	900	1960	4x4	LTE B5	10	2525	881.5	2x2	LTE B30	10	9820	2355	4x4	-	-	-	-	-	23.78	23.66
CA_[2A]-5A-[30A]-[66A]-[66A]	LTE B66	5	131997	1712.5	QPSK	1	12	66461	2112.5	4x4	LTE B66	20	67236	2190	4x4	LTE B2	20	900	1960	4x4	LTE B5	10	2525	881.5	2x2	LTE B30	10	9820	2355	4x4	-	-	-	-	-	23.76	23.66
CA_2A-5A-48A-[66A]-66A	LTE B66	5	131997	1712.5	QPSK	1	12	66461	2112.5	4x4	LTE B66	20	67236	2190	2x2	LTE B2	20	900	1960	2x2	LTE B5	10	2525	881.5	2x2	LTE B48	20	55990	3625	2x2	-	-	-	-	-	23.62	23.66
CA_2A-5A-48A-66A-[66A]	LTE B66	5	131997	1712.5	QPSK	1	12	66461	2112.5	2x2	LTE B66	20	67236	2190	4x4	LTE B2	20	900	1960	2x2	LTE B5	10	2525	881.5	2x2	LTE B48	20	55990	3625	2x2	-	-	-	-	-	23.69	23.66
CA_2A-5A-48A-[66A]-[66A]	LTE B66	5	131997	1712.5	QPSK	1	12	66461	2112.5	4x4	LTE B66	20	67236	2190	4x4	LTE B2	20	900	1960	2x2	LTE B5	10	2525	881.5	2x2	LTE B48	20	55990	3625	2x2	-	-	-	-	-	23.76	23.66
CA_2A-5A-[48A]-66A-66A	LTE B66	5	131997	1712.5	QPSK	1	12	66461	2112.5	2x2	LTE B66	20	67236	2190	2x2	LTE B2	20	900	1960	2x2	LTE B5	10	2525	881.5	2x2	LTE B48	20	55990	3625	4x4	-	-	-	-	-	23.70	23.66
CA_2A-5A-[48A]-[66A]-66A	LTE B66	5	131997	1712.5	QPSK	1	12	66461	2112.5	4x4	LTE B66	20	67236	2190	2x2	LTE B2	20	900	1960	2x2	LTE B5	10	2525	881.5	2x2	LTE B48	20	55990	3625	4x4	-	-	-	-	-	23.72	23.66
CA_2A-5A-[48A]-66A-[66A]	LTE B66	5	131997	1712.5	QPSK	1	12	66461	2112.5	2x2	LTE B66	20	67236	2190	4x4	LTE B2	20	900	1960	2x2	LTE B5	10	2525	881.5	2x2	LTE B48	20	55990	3625	4x4	-	-	-	-	-	23.68	23.66
CA_2A-5A-[48A]-[66A]-[66A]	LTE B66	5	131997	1712.5	QPSK	1	12	66461	2112.5	4x4	LTE B66	20	67236	2190	4x4	LTE B2	20	900	1960	2x2	LTE B5	10	2525	881.5	2x2	LTE B48	20	55990	3625	4x4	-	-	-	-	-	23.71	23.66
CA_[2A]-5A-48A-66A-66A	LTE B66	5	131997	1712.5	QPSK	1	12	66461	2112.5	2x2	LTE B66	20	67236	2190	2x2	LTE B2	20	900	1960	4x4	LTE B5	10	2525	881.5	2x2	LTE B48	20	55990	3625	2x2	-	-	-	-	-	23.72	23.66
CA_[2A]-5A-48A-[66A]-66A	LTE B66	5	131997	1712.5	QPSK	1	12	66461	2112.5	4x4	LTE B66	20	67236	2190	2x2	LTE B2	20	900	1960	4x4	LTE B5	10	2525	881.5	2x2	LTE B48	20	55990	3625	2x2	-	-	-	-	-	23.68	23.66
CA_[2A]-5A-48A-66A-[66A]	LTE B66	5	131997	1712.5	QPSK	1	12	66461	2112.5	2x2	LTE B66	20	67236	2190	4x4	LTE B2	20	900	1960	4x4	LTE B5	10	2525	881.5	2x2	LTE B48	20	55990	3625	2x2	-	-	-	-	-	23.71	23.66
CA_[2A]-5A-48A-[66A]-[66A]	LTE B66	5	131997	1712.5	QPSK	1	12	66461	2112.5	4x4	LTE B66	20	67236	2190	4x4	LTE B2	20	900	1960	4x4	LTE B5	10	2525	881.5	2x2	LTE B48	20	55990	3625	2x2	-	-	-	-	-	23.69	23.66
CA_[2A]-5A-[48A]-66A-66A	LTE B66	5	131997	1712.5	QPSK	1	12	66461	2112.5	2x2	LTE B66	20	67236	2190	2x2	LTE B2	20	900	1960	4x4	LTE B5	10	2525	881.5	2x2	LTE B48	20	55990	3625	4x4	-	-	-	-	-	23.70	23.66
CA_[2A]-5A-[48A]-[66A]-66A	LTE B66	5	131997	1712.5	QPSK	1	12	66461	2112.5	4x4	LTE B66	20	67236	2190	2x2	LTE B2	20	900	1960	4x4	LTE B5	10	2525	881.5	2x2	LTE B48	20	55990	3625	4x4	-	-	-	-	-	23.65	23.66
CA_[2A]-5A-[48A]-66A-[66A]	LTE B66	5	131997	1712.5	QPSK	1	12	66461	2112.5	2x2	LTE B66	20	67236	2190	4x4	LTE B2	20	900	1960	4x4	LTE B5	10	2525	881.5	2x2	LTE B48	20	55990	3625	4x4	-	-	-	-	-	23.72	23.66
CA_[2A]-5A-[48A]-[66A]-[66A]	LTE B66	5	131997	1712.5	QPSK	1	12	66461	2112.5	4x4	LTE B66	20	67236	2190	4x4	LTE B2	20	900	1960	4x4	LTE B5	10	2525	881.5	2x2	LTE B48	20	55990	3625	4x4	-	-	-	-	-	23.64	23.66
CA_2A-5A-48C-[66A]	LTE B66	5	131997	1712.5	QPSK	1	12	66461	2112.5	4x4	LTE B2	20	900	1960	2x2	LTE B5	10	2525	881.5	2x2	LTE B48	20	55990	3625	2x2	LTE B48	20	56188	3644.8	2x2	-	-	-	-	-	23.64	23.66
CA_2A-5A-[48C]-66A	LTE B66	5	131997	1712.5	QPSK	1	12	66461	2112.5	2x2	LTE B2	20	900	1960	2x2	LTE B5	10	2525	881.5	2x2	LTE B48	20	55990	3625	4x4	LTE B48	20	56188	3644.8	4x4	-	-	-	-	-	23.67	23.66
CA_2A-5A-[48C]-[66A]	LTE B66	5	131997	1712.5	QPSK	1	12	66461	2112.5	4x4	LTE B2	20	900	1960	2x2	LTE B5	10	2525	881.5	2x2	LTE B48	20	55990	3625	4x4	LTE B48	20	56188	3644.8	4x4	-	-	-	-	-	23.76	23.66
CA_[2A]-5A-48C-66A	LTE B66	5	131997	1712.5	QPSK	1	12	66461	2112.5	2x2	LTE B2	20	900	1960	4x4	LTE B5	10	2525	881.5	2x2	LTE B48	20	55990	3625	2x2	LTE B48	20	56188	3644.8	2x2	-	-	-	-	-	23.74	23.66
CA_[2A]-5A-48C-[66A]	LTE B66	5	131997	1712.5	QPSK	1	12	66461	2112.5	4x4	LTE B2	20	900	1960	4x4	LTE B5	10	2525	881.5	2x2	LTE B48	20	55990	3625	2x2	LTE B48	20	56188	3644.8	2x2	-	-	-	-	-	23.73	23.66
CA_[2A]-5A-[48C]-66A	LTE B66	5	131997	1712.5	QPSK	1	12	66461	2112.5	2x2	LTE B2	20	900	1960	4x4	LTE B5	10	2525	881.5	2x2	LTE B48	20	55990	3625	4x4	LTE B48	20	56188	3644.8	4x4	-	-	-	-	-	23.67	23.66
CA_[2A]-5A-[48C]-[66A]	LTE B66	5	131997	1712.5	QPSK	1	12	66461	2112.5	4x4	LTE B2	20	900	1960	4x4	LTE B5	10	2525	881.5	2x2	LTE B48	20	55990	3625	4x4	LTE B48	20	56188	3644.8	4x4	-	-	-	-	-	23.76	23.66
CA_2A-12A-30A-66A-[66A]	LTE B66	5	131997	1712.5	QPSK	1	12	66461	2112.5	2x2	LTE B66	20	67236	2190	4x4	LTE B2	20	900	1960	2x2	LTE B12	10	5095	737.5	2x2	LTE B30	10	9820	2355	2x2	-	-	-	-	-	23.66	23.66
CA_2A-12A-30A-[66A]-66A	LTE B66	5	131997	1712.5	QPSK	1	12	66461	2112.5	4x4	LTE B66	20	67236	2190	2x2	LTE B2	20	900	1960	2x2	LTE B12	10	5095	737.5	2x2	LTE B30	10	9820	2355	2x2	-	-	-	-	-	23.69	23.66
CA_2A-12A-30A-[66A]-[66A]	LTE B66	5	131997	1712.5	QPSK	1	12	66461	2112.5	4x4	LTE B66	20	67236	2190	4x4	LTE B2	20	900	1960	2x2	LTE B12	10	5095	737.5	2x2	LTE B30	10	9820	2355	2x2	-	-	-	-	-	23.70	23.66
CA_2A-12A-[30A]-66A-66A	LTE B66	5	131997	1712.5	QPSK	1	12	66461	2112.5	2x2	LTE B66	20	67236	2190	2x2	LTE B2	20	900	1960	2x2	LTE B12	10	5095	737.5	2x2	LTE B30	10	9820	2355	4x4	-	-	-	-	-	23.72	23.66
CA_2A-12A-[30A]-66A-[66A]	LTE B66	5	131997	1712.5	QPSK	1	12	66461	2112.5	2x2	LTE B66	20	67236	2190	4x4	LTE B2	20	900	1960	2x2	LTE B12	10	5095	737.5	2x2	LTE B30	10	9820	2355	4x4	-	-	-	-	-	23.72	23.66
CA_2A-12A-[30A]-[66A]-66A	LTE B66	5	131997	1712.5	QPSK	1	12	66461	2112.5	4x4	LTE B66	20	67236	2190	2x2	LTE B2	20	900	1960	2x2	LTE B12	10	5095	737.5	2x2	LTE B30	10	9820	2355	4x4	-	-	-	-	-	23.71	23.66
CA_2A-12A-[30A]-[66A]-[66A]	LTE B66	5	131997	1712.5	QPSK	1	12	66461	2112.5	4x4	LTE B66	20	67236	2190	4x4	LTE B2	20	900	1960	2x2	LTE B12	10	5095	737.5	2x2	LTE B30	10	9820	2355	4x4	-	-	-	-	-	23.71	23.66
CA_[2A]-12A-30A-66A-66A	LTE B66	5	131997	1712.5	QPSK	1	12	66461	2112.5	2x2	LTE B66	20	67236	2190	2x2	LTE B2	20	900	1960	4x4	LTE B12	10	5095	737.5	2x2	LTE B30	10	9820	2355	2x2	-	-	-	-	-	23.73	23.66
CA_[2A]-12A-30A-66A-[66A]	LTE B66	5	131997	1712.5	QPSK	1	12	66461	2112.5	2x2	LTE B66	20	67236	2190	4x4	LTE B2	20	900	1960	4x4	LTE B12	10	5095	737.5	2x2	LTE B30	10	9820	2355	2x2	-	-	-	-	-	23.75	23.66
CA_[2A]-12A-30A-[66A]-66A	LTE B66	5	131997	1712.5	QPSK	1	12	66461	2112.5	4x4	LTE B66	20	67236	2190	2x2	LTE B2	20	900	1960	4x4	LTE B12	10	5095	737.5	2x2	LTE B30	10	9820	2355	2x2	-	-	-	-	-	23.67	23.66
CA_[2A]-12A-30A-[66A]-[66A]	LTE B66	5	131997	1712.5	QPSK	1	12	66461	2112.5	4x4	LTE B66	20	67236	2190	4x4	LTE B2	20	900	1960	4x4	LTE B12	10	5095	737.5	2x2	LTE B30	10	9820	2355	2x2	-	-	-	-	-	23.69	23.66
CA_[2A]-12A-[30A]-66A-66A	LTE B66	5	131997	1712.5	QPSK	1	12	66461	2112.5	2x2	LTE B66	20	67236	2190	2x2	LTE B2	20	900	1960	4x4	LTE B12	10	5095	737.5	2x2	LTE B30	10	9820	2355	4x4	-	-	-	-	-	23.71	23.66
CA_[2A]-12A-[30A]-[66A]-66A	LTE B66	5	131997	1712.5	QPSK	1	12	66461	2112.5	4x4	LTE B66	20	67236	2190	2x2	LTE B2	20	900	1960	4x4	LTE B12	10	5095	737.5	2x2	LTE B30	10	9820	2355	4x4	-	-	-	-	-	23.70	23.66
CA_[2A]-12A-[30A]-66A-[66A]	LTE B66	5	131997	1712.5	QPSK	1	12	66461	2112.5	2x2	LTE B66	20	67236	2190	4x4	LTE B2	20	900	1960	4x4	LTE B12	10	5095	737.5	2x2	LTE B30	10	9820	2355	4x4	-	-	-	-	-	23.69	23.66
CA_[2A]-12A-[30A]-[66A]-[66A]	LTE B66	5	131997	1712.5	QPSK	1	12	66461	2112.5	4x4	LTE B66	20	67236	2190	4x4	LTE B2	20	900	1960	4x4	LTE B12	10	5095	737.5	2x2	LTE B30	10	9820	2355	4x4	-	-	-	-	-	23.66	23.66
CA_2A-12B-[66A]-66A	LTE B66	5	131997	1712.5	QPSK	1	12	66461	2112.5	4x4	LTE B66	20	67236	2190	2x2	LTE B2	20	900	1960	2x2	LTE B12	5	5095	737.5	2x2	LTE B12	5	5047	732.7	2x2	-	-	-	-	-	23.75	23.66
CA_2A-12B-66A-[66A]	LTE B66	5	131997	1712.5	QPSK	1	12	66461	2112.5	2x2	LTE B66	20	67236	2190	4x4	LTE B2	20	900	1960	2x2	LTE B12	5	5095	737.5	2x2	LTE B12	5	5047	732.7	2x2	-	-	-	-	-	23.69	23.66
CA_2A-12B-[66A]-[66A]	LTE B66	5	131997	1712.5	QPSK	1	12	66461	2112.5	4x4	LTE B66	20	67236	2190	4x4	LTE B2	20	900	1960	2x2	LTE B12	5	5095	737.5	2x2	LTE B12	5	5047	732.7	2x2	-	-	-	-	-	23.76	23.66
CA_[2A]-12B-66A-66A	LTE B66	5	131997	1712.5	QPSK	1	12	66461	2112.5	2x2	LTE B66	20	67236	2190	2x2	LTE B2	20	900	1960	4x4	LTE B12	5	5095	737.5	2x2	LTE B12	5	5047	732.7	2x2	-	-	-	-	-	23.71	23.66
CA_[2A]-12B-[66A]-66A	LTE B66	5	131997	1712.5	QPSK	1	12	66461	2112.5	4x4	LTE B66	20	67236	2190	2x2	LTE B2	20	900	1960	4x4	LTE B12	5	5095	737.5	2x2	LTE B12	5	5047	732.7	2x2	-	-	-	-	-	23.77	23.66
CA_[2A]-12B-66A-[66A]	LTE B66	5	131997	1712.5	QPSK	1	12	66461	2112.5	2x2	LTE B66	20	67236	2190	4x4	LTE B2	20	900	1960	4x4	LTE B12	5	5095	737.5	2x2	LTE B12	5	5047	732.7	2x2	-	-	-	-	-	23.62	23.66
CA_[2A]-12B-[66A]-[66A]	LTE B66	5	131997	1712.5	QPSK	1	12	66461	2112.5	4x4	LTE B66	20	67236	2190	4x4	LTE B2	20	900	1960	4x4	LTE B12	5	5095	737.5	2x2	LTE B12	5	5047	732.7	2x2	-	-	-	-	-	23.73	23.66
CA_2A-13A-48C-[66A]	LTE B66	5	131997	1712.5	QPSK	1	12	66461	2112.5	4x4	LTE B2	20	900	1960	2x2	LTE B13	10	5230	751	2x2	LTE B48	20	55990	3625	2x2	LTE B48	20	56188	3644.8	2x2	-	-	-	-	-	23.75	23.66
CA_2A-13A-[48C]-66A	LTE B66	5	131997	1712.5	QPSK	1	12	66461	2112.5	2x2	LTE B2	20	900	1960	2x2	LTE B13	10	5230	751	2x2	LTE B48	20	55990	3625	4x4	LTE B48	20	56188	3644.8	4x4	-	-	-	-	-	23.61	23.66
CA_2A-13A-[48C]-[66A]	LTE B66	5	131997	1712.5	QPSK	1	12	66461	2112.5	4x4	LTE B2	20	900	1960	2x2	LTE B13	10	5230	751	2x2	LTE B48	20	55990	3625	4x4	LTE B48	20	56188	3644.8	4x4	-	-	-	-	-	23.77	23.66
CA_[2A]-13A-48C-66A	LTE B66	5	131997	1712.5	QPSK	1	12	66461	2112.5	2x2	LTE B2	20	900	1960	4x4	LTE B13	10	5230	751	2x2	LTE B48	20	55990	3625	2x2	LTE B48	20	56188	3644.8	2x2	-	-	-	-	-	23.68	23.66
CA_[2A]-13A-48C-[66A]	LTE B66	5	131997	1712.5	QPSK	1	12	66461	2112.5	4x4	LTE B2	20	900	1960	4x4	LTE B13	10	5230	751	2x2	LTE B48	20	55990	3625	2x2	LTE B48	20	56188	3644.8	2x2	-	-	-	-	-	23.76	23.66
CA_[2A]-13A-[48C]-66A	LTE B66	5	131997	1712.5	QPSK	1	12	66461	2112.5	2x2	LTE B2	20	900	1960	4x4	LTE B13	10	5230	751	2x2	LTE B48	20	55990	3625	4x4	LTE B48	20	56188	3644.8	4x4	-	-	-	-	-	23.73	23.66
CA_[2A]-13A-[48C]-[66A]	LTE B66	5	131997	1712.5	QPSK	1	12	66461	2112.5	4x4	LTE B2	20	900	1960	4x4	LTE B13	10	5230	751	2x2	LTE B48	20	55990	3625	4x4	LTE B48	20	56188	3644.8	4x4	-	-	-	-	-	23.68	23.66
CA_2A-14A-30A-66A-[66A]	LTE B66	5	131997	1712.5	QPSK	1	12	66461	2112.5	2x2	LTE B66	20	67236	2190	4x4	LTE B2	20	900	1960	2x2	LTE B14	10	5330	763	2x2	LTE B30	10	9820	2355	2x2	-	-	-	-	-	23.71	23.66
CA_2A-14A-30A-[66A]-66A	LTE B66	5	131997	1712.5	QPSK	1	12	66461	2112.5	4x4	LTE B66	20	67236	2190	2x2	LTE B2	20	900	1960	2x2	LTE B14	10	5330	763	2x2	LTE B30	10	9820	2355	2x2	-	-	-	-	-	23.73	23.66
CA_2A-14A-30A-[66A]-[66A]	LTE B66	5	131997	1712.5	QPSK	1	12	66461	2112.5	4x4	LTE B66	20	67236	2190	4x4	LTE B2	20	900	1960	2x2	LTE B14	10	5330	763	2x2	LTE B30	10	9820	2355	2x2	-	-	-	-	-	23.74	23.66
CA_2A-14A-[30A]-66A-66A	LTE B66	5	131997	1712.5	QPSK	1	12	66461	2112.5	2x2	LTE B66	20	67236	2190	2x2	LTE B2	20	900	1960	2x2	LTE B14	10	5330	763	2x2	LTE B30	10	9820	2355	4x4	-	-	-	-	-	23.72	23.66
CA_2A-14A-[30A]-66A-[66A]	LTE B66	5	131997	1712.5	QPSK	1	12	66461	2112.5	2x2	LTE B66	20	67236	2190	4x4	LTE B2	20	900	1960	2x2	LTE B14	10	5330	763	2x2	LTE B30	10	9820	2355	4x4	-	-	-	-	-	23.77	23.66
CA_2A-14A-[30A]-[66A]-66A	LTE B66	5	131997	1712.5	QPSK	1	12	66461	2112.5	4x4	LTE B66	20	67236	2190	2x2	LTE B2	20	900	1960	2x2	LTE B14	10	5330	763	2x2	LTE B30	10	9820	2355	4x4	-	-	-	-	-	23.69	23.66
CA_2A-14A-[30A]-[66A]-[66A]	LTE B66	5	131997	1712.5	QPSK	1	12	66461	2112.5	4x4	LTE B66	20	67236	2190	4x4	LTE B2	20	900	1960	2x2	LTE B14	10	5330	763	2x2	LTE B30	10	9820	2355	4x4	-	-	-	-	-	23.71	23.66
CA_[2A]-14A-30A-66A-66A	LTE B66	5	131997	1712.5	QPSK	1	12	66461	2112.5	2x2	LTE B66	20	67236	2190	2x2	LTE B2	20	900	1960	4x4	LTE B14	10	5330	763	2x2	LTE B30	10	9820	2355	2x2	-	-	-	-	-	23.79	23.66
CA_[2A]-14A-30A-66A-[66A]	LTE B66	5	131997	1712.5	QPSK	1	12	66461	2112.5	2x2	LTE B66	20	67236	2190	4x4	LTE B2	20	900	1960	4x4	LTE B14	10	5330	763	2x2	LTE B30	10	9820	2355	2x2	-	-	-	-	-	23.71	23.66
CA_[2A]-14A-30A-[66A]-66A	LTE B66	5	131997	1712.5	QPSK	1	12	66461	2112.5	4x4	LTE B66	20	67236	2190	2x2	LTE B2	20	900	1960	4x4	LTE B14	10	5330	763	2x2	LTE B30	10	9820	2355	2x2	-	-	-	-	-	23.73	23.66
CA_[2A]-14A-30A-[66A]-[66A]	LTE B66	5	131997	1712.5	QPSK	1	12	66461	2112.5	4x4	LTE B66	20	67236	2190	4x4	LTE B2	20	900	1960	4x4	LTE B14	10	5330	763	2x2	LTE B30	10	9820	2355	2x2	-	-	-	-	-	23.71	23.66
CA_[2A]-14A-[30A]-66A-66A	LTE B66	5	131997	1712.5	QPSK	1	12	66461	2112.5	2x2	LTE B66	20	67236	2190	2x2	LTE B2	20	900	1960	4x4	LTE B14	10	5330	763	2x2	LTE B30	10	9820	2355	4x4	-	-	-	-	-	23.73	23.66
CA_[2A]-14A-[30A]-[66A]-66A	LTE B66	5	131997	1712.5	QPSK	1	12	66461	2112.5	4x4	LTE B66	20	67236	2190	2x2	LTE B2	20	900	1960	4x4	LTE B14	10	5330	763	2x2	LTE B30	10	9820	2355	4x4	-	-	-	-	-	23.74	23.66
CA_[2A]-14A-[30A]-66A-[66A]	LTE B66	5	131997	1712.5	QPSK	1	12	66461	2112.5	2x2	LTE B66	20	67236	2190	4x4	LTE B2	20	900	1960	4x4	LTE B14	10	5330	763	2x2	LTE B30	10	9820	2355	4x4	-	-	-	-	-	23.75	23.66
CA_[2A]-14A-[30A]-[66A]-[66A]	LTE B66	5	131997	1712.5	QPSK	1	12	66461	2112.5	4x4	LTE B66	20	67236	2190	4x4	LTE B2	20	900	1960	4x4	LTE B14	10	5330	763	2x2	LTE B30	10	9820	2355	4x4	-	-	-	-	-	23.75	23.66
CA_2A-48A-48C-[66A]	LTE B66	5	131997	1712.5	QPSK	1	12	66461	2112.5	4x4	LTE B2	20	900	1960	2x2	LTE B48	20	55990	3625	2x2	LTE B48	20	56640	3690	2x2	LTE B48	20	56442	3670.2	2x2	-	-	-	-	-	23.60	23.66
CA_2A-48A-[48C]-66A	LTE B66	5	131997	1712.5	QPSK	1	12	66461	2112.5	2x2	LTE B2	20	900	1960	2x2	LTE B48	20	55990	3625	2x2	LTE B48	20	56640	3690	4x4	LTE B48	20	56442	3670.2	4x4	-	-	-	-	-	23.73	23.66
CA_2A-48A-[48C]-[66A]	LTE B66	5	131997	1712.5	QPSK	1	12	66461	2112.5	4x4	LTE B2	20	900	1960	2x2	LTE B48	20	55990	3625	2x2	LTE B48	20	56640	3690	4x4	LTE B48	20	56442	3670.2	4x4	-	-	-	-	-	23.64	23.66
CA_2A-[48A]-48C-66A	LTE B66	5	131997	1712.5	QPSK	1	12	66461	2112.5	2x2	LTE B2	20	900	1960	2x2	LTE B48	20	55990	3625	4x4	LTE B48	20	56640	3690	2x2	LTE B48	20	56442	3670.2	2x2	-	-	-	-	-	23.70	23.66
CA_2A-[48A]-48C-[66A]	LTE B66	5	131997	1712.5	QPSK	1	12	66461	2112.5	4x4	LTE B2	20	900	1960	2x2	LTE B48	20	55990	3625	4x4	LTE B48	20	56640	3690	2x2	LTE B48	20	56442	3670.2	2x2	-	-	-	-	-	23.65	23.66
CA_2A-[48A]-[48C]-66A	LTE B66	5	131997	1712.5	QPSK	1	12	66461	2112.5	2x2	LTE B2	20	900	1960	2x2	LTE B48	20	55990	3625	4x4	LTE B48	20	56640	3690	4x4	LTE B48	20	56442	3670.2	4x4	-	-	-	-	-	23.64	23.66
CA_2A-[48A]-[48C]-[66A]	LTE B66	5	131997	1712.5	QPSK	1	12	66461	2112.5	4x4	LTE B2	20	900	1960	2x2	LTE B48	20	55990	3625	4x4	LTE B48	20	56640	3690	4x4	LTE B48	20	56442	3670.2	4x4	-	-	-	-	-	23.67	23.66
CA_[2A]-48A-48C-66A	LTE B66	5	131997	1712.5	QPSK	1	12	66461	2112.5	2x2	LTE B2	20	900	1960	4x4	LTE B48	20	55990	3625	2x2	LTE B48	20	56640	3690	2x2	LTE B48	20	56442	3670.2	2x2	-	-	-	-	-	23.63	23.66
CA_[2A]-48A-48C-[66A]	LTE B66	5	131997	1712.5	QPSK	1	12	66461	2112.5	4x4	LTE B2	20	900	1960	4x4	LTE B48	20	55990	3625	2x2	LTE B48	20	56640	3690	2x2	LTE B48	20	56442	3670.2	2x2	-	-	-	-	-	23.65	23.66
CA_[2A]-48A-[48C]-66A	LTE B66	5	131997	1712.5	QPSK	1	12	66461	2112.5	2x2	LTE B2	20	900	1960	4x4	LTE B48	20	55990	3625	2x2	LTE B48	20	56640	3690	4x4	LTE B48	20	56442	3670.2	4x4	-	-	-	-	-	23.76	23.66
CA_[2A]-48A-[48C]-[66A]	LTE B66	5	131997	1712.5	QPSK	1	12	66461	2112.5	4x4	LTE B2	20	900	1960	4x4	LTE B48	20	55990	3625	2x2	LTE B48	20	56640	3690	4x4	LTE B48	20	56442	3670.2	4x4	-	-	-	-	-	23.66	23.66
CA_[2A]-[48A]-48C-66A	LTE B66	5	131997	1712.5	QPSK	1	12	66461	2112.5	2x2	LTE B2	20	900	1960	4x4	LTE B48	20	55990	3625	4x4	LTE B48	20	56640	3690	2x2	LTE B48	20	56442	3670.2	2x2	-	-	-	-	-	23.72	23.66
CA_[2A]-[48A]-48C-[66A]	LTE B66	5	131997	1712.5	QPSK	1	12	66461	2112.5	4x4	LTE B2	20	900	1960	4x4	LTE B48	20	55990	3625	4x4	LTE B48	20	56640	3690	2x2	LTE B48	20	56442	3670.2	2x2	-	-	-	-	-	23.67	23.66
CA_[2A]-[48A]-[48C]-66A	LTE B66	5	131997	1712.5	QPSK	1	12	66461	2112.5	2x2	LTE B2	20	900	1960	4x4	LTE B48	20	55990	3625	4x4	LTE B48	20	56640	3690	4x4	LTE B48	20	56442	3670.2	4x4	-	-	-	-	-	23.68	23.66
CA_[2A]-[48A]-[48C]-[66A]	LTE B66	5	131997	1712.5	QPSK	1	12	66461	2112.5	4x4	LTE B2	20	900	1960	4x4	LTE B48	20	55990	3625	4x4	LTE B48	20	56640	3690	4x4	LTE B48	20	56442	3670.2	4x4	-	-	-	-	-	23.76	23.66
CA_[2A]-[48C]-[66A]-[66A]	LTE B66	5	131997	1712.5	QPSK	1	12	66461	2112.5	4x4	LTE B66	20	67236	2190	4x4	LTE B2	20	900	1960	4x4	LTE B48	20	55990	3625	4x4	LTE B48	20	56188	3644.8	4x4	-	-	-	-	-	23.77	23.66
CA_2A-48D-[66A]	LTE B66	5	131997	1712.5	QPSK	1	12	66461	2112.5	4x4	LTE B2	20	900	1960	2x2	LTE B48	20	55990	3625	2x2	LTE B48	20	56188	3644.8	2x2	LTE B48	20	56386	3664.6	2x2	-	-	-	-	-	23.75	23.66
CA_2A-[48D]-66A	LTE B66	5	131997	1712.5	QPSK	1	12	66461	2112.5	2x2	LTE B2	20	900	1960	2x2	LTE B48	20	55990	3625	4x4	LTE B48	20	56188	3644.8	4x4	LTE B48	20	56386	3664.6	4x4	-	-	-	-	-	23.70	23.66
CA_2A-[48D]-[66A]	LTE B66	5	131997	1712.5	QPSK	1	12	66461	2112.5	4x4	LTE B2	20	900	1960	2x2	LTE B48	20	55990	3625	4x4	LTE B48	20	56188	3644.8	4x4	LTE B48	20	56386	3664.6	4x4	-	-	-	-	-	23.77	23.66
CA_[2A]-48D-66A	LTE B66	5	131997	1712.5	QPSK	1	12	66461	2112.5	2x2	LTE B2	20	900	1960	4x4	LTE B48	20	55990	3625	2x2	LTE B48	20	56188	3644.8	2x2	LTE B48	20	56386	3664.6	2x2	-	-	-	-	-	23.71	23.66
CA_[2A]-48D-[66A]	LTE B66	5	131997	1712.5	QPSK	1	12	66461	2112.5	4x4	LTE B2	20	900	1960	4x4	LTE B48	20	55990	3625	2x2	LTE B48	20	56188	3644.8	2x2	LTE B48	20	56386	3664.6	2x2	-	-	-	-	-	23.74	23.66
CA_[2A]-[48D]-66A	LTE B66	5	131997	1712.5	QPSK	1	12	66461	2112.5	2x2	LTE B2	20	900	1960	4x4	LTE B48	20	55990	3625	4x4	LTE B48	20	56188	3644.8	4x4	LTE B48	20	56386	3664.6	4x4	-	-	-	-	-	23.73	23.66
CA_[2A]-[48D]-[66A]	LTE B66	5	131997	1712.5	QPSK	1	12	66461	2112.5	4x4	LTE B2	20	900	1960	4x4	LTE B48	20	55990	3625	4x4	LTE B48	20	56188	3644.8	4x4	LTE B48	20	56386	3664.6	4x4	-	-	-	-	-	23.73	23.66
CA_5A-48D-[66A]	LTE B66	5	131997	1712.5	QPSK	1	12	66461	2112.5	4x4	LTE B5	10	2525	881.5	2x2	LTE B48	20	55990	3625	2x2	LTE B48	20	56188	3644.8	2x2	LTE B48	20	56386	3664.6	2x2	-	-	-	-	-	23.75	23.66
CA_5A-[48D]-66A	LTE B66	5	131997	1712.5	QPSK	1	12	66461	2112.5	2x2	LTE B5	10	2525	881.5	2x2	LTE B48	20	55990	3625	4x4	LTE B48	20	56188	3644.8	4x4	LTE B48	20	56386	3664.6	4x4	-	-	-	-	-	23.75	23.66
CA_5A-[48D]-[66A]	LTE B66	5	131997	1712.5	QPSK	1	12	66461	2112.5	4x4	LTE B5	10	2525	881.5	2x2	LTE B48	20	55990	3625	4x4	LTE B48	20	56188	3644.8	4x4	LTE B48	20	56386	3664.6	4x4	-	-	-	-	-	23.76	23.66
CA_13A-48D-[66A]	LTE B66	5	131997	1712.5	QPSK	1	12	66461	2112.5	4x4	LTE B13	10	5230	751	2x2	LTE B48	20	55990	3625	2x2	LTE B48	20	56188	3644.8	2x2	LTE B48	20	56386	3664.6	2x2	-	-	-	-	-	23.74	23.66
CA_13A-[48D]-66A	LTE B66	5	131997	1712.5	QPSK	1	12	66461	2112.5	2x2	LTE B13	10	5230	751	2x2	LTE B48	20	55990	3625	4x4	LTE B48	20	56188	3644.8	4x4	LTE B48	20	56386	3664.6	4x4	-	-	-	-	-	23.70	23.66
CA_13A-[48D]-[66A]	LTE B66	5	131997	1712.5	QPSK	1	12	66461	2112.5	4x4	LTE B13	10	5230	751	2x2	LTE B48	20	55990	3625	4x4	LTE B48	20	56188	3644.8	4x4	LTE B48	20	56386	3664.6	4x4	-	-	-	-	-	23.75	23.66
CA_48C-48C-[66A]	LTE B66	5	131997	1712.5	QPSK	1	12	66461	2112.5	4x4	LTE B48	20	55990	3625	2x2	LTE B48	20	56188	3644.8	2x2	LTE B48	20	55340	3560	2x2	LTE B48	20	55538	3579.8	2x2	-	-	-	-	-	23.76	23.66
CA_[48C]-48C-66A	LTE B66	5	131997	1712.5	QPSK	1	12	66461	2112.5	2x2	LTE B48	20	55990	3625	2x2	LTE B48	20	56188	3644.8	2x2	LTE B48	20	55340	3560	4x4	LTE B48	20	55538	3579.8	4x4	-	-	-	-	-	23.71	23.66
CA_[48C]-48C-[66A]	LTE B66	5	131997	1712.5	QPSK	1	12	66461	2112.5	4x4	LTE B48	20	55990	3625	4x4	LTE B48	20	56188	3644.8	4x4	LTE B48	20	55340	3560	2x2	LTE B48	20	55538	3579.8	2x2	-	-	-	-	-	23.74	23.66
CA_[48C]-[48C]-66A	LTE B66	5	131997	1712.5	QPSK	1	12	66461	2112.5	2x2	LTE B48	20	55990	3625	4x4	LTE B48	20	56188	3644.8	4x4	LTE B48	20	55340	3560	4x4	LTE B48	20	55538	3579.8	4x4	-	-	-	-	-	23.77	23.66
CA_[48C]-[48C]-[66A]	LTE B66	5	131997	1712.5	QPSK	1	12	66461	2112.5	4x4	LTE B48	20	55990	3625	4x4	LTE B48	20	56188	3644.8	4x4	LTE B48	20	55340	3560	4x4	LTE B48	20	55538	3579.8	4x4	-	-	-	-	-	23.75	23.66
CA_48A-48D-[66A]	LTE B66	5	131997	1712.5	QPSK	1	12	66461	2112.5	4x4	LTE B48	20	55990	3625	2x2	LTE B48	20	56640	3690	2x2	LTE B48	20	56442	3670.2	2x2	LTE B48	20	56244	3650.4	2x2	-	-	-	-	-	23.77	23.66
CA_48A-[48D]-66A	LTE B66	5	131997	1712.5	QPSK	1	12	66461	2112.5	2x2	LTE B48	20	55990	3625	2x2	LTE B48	20	56640	3690	4x4	LTE B48	20	56442	3670.2	4x4	LTE B48	20	56244	3650.4	4x4	-	-	-	-	-	23.76	23.66
CA_48A-[48D]-[66A]	LTE B66	5	131997	1712.5	QPSK	1	12	66461	2112.5	4x4	LTE B48	20	55990	3625	2x2	LTE B48	20	56640	3690	4x4	LTE B48	20	56442	3670.2	4x4	LTE B48	20	56244	3650.4	4x4	-	-	-	-	-	23.74	23.66
CA_[48A]-48D-66A	LTE B66	5	131997	1712.5	QPSK	1	12	66461	2112.5	2x2	LTE B48	20	55990	3625	4x4	LTE B48	20	56640	3690	2x2	LTE B48	20	56442	3670.2	2x2	LTE B48	20	56244	3650.4	2x2	-	-	-	-	-	23.75	23.66
CA_[48A]-48D-[66A]	LTE B66	5	131997	1712.5	QPSK	1	12	66461	2112.5	4x4	LTE B48	20	55990	3625	4x4	LTE B48	20	56640	3690	2x2	LTE B48	20	56442	3670.2	2x2	LTE B48	20	56244	3650.4	2x2	-	-	-	-	-	23.76	23.66
CA_[48A]-[48D]-66A	LTE B66	5	131997	1712.5	QPSK	1	12	66461	2112.5	2x2	LTE B48	20	55990	3625	4x4	LTE B48	20	56640	3690	4x4	LTE B48	20	56442	3670.2	4x4	LTE B48	20	56244	3650.4	4x4	-	-	-	-	-	23.78	23.66
CA_[48A]-[48D]-[66A]	LTE B66	5	131997	1712.5	QPSK	1	12	66461	2112.5	4x4	LTE B48	20	55990	3625	4x4	LTE B48	20	56640	3690	4x4	LTE B48	20	56442	3670.2	4x4	LTE B48	20	56244	3650.4	4x4	-	-	-	-	-	23.74	23.66
CA_48E-[66A]	LTE B66	5	131997	1712.5	QPSK	1	12	66461	2112.5	4x4	LTE B48	20	55990	3625	2x2	LTE B48	20	56188	3644.8	2x2	LTE B48	20	56386	3664.6	2x2	LTE B48	20	56584	3684.4	2x2	-	-	-	-	-	23.75	23.66
CA_[48E]-66A	LTE B66	5	131997	1712.5	QPSK	1	12	66461	2112.5	2x2	LTE B48	20	55990	3625	4x4	LTE B48	20	56188	3644.8	4x4	LTE B48	20	56386	3664.6	4x4	LTE B48	20	56584	3684.4	4x4	-	-	-	-	-	23.73	23.66
CA_[48E]-[66A]	LTE B66	5	131997	1712.5	QPSK	1	12	66461	2112.5	4x4	LTE B48	20	55990	3625	4x4	LTE B48	20	56188	3644.8	4x4	LTE B48	20	56386	3664.6	4x4	LTE B48	20	56584	3684.4	4x4	-	-	-	-	-	23.75	23.66
CA_2A-5A-48C-[66A]-66A	LTE B66	5	131997	1712.5	QPSK	1	12	66461	2112.5	4x4	LTE B66	20	67236	2190	2x2	LTE B2	20	900	1960	2x2	LTE B5	10	2525	881.5	2x2	LTE B48	20	55990	3625	2x2	LTE B48	20	56188	3644.8	2x2	23.63	23.66
CA_2A-5A-48C-66A-[66A]	LTE B66	5	131997	1712.5	QPSK	1	12	66461	2112.5	2x2	LTE B66	20	67236	2190	4x4	LTE B2	20	900	1960	2x2	LTE B5	10	2525	881.5	2x2	LTE B48	20	55990	3625	2x2	LTE B48	20	56188	3644.8	2x2	23.46	23.66
CA_2A-5A-48C-[66A]-[66A]	LTE B66	5	131997	1712.5	QPSK	1	12	66461	2112.5	4x4	LTE B66	20	67236	2190	4x4	LTE B2	20	900	1960	2x2	LTE B5	10	2525	881.5	2x2	LTE B48	20	55990	3625	2x2	LTE B48	20	56188	3644.8	2x2	23.54	23.66
CA_2A-5A-[48C]-66A-66A	LTE B66	5	131997	1712.5	QPSK	1	12	66461	2112.5	2x2	LTE B66	20	67236	2190	2x2	LTE B2	20	900	1960	2x2	LTE B5	10	2525	881.5	2x2	LTE B48	20	55990	3625	4x4	LTE B48	20	56188	3644.8	4x4	23.34	23.66
CA_2A-5A-[48C]-[66A]-66A	LTE B66	5	131997	1712.5	QPSK	1	12	66461	2112.5	4x4	LTE B66	20	67236	2190	2x2	LTE B2	20	900	1960	2x2	LTE B5	10	2525	881.5	2x2	LTE B48	20	55990	3625	4x4	LTE B48	20	56188	3644.8	4x4	23.55	23.66
CA_2A-5A-[48C]-66A-[66A]	LTE B66	5	131997	1712.5	QPSK	1	12	66461	2112.5	2x2	LTE B66	20	67236	2190	4x4	LTE B2	20	900	1960	2x2	LTE B5	10	2525	881.5	2x2	LTE B48	20	55990	3625	4x4	LTE B48	20	56188	3644.8	4x4	23.55	23.66
CA_[2A]-5A-48C-66A-66A	LTE B66	5	131997	1712.5	QPSK	1	12	66461	2112.5	2x2	LTE B66	20	67236	2190	2x2	LTE B2	20	900	1960	4x4	LTE B5	10	2525	881.5	2x2	LTE B48	20	55990	3625	2x2	LTE B48	20	56188	3644.8	2x2	23.50	23.66
CA_[2A]-5A-48C-[66A]-66A	LTE B66	5	131997	1712.5	QPSK	1	12	66461	2112.5	4x4	LTE B66	20	67236	2190	2x2	LTE B2	20	900	1960	4x4	LTE B5	10	2525	881.5	2x2	LTE B48	20	55990	3625	2x2	LTE B48	20	56188	3644.8	2x2	23.56	23.66
CA_[2A]-5A-48C-66A-[66A]	LTE B66	5	131997	1712.5	QPSK	1	12	66461	2112.5	2x2	LTE B66	20	67236	2190	4x4	LTE B2	20	900	1960	4x4	LTE B5	10	2525	881.5	2x2	LTE B48	20	55990	3625	2x2	LTE B48	20	56188	3644.8	2x2	23.52	23.66
CA_[2A]-5A-48C-[66A]-[66A]	LTE B66	5	131997	1712.5	QPSK	1	12	66461	2112.5	4x4	LTE B66	20	67236	2190	4x4	LTE B2	20	900	1960	4x4	LTE B5	10	2525	881.5	2x2	LTE B48	20	55990	3625	2x2	LTE B48	20	56188	3644.8	2x2	23.58	23.66
CA_[2A]-5A-[48C]-66A-66A	LTE B66	5	131997	1712.5	QPSK	1	12	66461	2112.5	2x2	LTE B66	20	67236	2190	2x2	LTE B2	20	900	1960	4x4	LTE B5	10	2525	881.5	2x2	LTE B48	20	55990	3625	4x4	LTE B48	20	56188	3644.8	4x4	23.51	23.66
CA_[2A]-5A-[48C]-[66A]-66A	LTE B66	5	131997	1712.5	QPSK	1	12	66461	2112.5	4x4	LTE B66	20	67236	2190	2x2	LTE B2	20	900	1960	4x4	LTE B5	10	2525	881.5	2x2	LTE B48	20	55990	3625	4x4	LTE B48	20	56188	3644.8	4x4	23.52	23.66
CA_[2A]-5A-[48C]-66A-[66A]	LTE B66	5	131997	1712.5	QPSK	1	12	66461	2112.5	2x2	LTE B66	20	67236	2190	4x4	LTE B2	20	900	1960	4x4	LTE B5	10	2525	881.5	2x2	LTE B48	20	55990	3625	4x4	LTE B48	20	56188	3644.8	4x4	23.58	23.66
CA_2A-[48E]-66A	LTE B66	5	131997	1712.5	QPSK	1	12	66461	2112.5	2x2	LTE B2	20	900	1960	2x2	LTE B48	20	55990	3625	4x4	LTE B48	20	56188	3644.8	4x4	LTE B48	20	56386	3664.6	4x4	LTE B48	20	55792	3605.2	4x4	23.57	23.66
CA_[2A]-48E-66A	LTE B66	5	131997	1712.5	QPSK	1	12	66461	2112.5	2x2	LTE B2	20	900	1960	4x4	LTE B48	20	55990	3625	2x2	LTE B48	20	56188	3644.8	2x2	LTE B48	20	56386	3664.6	2x2	LTE B48	20	55792	3605.2	2x2	23.49	23.66
CA_[2A]-48E-[66A]	LTE B66	5	131997	1712.5	QPSK	1	12	66461	2112.5	4x4	LTE B2	20	900	1960	4x4	LTE B48	20	55990	3625	2x2	LTE B48	20	56188	3644.8	2x2	LTE B48	20	56386	3664.6	2x2	LTE B48	20	55792	3605.2	2x2	23.50	23.66
CA_5A-48D-[66A]-66A	LTE B66	5	131997	1712.5	QPSK	1	12	66461	2112.5	4x4	LTE B66	20	67236	2190	2x2	LTE B5	10	2525	881.5	2x2	LTE B48	20	55990	3625	2x2	LTE B48	20	56188	3644.8	2x2	LTE B48	20	56386	3664.6	2x2	23.57	23.66
CA_5A-48D-66A-[66A]	LTE B66	5	131997	1712.5	QPSK	1	12	66461	2112.5	2x2	LTE B66	20	67236	2190	4x4	LTE B5	10	2525	881.5	2x2	LTE B48	20	55990	3625	2x2	LTE B48	20	56188	3644.8	2x2	LTE B48	20	56386	3664.6	2x2	23.56	23.66
CA_5A-48D-[66A]-[66A]	LTE B66	5	131997	1712.5	QPSK	1	12	66461	2112.5	4x4	LTE B66	20	67236	2190	4x4	LTE B5	10	2525	881.5	2x2	LTE B48	20	55990	3625	2x2	LTE B48	20	56188	3644.8	2x2	LTE B48	20	56386	3664.6	2x2	23.59	23.66
CA_5A-[48D]-[66A]-66A	LTE B66	5	131997	1712.5	QPSK	1	12	66461	2112.5	4x4	LTE B66	20	67236	2190	2x2	LTE B5	10	2525	881.5	2x2	LTE B48	20	55990	3625	4x4	LTE B48	20	56188	3644.8	4x4	LTE B48	20	56386	3664.6	4x4	23.61	23.66

I.3.6 LTE Band 25 as PCC

Table I-18
Maximum Output Powers

	PCC										SCC 1					SCC 2					SCC 3					Power	
Combination	PCC Band	PCC BW [MHz]	PCC (UL) Ch.	PCC (UL) Freq. [MHz]	Mod.	PCC UL# RB	PCC UL RB Offset	PCC (DL) Ch.	PCC (DL) Freq. [MHz]	DL Ant. Config.	SCC Band	SCC BW [MHz]	SCC (DL) Ch.	SCC (DL) Freq. [MHz]	DL Ant. Config.	SCC Band	SCC BW [MHz]	SCC (DL) Ch.	SCC (DL) Freq. [MHz]	DL Ant. Config.	SCC Band	SCC BW [MHz]	SCC (DL) Ch.	SCC (DL) Freq. [MHz]	DL Ant. Config.	LTE Tx.Power with DL CA Enabled (dBm)	LTE Single Carrier Tx Power (dBm)
CA_5A-[25A]	LTE B25	5	26665	1912.5	QPSK	1	24	8665	1992.5	4x4	LTE B5	10	2525	881.5	2x2	-	-	-	-	-	-	-	-	-	-	23.77	23.88
CA_12A-[25A]	LTE B25	5	26665	1912.5	QPSK	1	24	8665	1992.5	4x4	LTE B12	10	5095	737.5	2x2	-	-	-	-	-	-	-	-	-	-	23.82	23.88
A_25A-[25A] (1)	LTE B25	5	26665	1912.5	QPSK	1	24	8665	1992.5	2x2	LTE B25	20	8140	1940	4x4	-	-	-	-	-	-	-	-	-	-	23.78	23.88
A_[25A]-25A (1)	LTE B25	5	26665	1912.5	QPSK	1	24	8665	1992.5	4x4	LTE B25	20	8140	1940	2x2	-	-	-	-	-	-	-	-	-	-	23.86	23.88
_[25A]-[25A] (1)	LTE B25	5	26665	1912.5	QPSK	1	24	8665	1992.5	4x4	LTE B25	20	8140	1940	4x4	-	-	-	-	-	-	-	-	-	-	23.84	23.88
CA_25A-[41A]	LTE B25	5	26665	1912.5	QPSK	1	24	8665	1992.5	2x2	LTE B41	20	40620	2593	4x4	-	-	-	-	-	-	-	-	-	-	23.85	23.88
CA_[25A]-41A	LTE B25	5	26665	1912.5	QPSK	1	24	8665	1992.5	4x4	LTE B41	20	40620	2593	2x2	-	-	-	-	-	-	-	-	-	-	23.83	23.88
A_[25A]-[41A]	LTE B25	5	26665	1912.5	QPSK	1	24	8665	1992.5	4x4	LTE B41	20	40620	2593	4x4	-	-	-	-	-	-	-	-	-	-	23.86	23.88
CA_25A-[41C]	LTE B25	5	26665	1912.5	QPSK	1	24	8665	1992.5	2x2	LTE B41	20	40620	2593	4x4	LTE B41	20	40422	2573.2	4x4	-	-	-	-	-	23.90	23.88
CA_[25A]-41C	LTE B25	5	26665	1912.5	QPSK	1	24	8665	1992.5	4x4	LTE B41	20	40620	2593	2x2	LTE B41	20	40422	2573.2	2x2	-	-	-	-	-	23.93	23.88
A_[25A]-[41C]	LTE B25	5	26665	1912.5	QPSK	1	24	8665	1992.5	4x4	LTE B41	20	40620	2593	4x4	LTE B41	20	40422	2573.2	4x4	-	-	-	-	-	23.88	23.88
CA_25A-[41D]	LTE B25	5	26665	1912.5	QPSK	1	24	8665	1992.5	2x2	LTE B41	20	40422	2573.2	4x4	LTE B41	20	40620	2593	4x4	LTE B41	20	40818	2612.8	4x4	23.90	23.88
CA_[25A]-41D	LTE B25	5	26665	1912.5	QPSK	1	24	8665	1992.5	4x4	LTE B41	20	40422	2573.2	2x2	LTE B41	20	40620	2593	2x2	LTE B41	20	40818	2612.8	2x2	23.91	23.88
A_[25A]-[41D]	LTE B25	5	26665	1912.5	QPSK	1	24	8665	1992.5	4x4	LTE B41	20	40422	2573.2	4x4	LTE B41	20	40620	2593	4x4	LTE B41	20	40818	2612.8	4x4	23.87	23.88

I.3.7 LTE Band 30 as PCC

Table I-19
Maximum Output Powers

	PCC										SCC 1					SCC 2					SCC 3					SCC 4					Power	
Combination	PCC Band	PCC BW [MHz]	PCC (UL) Ch.	PCC (UL) Freq. [MHz]	Mod.	PCC UL# RB	PCC UL RB Offset	PCC (DL) Ch.	PCC (DL) Freq. [MHz]	DL Ant. Config.	SCC Band	SCC BW [MHz]	SCC (DL) Ch.	SCC (DL) Freq. [MHz]	DL Ant. Config.	SCC Band	SCC BW [MHz]	SCC (DL) Ch.	SCC (DL) Freq. [MHz]	DL Ant. Config.	SCC Band	SCC BW [MHz]	SCC (DL) Ch.	SCC (DL) Freq. [MHz]	DL Ant. Config.	SCC Band	SCC BW [MHz]	SCC (DL) Ch.	SCC (DL) Freq. [MHz]	DL Ant. Config.	LTE Tx.Power with DL CA Enabled (dBm)	LTE Single Carrier Tx Power (dBm)
CA_29A-30A-[66A]-66A	LTE B30	5	27710	2310	QPSK	1	24	9820	2355	2x2	LTE B29	10	9715	722.5	2x2	LTE B66	20	66786	2145	4x4	LTE B66	20	67236	2190	2x2	-	-	-	-	-	22.54	22.55
CA_29A-30A-[66A]-[66A]	LTE B30	5	27710	2310	QPSK	1	24	9820	2355	2x2	LTE B29	10	9715	722.5	2x2	LTE B66	20	66786	2145	4x4	LTE B66	20	67236	2190	4x4	-	-	-	-	-	22.51	22.55
CA_29A-[30A]-66A-66A	LTE B30	5	27710	2310	QPSK	1	24	9820	2355	4x4	LTE B29	10	9715	722.5	2x2	LTE B66	20	66786	2145	2x2	LTE B66	20	67236	2190	2x2	-	-	-	-	-	22.54	22.55
CA_29A-[30A]-[66A]-66A	LTE B30	5	27710	2310	QPSK	1	24	9820	2355	4x4	LTE B29	10	9715	722.5	2x2	LTE B66	20	66786	2145	4x4	LTE B66	20	67236	2190	2x2	-	-	-	-	-	22.40	22.55
CA_29A-[30A]-[66A]-[66A]	LTE B30	5	27710	2310	QPSK	1	24	9820	2355	4x4	LTE B29	10	9715	722.5	2x2	LTE B66	20	66786	2145	4x4	LTE B66	20	67236	2190	4x4	-	-	-	-	-	22.52	22.55
CA_2A-2A-5A-30A-[66A]	LTE B30	5	27710	2310	QPSK	1	24	9820	2355	2x2	LTE B2	20	900	1960	2x2	LTE B2	20	700	1940	2x2	LTE B5	10	2525	881.5	2x2	LTE B66	20	66786	2145	4x4	22.59	22.55
CA_2A-2A-5A-[30A]-66A	LTE B30	5	27710	2310	QPSK	1	24	9820	2355	4x4	LTE B2	20	900	1960	2x2	LTE B2	20	700	1940	2x2	LTE B5	10	2525	881.5	2x2	LTE B66	20	66786	2145	2x2	22.61	22.55
CA_2A-2A-5A-[30A]-[66A]	LTE B30	5	27710	2310	QPSK	1	24	9820	2355	4x4	LTE B2	20	900	1960	2x2	LTE B2	20	700	1940	2x2	LTE B5	10	2525	881.5	2x2	LTE B66	20	66786	2145	4x4	22.59	22.55
CA_[2A]-2A-5A-30A-66A	LTE B30	5	27710	2310	QPSK	1	24	9820	2355	2x2	LTE B2	20	900	1960	4x4	LTE B2	20	700	1940	2x2	LTE B5	10	2525	881.5	2x2	LTE B66	20	66786	2145	2x2	22.58	22.55
CA_[2A]-2A-5A-30A-[66A]	LTE B30	5	27710	2310	QPSK	1	24	9820	2355	2x2	LTE B2	20	900	1960	4x4	LTE B2	20	700	1940	2x2	LTE B5	10	2525	881.5	2x2	LTE B66	20	66786	2145	4x4	22.55	22.55
CA_[2A]-2A-5A-[30A]-66A	LTE B30	5	27710	2310	QPSK	1	24	9820	2355	4x4	LTE B2	20	900	1960	4x4	LTE B2	20	700	1940	2x2	LTE B5	10	2525	881.5	2x2	LTE B66	20	66786	2145	2x2	22.57	22.55
CA_[2A]-2A-5A-[30A]-[66A]	LTE B30	5	27710	2310	QPSK	1	24	9820	2355	4x4	LTE B2	20	900	1960	4x4	LTE B2	20	700	1940	2x2	LTE B5	10	2525	881.5	2x2	LTE B66	20	66786	2145	4x4	22.54	22.55
CA_[2A]-[2A]-5A-30A-66A	LTE B30	5	27710	2310	QPSK	1	24	9820	2355	2x2	LTE B2	20	900	1960	4x4	LTE B2	20	700	1940	4x4	LTE B5	10	2525	881.5	2x2	LTE B66	20	66786	2145	2x2	22.52	22.55
CA_[2A]-[2A]-5A-30A-[66A]	LTE B30	5	27710	2310	QPSK	1	24	9820	2355	2x2	LTE B2	20	900	1960	4x4	LTE B2	20	700	1940	4x4	LTE B5	10	2525	881.5	2x2	LTE B66	20	66786	2145	4x4	22.56	22.55
CA_[2A]-[2A]-5A-[30A]-66A	LTE B30	5	27710	2310	QPSK	1	24	9820	2355	4x4	LTE B2	20	900	1960	4x4	LTE B2	20	700	1940	4x4	LTE B5	10	2525	881.5	2x2	LTE B66	20	66786	2145	2x2	22.57	22.55
CA_[2A]-[2A]-5A-[30A]-[66A]	LTE B30	5	27710	2310	QPSK	1	24	9820	2355	4x4	LTE B2	20	900	1960	4x4	LTE B2	20	700	1940	4x4	LTE B5	10	2525	881.5	2x2	LTE B66	20	66786	2145	4x4	22.56	22.55
CA_2A-2A-12A-30A-[66A]	LTE B30	5	27710	2310	QPSK	1	24	9820	2355	2x2	LTE B2	20	900	1960	2x2	LTE B2	20	700	1940	2x2	LTE B12	10	5095	737.5	2x2	LTE B66	20	66786	2145	4x4	22.50	22.55
CA_2A-2A-12A-[30A]-66A	LTE B30	5	27710	2310	QPSK	1	24	9820	2355	4x4	LTE B2	20	900	1960	2x2	LTE B2	20	700	1940	2x2	LTE B12	10	5095	737.5	2x2	LTE B66	20	66786	2145	2x2	22.62	22.55
CA_2A-2A-12A-[30A]-[66A]	LTE B30	5	27710	2310	QPSK	1	24	9820	2355	4x4	LTE B2	20	900	1960	2x2	LTE B2	20	700	1940	2x2	LTE B12	10	5095	737.5	2x2	LTE B66	20	66786	2145	4x4	22.60	22.55
CA_[2A]-2A-12A-30A-66A	LTE B30	5	27710	2310	QPSK	1	24	9820	2355	2x2	LTE B2	20	900	1960	4x4	LTE B2	20	700	1940	2x2	LTE B12	10	5095	737.5	2x2	LTE B66	20	66786	2145	2x2	22.56	22.55
CA_[2A]-2A-12A-30A-[66A]	LTE B30	5	27710	2310	QPSK	1	24	9820	2355	2x2	LTE B2	20	900	1960	4x4	LTE B2	20	700	1940	2x2	LTE B12	10	5095	737.5	2x2	LTE B66	20	66786	2145	4x4	22.55	22.55
CA_[2A]-2A-12A-[30A]-66A	LTE B30	5	27710	2310	QPSK	1	24	9820	2355	4x4	LTE B2	20	900	1960	4x4	LTE B2	20	700	1940	2x2	LTE B12	10	5095	737.5	2x2	LTE B66	20	66786	2145	2x2	22.47	22.55
CA_[2A]-2A-12A-[30A]-[66A]	LTE B30	5	27710	2310	QPSK	1	24	9820	2355	4x4	LTE B2	20	900	1960	4x4	LTE B2	20	700	1940	2x2	LTE B12	10	5095	737.5	2x2	LTE B66	20	66786	2145	4x4	22.48	22.55
CA_[2A]-[2A]-12A-30A-66A	LTE B30	5	27710	2310	QPSK	1	24	9820	2355	2x2	LTE B2	20	900	1960	4x4	LTE B2	20	700	1940	4x4	LTE B12	10	5095	737.5	2x2	LTE B66	20	66786	2145	2x2	22.57	22.55
CA_[2A]-[2A]-12A-30A-[66A]	LTE B30	5	27710	2310	QPSK	1	24	9820	2355	2x2	LTE B2	20	900	1960	4x4	LTE B2	20	700	1940	4x4	LTE B12	10	5095	737.5	2x2	LTE B66	20	66786	2145	4x4	22.57	22.55
CA_[2A]-[2A]-12A-[30A]-66A	LTE B30	5	27710	2310	QPSK	1	24	9820	2355	4x4	LTE B2	20	900	1960	4x4	LTE B2	20	700	1940	4x4	LTE B12	10	5095	737.5	2x2	LTE B66	20	66786	2145	2x2	22.49	22.55
CA_[2A]-[2A]-12A-[30A]-[66A]	LTE B30	5	27710	2310	QPSK	1	24	9820	2355	4x4	LTE B2	20	900	1960	4x4	LTE B2	20	700	1940	4x4	LTE B12	10	5095	737.5	2x2	LTE B66	20	66786	2145	4x4	22.46	22.55
CA_2A-2A-14A-30A-[66A]	LTE B30	5	27710	2310	QPSK	1	24	9820	2355	2x2	LTE B2	20	900	1960	2x2	LTE B2	20	700	1940	2x2	LTE B14	10	5330	763	2x2	LTE B66	20	66786	2145	4x4	22.55	22.55
CA_2A-2A-14A-[30A]-66A	LTE B30	5	27710	2310	QPSK	1	24	9820	2355	4x4	LTE B2	20	900	1960	2x2	LTE B2	20	700	1940	2x2	LTE B14	10	5330	763	2x2	LTE B66	20	66786	2145	2x2	22.55	22.55
CA_2A-2A-14A-[30A]-[66A]	LTE B30	5	27710	2310	QPSK	1	24	9820	2355	4x4	LTE B2	20	900	1960	2x2	LTE B2	20	700	1940	2x2	LTE B14	10	5330	763	2x2	LTE B66	20	66786	2145	4x4	22.60	22.55
CA_[2A]-2A-14A-30A-66A	LTE B30	5	27710	2310	QPSK	1	24	9820	2355	2x2	LTE B2	20	900	1960	4x4	LTE B2	20	700	1940	2x2	LTE B14	10	5330	763	2x2	LTE B66	20	66786	2145	2x2	22.60	22.55
CA_[2A]-2A-14A-30A-[66A]	LTE B30	5	27710	2310	QPSK	1	24	9820	2355	2x2	LTE B2	20	900	1960	4x4	LTE B2	20	700	1940	2x2	LTE B14	10	5330	763	2x2	LTE B66	20	66786	2145	4x4	22.59	22.55
CA_[2A]-2A-14A-[30A]-66A	LTE B30	5	27710	2310	QPSK	1	24	9820	2355	4x4	LTE B2	20	900	1960	4x4	LTE B2	20	700	1940	2x2	LTE B14	10	5330	763	2x2	LTE B66	20	66786	2145	2x2	22.59	22.55
CA_[2A]-2A-14A-[30A]-[66A]	LTE B30	5	27710	2310	QPSK	1	24	9820	2355	4x4	LTE B2	20	900	1960	4x4	LTE B2	20	700	1940	2x2	LTE B14	10	5330	763	2x2	LTE B66	20	66786	2145	4x4	22.61	22.55
CA_[2A]-[2A]-14A-30A-66A	LTE B30	5	27710	2310	QPSK	1	24	9820	2355	2x2	LTE B2	20	900	1960	4x4	LTE B2	20	700	1940	4x4	LTE B14	10	5330	763	2x2	LTE B66	20	66786	2145	2x2	22.60	22.55
CA_[2A]-[2A]-14A-30A-[66A]	LTE B30	5	27710	2310	QPSK	1	24	9820	2355	2x2	LTE B2	20	900	1960	4x4	LTE B2	20	700	1940	4x4	LTE B14	10	5330	763	2x2	LTE B66	20	66786	2145	4x4	22.56	22.55
CA_[2A]-[2A]-14A-[30A]-66A	LTE B30	5	27710	2310	QPSK	1	24	9820	2355	4x4	LTE B2	20	900	1960	4x4	LTE B2	20	700	1940	4x4	LTE B14	10	5330	763	2x2	LTE B66	20	66786	2145	2x2	22.62	22.55
CA_[2A]-[2A]-14A-[30A]-[66A]	LTE B30	5	27710	2310	QPSK	1	24	9820	2355	4x4	LTE B2	20	900	1960	4x4	LTE B2	20	700	1940	4x4	LTE B14	10	5330	763	2x2	LTE B66	20	66786	2145	4x4	22.64	22.55
CA_2A-2A-29A-30A-[66A]	LTE B30	5	27710	2310	QPSK	1	24	9820	2355	2x2	LTE B2	20	900	1960	2x2	LTE B2	20	700	1940	2x2	LTE B29	10	9715	722.5	2x2	LTE B66	20	66786	2145	4x4	22.60	22.55
CA_2A-2A-29A-[30A]-66A	LTE B30	5	27710	2310	QPSK	1	24	9820	2355	4x4	LTE B2	20	900	1960	2x2	LTE B2	20	700	1940	2x2	LTE B29	10	9715	722.5	2x2	LTE B66	20	66786	2145	2x2	22.58	22.55
CA_2A-2A-29A-[30A]-[66A]	LTE B30	5	27710	2310	QPSK	1	24	9820	2355	4x4	LTE B2	20	900	1960	2x2	LTE B2	20	700	1940	2x2	LTE B29	10	9715	722.5	2x2	LTE B66	20	66786	2145	4x4	22.57	22.55
CA_[2A]-2A-29A-30A-66A	LTE B30	5	27710	2310	QPSK	1	24	9820	2355	2x2	LTE B2	20	900	1960	4x4	LTE B2	20	700	1940	2x2	LTE B29	10	9715	722.5	2x2	LTE B66	20	66786	2145	2x2	22.59	22.55
CA_[2A]-2A-29A-30A-[66A]	LTE B30	5	27710	2310	QPSK	1	24	9820	2355	2x2	LTE B2	20	900	1960	4x4	LTE B2	20	700	1940	2x2	LTE B29	10	9715	722.5	2x2	LTE B66	20	66786	2145	4x4	22.56	22.55
CA_[2A]-2A-29A-[30A]-66A	LTE B30	5	27710	2310	QPSK	1	24	9820	2355	4x4	LTE B2	20	900	1960	4x4	LTE B2	20	700	1940	2x2	LTE B29	10	9715	722.5	2x2	LTE B66	20	66786	2145	2x2	22.56	22.55
CA_[2A]-2A-29A-[30A]-[66A]	LTE B30	5	27710	2310	QPSK	1	24	9820	2355	4x4	LTE B2	20	900	1960	4x4	LTE B2	20	700	1940	2x2	LTE B29	10	9715	722.5	2x2	LTE B66	20	66786	2145	4x4	22.55	22.55
CA_[2A]-[2A]-29A-30A-66A	LTE B30	5	27710	2310	QPSK	1	24	9820	2355	2x2	LTE B2	20	900	1960	4x4	LTE B2	20	700	1940	4x4	LTE B29	10	9715	722.5	2x2	LTE B66	20	66786	2145	2x2	22.57	22.55
CA_[2A]-[2A]-29A-30A-[66A]	LTE B30	5	27710	2310	QPSK	1	24	9820	2355	2x2	LTE B2	20	900	1960	4x4	LTE B2	20	700	1940	4x4	LTE B29	10	9715	722.5	2x2	LTE B66	20	66786	2145	4x4	22.54	22.55
CA_[2A]-[2A]-29A-[30A]-66A	LTE B30	5	27710	2310	QPSK	1	24	9820	2355	4x4	LTE B2	20	900	1960	4x4	LTE B2	20	700	1940	4x4	LTE B29	10	9715	722.5	2x2	LTE B66	20	66786	2145	2x2	22.62	22.55
CA_[2A]-[2A]-29A-[30A]-[66A]	LTE B30	5	27710	2310	QPSK	1	24	9820	2355	4x4	LTE B2	20	900	1960	4x4	LTE B2	20	700	1940	4x4	LTE B29	10	9715	722.5	2x2	LTE B66	20	66786	2145	4x4	22.60	22.55
CA_2A-5A-30A-[66A]-66A	LTE B30	5	27710	2310	QPSK	1	24	9820	2355	2x2	LTE B2	20	900	1960	2x2	LTE B5	10	2525	881.5	2x2	LTE B66	20	66786	2145	4x4	LTE B66	20	67236	2190	2x2	22.55	22.55
CA_2A-5A-30A-[66A]-[66A]	LTE B30	5	27710	2310	QPSK	1	24	9820	2355	2x2	LTE B2	20	900	1960	2x2	LTE B5	10	2525	881.5	2x2	LTE B66	20	66786	2145	4x4	LTE B66	20	67236	2190	4x4	22.56	22.55
CA_2A-5A-[30A]-66A-66A	LTE B30	5	27710	2310	QPSK	1	24	9820	2355	4x4	LTE B2	20	900	1960	2x2	LTE B5	10	2525	881.5	2x2	LTE B66	20	66786	2145	2x2	LTE B66	20	67236	2190	2x2	22.53	22.55
CA_2A-5A-[30A]-[66A]-66A	LTE B30	5	27710	2310	QPSK	1	24	9820	2355	4x4	LTE B2	20	900	1960	2x2	LTE B5	10	2525	881.5	2x2	LTE B66	20	66786	2145	4x4	LTE B66	20	67236	2190	2x2	22.57	22.55
CA_2A-5A-[30A]-[66A]-[66A]	LTE B30	5	27710	2310	QPSK	1	24	9820	2355	4x4	LTE B2	20	900	1960	2x2	LTE B5	10	2525	881.5	2x2	LTE B66	20	66786	2145	4x4	LTE B66	20	67236	2190	4x4	22.56	22.55
CA_[2A]-5A-30A-66A-66A	LTE B30	5	27710	2310	QPSK	1	24	9820	2355	2x2	LTE B2	20	900	1960	4x4	LTE B5	10	2525	881.5	2x2	LTE B66	20	66786	2145	2x2	LTE B66	20	67236	2190	2x2	22.54	22.55
CA_[2A]-5A-30A-[66A]-66A	LTE B30	5	27710	2310	QPSK	1	24	9820	2355	2x2	LTE B2	20	900	1960	4x4	LTE B5	10	2525	881.5	2x2	LTE B66	20	66786	2145	4x4	LTE B66	20	67236	2190	2x2	22.57	22.55
CA_[2A]-5A-30A-[66A]-[66A]	LTE B30	5	27710	2310	QPSK	1	24	9820	2355	2x2	LTE B2	20	900	1960	4x4	LTE B5	10	2525	881.5	2x2	LTE B66	20	66786	2145	4x4	LTE B66	20	67236	2190	4x4	22.52	22.55
CA_[2A]-5A-[30A]-66A-66A	LTE B30	5	27710	2310	QPSK	1	24	9820	2355	4x4	LTE B2	20	900	1960	4x4	LTE B5	10	2525	881.5	2x2	LTE B66	20	66786	2145	2x2	LTE B66	20	67236	2190	2x2	22.55	22.55
CA_[2A]-5A-[30A]-[66A]-66A	LTE B30	5	27710	2310	QPSK	1	24	9820	2355	4x4	LTE B2	20	900	1960	4x4	LTE B5	10	2525	881.5	2x2	LTE B66	20	66786	2145	4x4	LTE B66	20	67236	2190	2x2	22.60	22.55
CA_[2A]-5A-[30A]-[66A]-[66A]	LTE B30	5	27710	2310	QPSK	1	24	9820	2355	4x4	LTE B2	20	900	1960	4x4	LTE B5	10	2525	881.5	2x2	LTE B66	20	66786	2145	4x4	LTE B66	20	67236	2190	4x4	22.54	22.55
CA_2A-12A-30A-[66A]-66A	LTE B30	5	27710	2310	QPSK	1	24	9820	2355	2x2	LTE B2	20	900	1960	2x2	LTE B12	10	5095	737.5	2x2	LTE B66	20	66786	2145	4x4	LTE B66	20	67236	2190	2x2	22.26	22.55
CA_2A-12A-30A-[66A]-[66A]	LTE B30	5	27710	2310	QPSK	1	24	9820	2355	2x2	LTE B2	20	900	1960	2x2	LTE B12	10	5095	737.5	2x2	LTE B66	20	66786	2145	4x4	LTE B66	20	67236	2190	4x4	22.57	22.55
CA_2A-12A-[30A]-66A-66A	LTE B30	5	27710	2310	QPSK	1	24	9820	2355	4x4	LTE B2	20	900	1960	2x2	LTE B12	10	5095	737.5	2x2	LTE B66	20	66786	2145	2x2	LTE B66	20	67236	2190	2x2	22.58	22.55
CA_2A-12A-[30A]-[66A]-66A	LTE B30	5	27710	2310	QPSK	1	24	9820	2355	4x4	LTE B2	20	900	1960	2x2	LTE B12	10	5095	737.5	2x2	LTE B66	20	66786	2145	4x4	LTE B66	20	67236	2190	2x2	22.53	22.55
CA_2A-12A-[30A]-[66A]-[66A]	LTE B30	5	27710	2310	QPSK	1	24	9820	2355	4x4	LTE B2	20	900	1960	2x2	LTE B12	10	5095	737.5	2x2	LTE B66	20	66786	2145	4x4	LTE B66	20	67236	2190	4x4	22.50	22.55
CA_[2A]-12A-30A-66A-66A	LTE B30	5	27710	2310	QPSK	1	24	9820	2355	2x2	LTE B2	20	900	1960	4x4	LTE B12	10	5095	737.5	2x2	LTE B66	20	66786	2145	2x2	LTE B66	20	67236	2190	2x2	22.59	22.55
CA_[2A]-12A-30A-[66A]-66A	LTE B30	5	27710	2310	QPSK	1	24	9820	2355	2x2	LTE B2	20	900	1960	4x4	LTE B12	10	5095	737.5	2x2	LTE B66	20	66786	2145	4x4	LTE B66	20	67236	2190	2x2	22.58	22.55
CA_[2A]-12A-30A-[66A]-[66A]	LTE B30	5	27710	2310	QPSK	1	24	9820	2355	2x2	LTE B2	20	900	1960	4x4	LTE B12	10	5095	737.5	2x2	LTE B66	20	66786	2145	4x4	LTE B66	20	67236	2190	4x4	22.51	22.55
CA_[2A]-12A-[30A]-66A-66A	LTE B30	5	27710	2310	QPSK	1	24	9820	2355	4x4	LTE B2	20	900	1960	4x4	LTE B12	10	5095	737.5	2x2	LTE B66	20	66786	2145	2x2	LTE B66	20	67236	2190	2x2	22.52	22.55
CA_[2A]-12A-[30A]-[66A]-66A	LTE B30	5	27710	2310	QPSK	1	24	9820	2355	4x4	LTE B2	20	900	1960	4x4	LTE B12	10	5095	737.5	2x2	LTE B66	20	66786	2145	4x4	LTE B66	20	67236	2190	2x2	22.49	22.55
CA_[2A]-12A-[30A]-[66A]-[66A]	LTE B30	5	27710	2310	QPSK	1	24	9820	2355	4x4	LTE B2	20	900	1960	4x4	LTE B12	10	5095	737.5	2x2	LTE B66	20	66786	2145	4x4	LTE B66	20	67236	2190	4x4	22.54	22.55
CA_2A-14A-30A-[66A]-66A	LTE B30	5	27710	2310	QPSK	1	24	9820	2355	2x2	LTE B2	20	900	1960	2x2	LTE B14	10	5330	763	2x2	LTE B66	20	66786	2145	4x4	LTE B66	20	67236	2190	2x2	22.52	22.55
CA_2A-14A-30A-[66A]-[66A]	LTE B30	5	27710	2310	QPSK	1	24	9820	2355	2x2	LTE B2	20	900	1960	2x2	LTE B14	10	5330	763	2x2	LTE B66	20	66786	2145	4x4	LTE B66	20	67236	2190	4x4	22.54	22.55
CA_2A-14A-[30A]-66A-66A	LTE B30	5	27710	2310	QPSK	1	24	9820	2355	4x4	LTE B2	20	900	1960	2x2	LTE B14	10	5330	763	2x2	LTE B66	20	66786	2145	2x2	LTE B66	20	67236	2190	2x2	22.61	22.55
CA_2A-14A-[30A]-[66A]-66A	LTE B30	5	27710	2310	QPSK	1	24	9820	2355	4x4	LTE B2	20	900	1960	2x2	LTE B14	10	5330	763	2x2	LTE B66	20	66786	2145	4x4	LTE B66	20	67236	2190	2x2	22.62	22.55
CA_2A-14A-[30A]-[66A]-[66A]	LTE B30	5	27710	2310	QPSK	1	24	9820	2355	4x4	LTE B2	20	900	1960	2x2	LTE B14	10	5330	763	2x2	LTE B66	20	66786	2145	4x4	LTE B66	20	67236	2190	4x4	22.65	22.55
CA_[2A]-14A-30A-66A-66A	LTE B30	5	27710	2310	QPSK	1	24	9820	2355	2x2	LTE B2	20	900	1960	4x4	LTE B14	10	5330	763	2x2	LTE B66	20	66786	2145	2x2	LTE B66	20	67236	2190	2x2	22.55	22.55
CA_[2A]-14A-30A-[66A]-66A	LTE B30	5	27710	2310	QPSK	1	24	9820	2355	2x2	LTE B2	20	900	1960	4x4	LTE B14	10	5330	763	2x2	LTE B66	20	66786	2145	4x4	LTE B66	20	67236	2190	2x2	22.56	22.55
CA_[2A]-14A-30A-[66A]-[66A]	LTE B30	5	27710	2310	QPSK	1	24	9820	2355	2x2	LTE B2	20	900	1960	4x4	LTE B14	10	5330	763	2x2	LTE B66	20	66786	2145	4x4	LTE B66	20	67236	2190	4x4	22.55	22.55
CA_[2A]-14A-[30A]-66A-66A	LTE B30	5	27710	2310	QPSK	1	24	9820	2355	4x4	LTE B2	20	900	1960	4x4	LTE B14	10	5330	763	2x2	LTE B66	20	66786	2145	2x2	LTE B66	20	67236	2190	2x2	22.61	22.55
CA_[2A]-14A-[30A]-[66A]-66A	LTE B30	5	27710	2310	QPSK	1	24	9820	2355	4x4	LTE B2	20	900	1960	4x4	LTE B14	10	5330	763	2x2	LTE B66	20	66786	2145	4x4	LTE B66	20	67236	2190	2x2	22.72	22.55
CA_[2A]-14A-[30A]-[66A]-[66A]	LTE B30	5	27710	2310	QPSK	1	24	9820	2355	4x4	LTE B2	20	900	1960	4x4	LTE B14	10	5330	763	2x2	LTE B66	20	66786	2145	4x4	LTE B66	20	67236	2190	4x4	22.62	22.55

I.3.8 LTE Band 41 as PCC

Table I-20
Maximum Output Powers

	PCC										SCC 1					SCC 2					Power	
Combination	PCC Band	PCC BW [MHz]	PCC (UL) Ch.	PCC (UL) Freq. [MHz]	Mod.	PCC UL# RB	PCC UL RB Offset	PCC (DL) Ch.	PCC (DL) Freq. [MHz]	DL Ant. Config.	SCC Band	SCC BW [MHz]	SCC (DL) Ch.	SCC (DL) Freq. [MHz]	DL Ant. Config.	SCC Band	SCC BW [MHz]	SCC (DL) Ch.	SCC (DL) Freq. [MHz]	DL Ant. Config.	LTE Tx.Power with DL CA Enabled (dBm)	LTE Single Carrier Tx Power (dBm)
CA_[41A]-41A (1)	LTE B41	20	41490	2680	QPSK	1	50	41490	2680	4x4	LTE B41	20	39750	2506	2x2	-	-	-	-	-	24.14	24.17
CA_41A-[41A] (1)	LTE B41	20	41490	2680	QPSK	1	50	41490	2680	2x2	LTE B41	20	39750	2506	4x4	-	-	-	-	-	24.13	24.17
CA_[41A]-[41A] (1)	LTE B41	20	41490	2680	QPSK	1	50	41490	2680	4x4	LTE B41	20	39750	2506	4x4	-	-	-	-	-	24.16	24.17
CA_41A-[41C]	LTE B41	20	41490	2680	QPSK	1	50	41490	2680	2x2	LTE B41	20	39948	2525.8	4x4	LTE B41	20	39750	2506	4x4	24.17	24.17
CA_[41C]-41A	LTE B41	20	41490	2680	QPSK	1	50	41490	2680	4x4	LTE B41	20	41292	2660.2	4x4	LTE B41	20	39750	2506	2x2	24.16	24.17
CA_[41A]-41C	LTE B41	20	41490	2680	QPSK	1	50	41490	2680	4x4	LTE B41	20	39948	2525.8	2x2	LTE B41	20	39750	2506	2x2	24.16	24.17
CA_41C-[41A]	LTE B41	20	41490	2680	QPSK	1	50	41490	2680	2x2	LTE B41	20	41292	2660.2	2x2	LTE B41	20	39750	2506	4x4	24.18	24.17
CA_[41A]-[41C]	LTE B41	20	41490	2680	QPSK	1	50	41490	2680	4x4	LTE B41	20	39948	2525.8	4x4	LTE B41	20	39750	2506	4x4	24.22	24.17
CA_[41C]-[41A]	LTE B41	20	41490	2680	QPSK	1	50	41490	2680	4x4	LTE B41	20	41292	2660.2	4x4	LTE B41	20	39750	2506	4x4	24.19	24.17
CA_[41D]	LTE B41	20	41490	2680	QPSK	1	50	41490	2680	4x4	LTE B41	20	41292	2660.2	4x4	LTE B41	20	41094	2640.4	4x4	24.20	24.17

I.3.9 LTE Band 48 as PCC

Table I-21
Maximum Output Powers

	PCC										SCC 1					SCC 2					SCC 3					SCC 4					Power	
Combination	PCC Band	PCC BW [MHz]	PCC (UL) Ch.	PCC (UL) Freq. [MHz]	Mod.	PCC UL# RB	PCC UL RB Offset	PCC (DL) Ch.	PCC (DL) Freq. [MHz]	DL Ant. Config.	SCC Band	SCC BW [MHz]	SCC (DL) Ch.	SCC (DL) Freq. [MHz]	DL Ant. Config.	SCC Band	SCC BW [MHz]	SCC (DL) Ch.	SCC (DL) Freq. [MHz]	DL Ant. Config.	SCC Band	SCC BW [MHz]	SCC (DL) Ch.	SCC (DL) Freq. [MHz]	DL Ant. Config.	SCC Band	SCC BW [MHz]	SCC (DL) Ch.	SCC (DL) Freq. [MHz]	DL Ant. Config.	LTE Tx.Power with DL CA Enabled (dBm)	LTE Single Carrier Tx Power (dBm)
CA_48A-[48A]	LTE B48	20	55340	3560	QPSK	1	0	55340	3560	2x2	LTE B48	20	56640	3690	4x4	-	-	-	-	-	-	-	-	-	-	-	-	-	-	-	21.90	22.08
CA_[48A]-48A	LTE B48	20	55340	3560	QPSK	1	0	55340	3560	4x4	LTE B48	20	56640	3690	2x2	-	-	-	-	-	-	-	-	-	-	-	-	-	-	-	21.94	22.08
CA_[48A]-[48A]	LTE B48	20	55340	3560	QPSK	1	0	55340	3560	4x4	LTE B48	20	56640	3690	4x4	-	-	-	-	-	-	-	-	-	-	-	-	-	-	-	21.80	22.08
CA_[48B]	LTE B48	15	55765	3602.5	QPSK	1	74	55765	3602.5	4x4	LTE B48	5	55858	3611.8	4x4	-	-	-	-	-	-	-	-	-	-	-	-	-	-	-	22.03	22.05
CA_48A-[48C]	LTE B48	20	55340	3560	QPSK	1	0	55340	3560	2x2	LTE B48	20	56640	3690	4x4	LTE B48	20	56442	3670.2	4x4	-	-	-	-	-	-	-	-	-	-	21.92	22.08
CA_[48C]-48A	LTE B48	20	55340	3560	QPSK	1	0	55340	3560	4x4	LTE B48	20	55538	3579.8	4x4	LTE B48	20	56640	3690	2x2	-	-	-	-	-	-	-	-	-	-	22.12	22.08
CA_[48A]-48C	LTE B48	20	55340	3560	QPSK	1	0	55340	3560	4x4	LTE B48	20	56640	3690	2x2	LTE B48	20	56442	3670.2	2x2	-	-	-	-	-	-	-	-	-	-	22.04	22.08
CA_48C-[48A]	LTE B48	20	55340	3560	QPSK	1	0	55340	3560	2x2	LTE B48	20	55538	3579.8	2x2	LTE B48	20	56640	3690	4x4	-	-	-	-	-	-	-	-	-	-	21.93	22.08
CA_[48A]-[48C]	LTE B48	20	55340	3560	QPSK	1	0	55340	3560	4x4	LTE B48	20	56640	3690	4x4	LTE B48	20	56442	3670.2	4x4	-	-	-	-	-	-	-	-	-	-	22.11	22.08
CA_[48C]-[48A]	LTE B48	20	55340	3560	QPSK	1	0	55340	3560	4x4	LTE B48	20	55538	3579.8	4x4	LTE B48	20	56640	3690	4x4	-	-	-	-	-	-	-	-	-	-	22.08	22.08
CA_48A-[48D]	LTE B48	20	55340	3560	QPSK	1	0	55340	3560	2x2	LTE B48	20	56640	3690	4x4	LTE B48	20	56442	3670.2	4x4	LTE B48	20	56244	3650.4	4x4	-	-	-	-	-	21.85	22.08
CA_[48D]-48A	LTE B48	20	55340	3560	QPSK	1	0	55340	3560	4x4	LTE B48	20	55538	3579.8	4x4	LTE B48	20	55736	3599.6	4x4	LTE B48	20	56640	3690	2x2	-	-	-	-	-	22.11	22.08
CA_[48A]-48D	LTE B48	20	55340	3560	QPSK	1	0	55340	3560	4x4	LTE B48	20	56640	3690	2x2	LTE B48	20	56442	3670.2	2x2	LTE B48	20	56244	3650.4	2x2	-	-	-	-	-	22.03	22.08
CA_48D-[48A]	LTE B48	20	55340	3560	QPSK	1	0	55340	3560	2x2	LTE B48	20	55538	3579.8	2x2	LTE B48	20	55736	3599.6	2x2	LTE B48	20	56640	3690	4x4	-	-	-	-	-	21.86	22.08
CA_[48A]-[48D]	LTE B48	20	55340	3560	QPSK	1	0	55340	3560	4x4	LTE B48	20	56640	3690	4x4	LTE B48	20	56442	3670.2	4x4	LTE B48	20	56244	3650.4	4x4	-	-	-	-	-	22.06	22.08
CA_[48D]-[48A]	LTE B48	20	55340	3560	QPSK	1	0	55340	3560	4x4	LTE B48	20	55538	3579.8	4x4	LTE B48	20	55736	3599.6	4x4	LTE B48	20	56640	3690	4x4	-	-	-	-	-	22.08	22.08
CA_48C-[48C]	LTE B48	20	55340	3560	QPSK	1	0	55340	3560	2x2	LTE B48	20	55538	3579.8	2x2	LTE B48	20	56640	3690	4x4	LTE B48	20	56442	3670.2	4x4	-	-	-	-	-	21.81	22.08
CA_[48C]-48C	LTE B48	20	55340	3560	QPSK	1	0	55340	3560	4x4	LTE B48	20	55538	3579.8	4x4	LTE B48	20	56640	3690	2x2	LTE B48	20	56442	3670.2	2x2	-	-	-	-	-	22.05	22.08
CA_[48C]-[48C]	LTE B48	20	55340	3560	QPSK	1	0	55340	3560	4x4	LTE B48	20	55538	3579.8	4x4	LTE B48	20	56640	3690	4x4	LTE B48	20	56442	3670.2	4x4	-	-	-	-	-	22.02	22.08
CA_48A-[48E]	LTE B48	20	55340	3560	QPSK	1	0	55340	3560	2x2	LTE B48	20	56640	3690	4x4	LTE B48	20	56442	3670.2	4x4	LTE B48	20	56244	3650.4	4x4	LTE B48	20	56046	3630.6	4x4	21.79	22.08
CA_[48E]-48A	LTE B48	20	55340	3560	QPSK	1	0	55340	3560	4x4	LTE B48	20	55538	3579.8	4x4	LTE B48	20	55736	3599.6	4x4	LTE B48	20	55934	3619.4	4x4	LTE B48	20	56640	3690	2x2	22.07	22.08
CA_[48A]-48E	LTE B48	20	55340	3560	QPSK	1	0	55340	3560	4x4	LTE B48	20	56640	3690	2x2	LTE B48	20	56442	3670.2	2x2	LTE B48	20	56244	3650.4	2x2	LTE B48	20	56046	3630.6	2x2	22.06	22.08
CA_48E-[48A]	LTE B48	20	55340	3560	QPSK	1	0	55340	3560	2x2	LTE B48	20	55538	3579.8	2x2	LTE B48	20	55736	3599.6	2x2	LTE B48	20	55934	3619.4	2x2	LTE B48	20	56640	3690	4x4	21.82	22.08
CA_[48A]-[48E]	LTE B48	20	55340	3560	QPSK	1	0	55340	3560	4x4	LTE B48	20	56640	3690	4x4	LTE B48	20	56442	3670.2	4x4	LTE B48	20	56244	3650.4	4x4	LTE B48	20	56046	3630.6	4x4	22.02	22.08
CA_[48E]-[48A]	LTE B48	20	55340	3560	QPSK	1	0	55340	3560	4x4	LTE B48	20	55538	3579.8	4x4	LTE B48	20	55736	3599.6	4x4	LTE B48	20	55934	3619.4	4x4	LTE B48	20	56640	3690	4x4	22.10	22.08
CA_48C-[48D]	LTE B48	20	55340	3560	QPSK	1	0	55340	3560	2x2	LTE B48	20	55538	3579.8	2x2	LTE B48	20	56640	3690	4x4	LTE B48	20	56442	3670.2	4x4	LTE B48	20	56244	3650.4	4x4	21.94	22.08
CA_[48D]-48C	LTE B48	20	55340	3560	QPSK	1	0	55340	3560	4x4	LTE B48	20	55538	3579.8	4x4	LTE B48	20	55736	3599.6	4x4	LTE B48	20	56640	3690	2x2	LTE B48	20	56442	3670.2	2x2	22.08	22.08
CA_[48C]-48D	LTE B48	20	55340	3560	QPSK	1	0	55340	3560	4x4	LTE B48	20	55538	3579.8	4x4	LTE B48	20	56640	3690	2x2	LTE B48	20	56442	3670.2	2x2	LTE B48	20	56244	3650.4	2x2	22.09	22.08
CA_48D-[48C]	LTE B48	20	55340	3560	QPSK	1	0	55340	3560	2x2	LTE B48	20	55538	3579.8	2x2	LTE B48	20	55736	3599.6	2x2	LTE B48	20	56640	3690	4x4	LTE B48	20	56442	3670.2	4x4	21.83	22.08
CA_[48C]-[48D]	LTE B48	20	55340	3560	QPSK	1	0	55340	3560	4x4	LTE B48	20	55538	3579.8	4x4	LTE B48	20	56640	3690	4x4	LTE B48	20	56442	3670.2	4x4	LTE B48	20	56244	3650.4	4x4	22.04	22.08
CA_[48D]-[48C]	LTE B48	20	55340	3560	QPSK	1	0	55340	3560	4x4	LTE B48	20	55538	3579.8	4x4	LTE B48	20	55736	3599.6	4x4	LTE B48	20	56640	3690	4x4	LTE B48	20	56442	3670.2	4x4	22.09	22.08

I.4 Additional Downlink Carrier Aggregation with Uplink Carrier Aggregation Enabled

This device supports uplink carrier aggregation (ULCA) with additional Carrier Aggregation configurations active in the downlink. Power measurements were performed with ULCA active and additional CA configurations active in the downlink for the configuration per Fall 2017 TCB Workshop Notes.

Per FCC Guidance, additional SAR measurements for these configurations were not required since their maximum output power was not more than 0.25 dB higher than the maximum output power for with only CA_66B, CA_66C, CA_41C, or CA_48C ULCA active.

I.4.1 Additional DL Carrier Aggregation RF Conducted Powers with Uplink Carrier Aggregation Enabled

Table I-22
Maximum Output Powers

	PCC									SCC 1									SCC 2				Power	
Combination	PCC Band	PCC BW [MHz]	PCC (UL) Ch.	PCC (UL) Freq. [MHz]	Mod.	PCC UL# RB	PCC UL RB Offset	PCC (DL) Channel	PCC (DL) Freq. [MHz]	SCC Band	SCC BW [MHz]	SCC (UL) Ch.	SCC (UL) Freq. [MHz]	Mod.	SCC UL# RB	SCC UL RB Offset	SCC (DL) Channel	SCC (DL) Freq. [MHz]	SCC Band	SCC BW [MHz]	SCC (DL) Channel	SCC (DL) Freq. [MHz]	ULCA Tx.Power with add'l CA config. active (dBm)	ULCA Tx Power (dBm)
CA_41D	LTE B41	20	41490	2680	QPSK	1	0	41490	2680	LTE B41	20	41292	2660.2	QPSK	1	99	41292	2660.2	LTE B41	20	41094	2640.4	24.10	24.09

I.4.2 Additional 4x4 MIMO DL Carrier Aggregation RF Conducted Powers with Uplink Carrier Aggregation Enabled

Note: 4x4 DL MIMO is only operating in the downlink. Uplink transmission is limited to a single output stream for each component carrier of ULCA.

Table I-23
Maximum Output Powers

	PCC										SCC 1										SCC 2					Power	
Combination	PCC Band	PCC BW [MHz]	PCC (UL) Ch.	PCC (UL) Freq. [MHz]	Mod.	PCC UL# RB	PCC UL RB Offset	PCC (DL) Ch.	PCC (DL) Freq. [MHz]	DL Ant. Config.	SCC Band	SCC BW [MHz]	SCC (UL) Ch.	SCC (UL) Freq. [MHz]	Mod.	SCC UL# RB	SCC UL RB Offset	SCC (DL) Ch.	SCC (DL) Freq. [MHz]	DL Ant. Config.	SCC Band	SCC BW [MHz]	SCC (DL) Ch.	SCC (DL) Freq. [MHz]	DL Ant. Config.	ULCA Tx.Power with add'l CA config. active (dBm)	ULCA Tx Power (dBm)
CA_[41D]	LTE B41	20	41490	2680	QPSK	1	0	41490	2680	4x4	LTE B41	20	41292	2660.2	QPSK	1	99	41292	2660.2	4x4	LTE B41	20	41094	2640.4	4x4	24.14	24.09