APPENDIX J: LTE DOWNLINK ONLY CARRIER AGGREGATION TEST REDUCTION METHODOLOGY

SAR test exclusion for LTE downlink Carrier Aggregation is determined by power measurements according to the number of component carriers (CCs) supported by the product implementation. Per April 2018 TCBC Workshop Notes, the following test reduction methodology was applied to determine the combinations required for conducted power measurements.

LTE DLCA Test Reduction Methodology:

- The supported combinations were arranged by the number of component carriers in columns.
- Any limitations on the PCC or SCC for each combination were identified alongside the combination (e.g. CA_2A-2A-4A-12A, but B12 can only be configured as a SCC).
- Power measurements were performed for "supersets" (LTE CA combinations with multiple components carriers) and any "subsets" (LTE CA combinations with fewer component carriers) that were not completely covered by the supersets.
- Only subsets that have the exact same components as a superset were excluded for measurement.
- When there were certain restrictions on component carriers that existed in the superset that were not applied for the subset, the subset configuration was additionally evaluated.
- Both inter-band and intra-band downlink carrier aggregation scenarios were considered.
- Downlink CA combinations for SISO and 4x4 Downlink MIMO operations were measured independently, per May 2017 TCBC Workshop notes.

Table J-1 – Example of Exclusion Table for SISO Configurations

Index	2CC	Supported Channel Bandwidth [MHz]		Restriction	Completely Covered by Measurement Superset
		CC1	CC2		
2CC #1	CA_2C	5, 10, 15, 20	5, 10, 15, 20		3CC #4
2CC #2	CA_2A-5A	5, 10, 15, 20	5, 10		4CC #1
2CC #3	CA_2A-12A	5, 10, 15, 20	5, 10		3CC #3
2CC #4	CA_2A-13A	5, 10, 15, 20	10		3CC #9
2CC #5	CA_2A-17A	5, 10	5, 10		N/A
2CC #6	CA_2A-30A	5, 10, 15, 20	5, 10		3CC #14
2CC #7	CA_2A-66A (2)	5, 10, 15, 20	5, 10, 15, 20		3CC #1
2CC #9	CA_2A-71A	5, 10, 15, 20	5, 10, 15, 20		3CC #10
2CC #10	CA_4A-4A	5, 10, 15, 20	5, 10, 15, 20		3CC #8
2CC #11	CA_4A-5A (1)	5, 10, 15, 20	5, 10		4CC #1
2CC #12	CA_4A-12A (4)	5, 10, 15, 20	5, 10		3CC #8
2CC #13	CA_4A-13A	5, 10, 15, 20	10		3CC #9
2CC #14	CA_4A-17A	5, 10	5, 10	B17 SCC Only	No
2CC #15	CA_2B	5, 10	5, 10		3CC #1
2CC #16	CA_5A-29A	5, 10	5, 10, 15, 20		No
2CC #17	CA_7C	15, 20	15, 20		No
2CC #18	CA_7A-7A (1)	5, 10, 15, 20	5, 10, 15, 20		No
2CC #19	CA_7A-12A	5, 10, 15, 20	5, 10		3CC #12
2CC #20	CA_12B	5	5, 10		3CC #13
2CC #21	CA_12A-25A	5, 10	5, 10, 15, 20		No
2CC #22	CA_12A-30A	5, 10	5, 10		3CC #14
2CC #23	CA_41A-41A (5)	5, 10, 15, 20	5, 10, 15, 20		No

Index	3CC	Supported Channel Bandwidth [MHz]			Restriction	Completely Covered by Measurement Superset
		CC1	CC2	CC3		
3CC #1	CA_2A-2A-4A	5, 10, 15, 20	5, 10, 15, 20	5, 10, 15, 20		4CC #1
3CC #2	CA_2A-2A-5A	5, 10, 15, 20	5, 10, 15, 20	5, 10, 15, 20		4CC #1
3CC #3	CA_2A-2A-12A	5, 10, 15, 20	5, 10, 15, 20	5, 10		No
3CC #4	CA_2C-66A	5, 10, 15, 20	5, 10, 15, 20	5, 10, 15, 20		No
3CC #5	CA_2A-2A-71A	5, 10, 15, 20	5, 10, 15, 20	5, 10, 15, 20		No
3CC #6	CA_2A-4A-4A	5, 10, 15, 20	5, 10, 15, 20	5, 10, 15, 20		No
3CC #7	CA_2A-4A-5A	5, 10, 15, 20	5, 10, 15, 20	5, 10, 15, 20		4CC #1
3CC #8	CA_2A-4A-12A	5, 10, 15, 20	5, 10, 15, 20	5, 10		No
3CC #9	CA_2A-4A-13A	5, 10, 15, 20	5, 10, 15, 20	10		No
3CC #10	CA_2A-4A-71A	5, 10, 15, 20	5, 10, 15, 20	5, 10, 15, 20		No
3CC #11	CA_2A-5A	5, 10, 15, 20	5, 10	5, 10		4CC #1
3CC #12	CA_2A-7A-12A	5, 10, 15, 20	5, 10, 15, 20	5, 10		No
3CC #13	CA_2A-12B	5, 10, 15, 20	5	5, 10		No
3CC #14	CA_2A-12A-30A	5, 10, 15, 20	5, 10	5, 10		No
3CC #15	CA_4A-4A-5A	5, 10, 15, 20	5, 10, 15, 20	5, 10		No
3CC #16	CA_5B-30A	5, 10	5, 10	5, 10		3CC #1
3CC #17	CA_5B-66A	5, 10	5, 10	5, 10, 15, 20		3CC #1
3CC #18	CA_5A-30A-66A	5, 10	5, 10	5, 10, 15, 20		3CC #1
3CC #19	CA_12A-66C	5, 10	5, 10, 15, 20	5, 10, 15, 20		No
3CC #20	CA_30A-66A-66A	5, 10	5, 10, 15, 20	5, 10, 15, 20		3CC #9
3CC #21	CA_4B	10, 15, 20	10, 15, 20	10, 15, 20		No
3CC #22	CA_41A-41C	5, 10, 15, 20	5, 10, 15, 20	5, 10, 15, 20		No
3CC #23	CA_66D	5, 10, 15, 20	5, 10, 15, 20	5, 10, 15, 20		No
3CC #24	CA_66A-66C	5, 10, 15, 20	5, 10, 15, 20	5, 10, 15, 20		No

Index	4CC	Supported Channel Bandwidth [MHz]				Restriction	Completely Covered by Measurement Superset
		CC1	CC2	CC3	CC4		
4CC #1	CA_2A-2A-4A-5A	5, 10, 15, 20	5, 10, 15, 20	5, 10, 15, 20	5, 10		No
4CC #2	CA_2A-2A-4A-12A	5, 10, 15, 20	5, 10, 15, 20	5, 10, 15, 20	5, 10	B12 SCC Only	No
4CC #3	CA_2A-2A-5A-30A	5, 10, 15, 20	5, 10, 15, 20	5, 10	5, 10		No
4CC #4	CA_2A-2A-5A-66A	5, 10, 15, 20	5, 10, 15, 20	5, 10	5, 10, 15, 20		No
4CC #5	CA_2A-5B-30A	5, 10, 15, 20	5, 10	5, 10	5, 10		3CC #1
4CC #6	CA_2A-5B-66A	5, 10, 15, 20	5, 10	5, 10	5, 10, 15, 20		3CC #1
4CC #7	CA_5B-30A-66A	5, 10	5, 10	5, 10, 15, 20	5, 10		3CC #1
4CC #8	CA_5B-66A-66A	5, 10	5, 10	5, 10, 15, 20	5, 10, 15, 20		3CC #2
4CC #9	CA_5A-30A-66A-66A	5, 10	5, 10	5, 10, 15, 20	5, 10, 15, 20		No
4CC #10	CA_41E	15, 20	15, 20	15, 20	20		No

Index	5CC	Supported Channel Bandwidth [MHz]					Restriction	Completely Covered by Measurement Superset
		CC1	CC2	CC3	CC4	CC5		
5CC #1	CA_2A-5B-30A-66A	5, 10, 15, 20	5, 10	5, 10	5, 10	5, 10, 15, 20		No
5CC #2	CA_2A-5B-66A-66A	5, 10, 15, 20	5, 10	5, 10	5, 10, 15, 20	5, 10, 15, 20		No

Table J-2 – Example of Exclusion Table for 4x4 Downlink MIMO Configurations

Index	2CC	Supported Channel Bandwidth [MHz]		Restriction	Completely Covered by Measurement Superset
		CC1	CC2		
2CC #M1	CA_[2C]	5, 10, 15, 20	5, 10, 15, 20		3CC #M6
2CC #M2	CA_[2A]-2A	5, 10, 15, 20	5, 10, 15, 20		3CC #M1
2CC #M3	CA_[2A]-[2A]	5, 10, 15, 20	5, 10, 15, 20		No
2CC #M4	CA_[2A]-4A (2)	5, 10, 15, 20	5, 10, 15, 20		3CC #M1
2CC #M5	CA_[2A]-[4A] (2)	5, 10, 15, 20	5, 10, 15, 20		No
2CC #M6	CA_[2A]-5A	5, 10, 15, 20	5, 10		4CC #M3
2CC #M7	CA_[2A]-12A (1)	5, 10, 15, 20	3, 5, 10		No
2CC #M8	CA_[2A]-13A	5, 10, 15, 20	10		3CC #M4
2CC #M9	CA_[2A]-17A	5, 10	5, 10		No
2CC #M10	CA_[2A]-29A (2)	5, 10, 15, 20	5, 10	B29 SCC Only	3CC #M12
2CC #M11	CA_[2A]-30A	5, 10, 15, 20	5, 10		3CC #M5
2CC #M12	CA_[2A]-66A (2)	5, 10, 15, 20	5, 10, 15, 20		4CC #M1
2CC #M13	CA_2A-[66A] (2)	5, 10, 15, 20	5, 10, 15, 20		4CC #M2
2CC #M14	CA_[2A]-[66A] (2)	5, 10, 15, 20	5, 10, 15, 20		No
2CC #M15	CA_[2A]-71A	5, 10, 15, 20	5, 10, 15, 20		3CC #M11
2CC #M16	CA_5A-[66A]	5, 10	5, 10, 15, 20		3CC #M16
2CC #M17	CA_12A-[66A] (4)	5, 10	5, 10, 15, 20		3CC #M17
2CC #M18	CA_13A-[66A]	5, 10	5, 10, 15, 20		3CC #M19
2CC #M19	CA_30A-[66A]	5, 10	5, 10, 15, 20		3CC #M20
2CC #M20	CA_[66B]	5, 10, 15	5, 10, 15		4CC #M4
2CC #M21	CA_[66C]	5, 10, 15, 20	5, 10, 15, 20		4CC #M6
2CC #M22	CA_[66A]-66A	5, 10, 15, 20	5, 10, 15, 20		3CC #M28
2CC #M23	CA_[66A]-[66A]	5, 10, 15, 20	5, 10, 15, 20		No

Index	3CC	Supported Channel Bandwidth [MHz]			Restriction	Completely Covered by Measurement Superset
		CC1	CC2	CC3		
3CC #M1	CA_[2A]-2A-4A	5, 10, 15, 20	5, 10, 15, 20	5, 10, 15, 20		No
3CC #M2	CA_[2A]-2A-5A	5, 10, 15, 20	5, 10, 15, 20	5, 10		No
3CC #M3	CA_[2A]-2A-12A	5, 10, 15, 20	5, 10, 15, 20	5, 10		No
3CC #M4	CA_[2A]-2A-13A	5, 10, 15, 20	5, 10, 15, 20	10		No
3CC #M5	CA_[2A]-2A-30A	5, 10, 15, 20	5, 10, 15, 20	5, 10		No
3CC #M6	CA_[2C]-66A	5, 10, 15, 20	5, 10, 15, 20	5, 10, 15, 20		No
3CC #M7	CA_2C-[66A]	5, 10, 15, 20	5, 10, 15, 20	5, 10, 15, 20		No
3CC #M8	CA_[2C]-[66A]	5, 10, 15, 20	5, 10, 15, 20	5, 10, 15, 20		No
3CC #M9	CA_[2A]-2A-66A	5, 10, 15, 20	5, 10, 15, 20	5, 10, 15, 20		No
3CC #M10	CA_2A-2A-[66A]	5, 10, 15, 20	5, 10, 15, 20	5, 10, 15, 20		No
3CC #M11	CA_[2A]-2A-71A	5, 10, 15, 20	5, 10, 15, 20	5, 10, 15, 20		No
3CC #M12	CA_[2A]-4A-29A	5, 10, 15, 20	5, 10, 15, 20	5, 10	B29 SCC Only	No
3CC #M13	CA_[2A]-4A-71A	5, 10, 15, 20	5, 10, 15, 20	5, 10, 15, 20		No
3CC #M14	CA_[2A]-5B	5, 10, 15, 20	5, 10	5, 10		4CC #M1
3CC #M15	CA_[2A]-5A-66A	5, 10, 15, 20	5, 10	5, 10, 15, 20		No
3CC #M16	CA_2A-5A-[66A]	5, 10, 15, 20	5, 10	5, 10, 15, 20		No
3CC #M17	CA_2A-12A-[66A]	5, 10, 15, 20	5, 10	5, 10, 15, 20		No
3CC #M18	CA_[2A]-13A-66A	5, 10, 15, 20	5, 10	5, 10, 15, 20		No
3CC #M19	CA_2A-13A-[66A]	5, 10, 15, 20	5, 10	5, 10, 15, 20		No
3CC #M20	CA_2A-30A-[66A]	5, 10, 15, 20	5, 10	5, 10, 15, 20		No
3CC #M21	CA_[2A]-66B	5, 10, 15, 20	5, 10, 15	5, 10, 15		4CC #M3
3CC #M22	CA_2A-[66B]	5, 10, 15, 20	5, 10, 15	5, 10, 15		4CC #M4
3CC #M23	CA_[2A]-[66B]	5, 10, 15, 20	5, 10, 15	5, 10, 15		No
3CC #M24	CA_[2A]-66C	5, 10, 15, 20	5, 10, 15, 20	5, 10, 15, 20		4CC #M5
3CC #M25	CA_2A-[66C]	5, 10, 15, 20	5, 10, 15, 20	5, 10, 15, 20		4CC #M6
3CC #M26	CA_[2A]-[66C]	5, 10, 15, 20	5, 10, 15, 20	5, 10, 15, 20		No
3CC #M27	CA_[2A]-66A-66A	5, 10, 15, 20	5, 10, 15, 20	5, 10, 15, 20		No
3CC #M28	CA_2A-[66A]-66A	5, 10, 15, 20	5, 10, 15, 20	5, 10, 15, 20		No
3CC #M29	CA_[2A]-66A-71A	5, 10, 15, 20	5, 10, 15, 20	5, 10, 15, 20		No

Index	4CC	Supported Channel Bandwidth [MHz]				Restriction	Completely Covered by Measurement Superset
		CC1	CC2	CC3	CC4		
4CC #M1	CA_[2A]-5B-66A	5, 10, 15, 20	5, 10	5, 10	5, 10, 15, 20		No
4CC #M2	CA_2A-5B-[66A]	5, 10, 15, 20	5, 10	5, 10	5, 10, 15, 20		No
4CC #M3	CA_[2A]-5A-66B	5, 10, 15, 20	5, 10	5, 10, 15	5, 10, 15		No
4CC #M4	CA_2A-5A-[66B]	5, 10, 15, 20	5, 10	5, 10, 15	5, 10, 15		No
4CC #M5	CA_[2A]-5A-66C	5, 10, 15, 20	5, 10	5, 10, 15, 20	5, 10, 15, 20		No
4CC #M6	CA_2A-5A-[66C]	5, 10, 15, 20	5, 10	5, 10, 15, 20	5, 10, 15, 20		No

Note: [CC] indicates component carrier with 4x4 DL MIMO antenna configuration

J.1 LTE Downlink Only Carrier Aggregation Test Selection and Setup

SAR test exclusion for LTE downlink Carrier Aggregation is determined by power measurements according to the number component carriers (CCs) supported by the product implementation. For those configurations required by April 2018 TCBC Workshop Notes, conducted power measurements with LTE Carrier Aggregation (CA) (downlink

© 2021 PCTEST

only) active are made in accordance to KDB Publication 941225 D05Av01r02. The RRC connection is only handled by one cell, the primary component carrier (PCC) for downlink and uplink communications. After making a data connection to the PCC, the UE device adds secondary component carrier(s) (SCC) on the downlink only. All uplink communications and acknowledgements remain identical to specifications when downlink carrier aggregation is inactive on the PCC. Additional conducted output powers are measured with the downlink carrier aggregation active for the configuration with highest measured maximum conducted power with downlink carrier aggregation inactive measured among the channel bandwidth, modulation, and RB combinations in each frequency band.

This device supports LAA with downlink carrier aggregation only. It uses carrier aggregation in the downlink to combine LTE in the unlicensed spectrum (i.e. LTE Band 46) with LTE in the licensed band (served as PCC). All uplink communications and acknowledgements on the PCC remain identical to specifications when downlink carrier aggregation is inactive.

Per FCC KDB Publication 941225 D05Av01r02, no SAR measurements are required for carrier aggregation configurations when the maximum average output power with downlink only carrier aggregation active is not more than 0.25 dB higher than the average output power with downlink only carrier aggregation inactive. All bands required for SAR testing per FCC KDB procedures were considered. Based on the measured maximum powers below, no additional SAR tests were required for DLCA SAR configurations.

General PCC and SCC configuration selection procedure

- PCC uplink channel, channel bandwidth, modulation and RB configurations were selected based on section C)3)b)ii) of KDB 941225 D05 V01r02. All LTE bandwidth conducted powers needed for PCC uplink configuration selection can be found in Section 9.3 and appendix I. The downlink PCC channel was paired with the selected PCC uplink channel according to normal configurations without carrier aggregation.
- To maximize aggregated bandwidth, highest channel bandwidth available for that CA combination was selected for SCC. For inter-band CA, the SCC downlink channels were selected near the middle of their transmission bands. For contiguous intra-band CA, the downlink channel spacing between the component carriers was set to multiple of 300 kHz less than the nominal channel spacing defined in section 5.4.1A of 3GPP TS 36.521. For non-contiguous intra-band CA, the downlink channel spacing between the component carriers was set to be larger than the nominal channel spacing and provided maximum separation between the component carriers.
- All selected PCC and SCC(s) remained fully within the uplink/downlink transmission band of the respective component carrier.

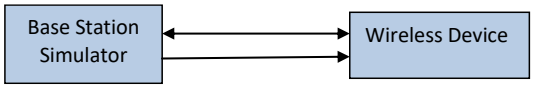

Figure J-1
DL CA Power Measurement Setup

© 2021 PCTEST

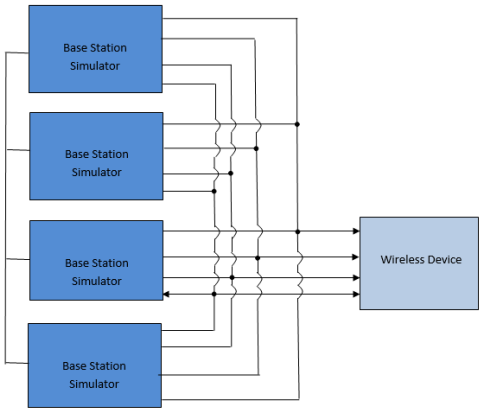

Figure J-2
DL CA with DL 4x4 MIMO Power Measurement Setup

J.2 Downlink Carrier Aggregation RF Conducted Powers

J.2.1 LTE Band 71 as PCC

Table J-3
Maximum Output Powers

	PCC									SCC 1				SCC 2				SCC 3				Power	
Combination	PCC Band	PCC BW [MHz]	PCC (UL) Ch.	PCC (UL) Freq. [MHz]	Mod.	PCC UL# RB	PCC UL RB Offset	PCC (DL) Channel	PCC (DL) Freq. [MHz]	SCC Band	SCC BW [MHz]	SCC (DL) Channel	SCC (DL) Freq. [MHz]	SCC Band	SCC BW [MHz]	SCC (DL) Channel	SCC (DL) Freq. [MHz]	SCC Band	SCC BW [MHz]	SCC (DL) Channel	SCC (DL) Freq. [MHz]	LTE Tx.Power with DL CA Enabled (dBm)	LTE Single Carrier Tx Power (dBm)
CA_4A-4A-71A	LTE B71	5	133447	695.5	QPSK	1	12	68911	649.5	LTE B4	20	2175	2132.5	LTE B4	10	2350	2150	-	-	-	-	24.89	24.79
CA_48A-48A-71A	LTE B71	5	133447	695.5	QPSK	1	12	68911	649.5	LTE B48	20	55990	3625	LTE B48	20	56640	3690	-	-	-	-	24.92	24.79
CA_48C-71A	LTE B71	5	133447	695.5	QPSK	1	12	68911	649.5	LTE B48	20	55990	3625	LTE B48	20	56188	3644.8	-	-	-	-	24.83	24.79
CA_2A-2A-4A-71A	LTE B71	5	133447	695.5	QPSK	1	12	68911	649.5	LTE B2	20	900	1960	LTE B2	20	700	1940	LTE B4	20	2175	2132.5	25.01	24.79
CA_2A-2A-66A-71A	LTE B71	5	133447	695.5	QPSK	1	12	68911	649.5	LTE B2	20	900	1960	LTE B2	20	700	1940	LTE B66	20	66786	2145	24.99	24.79
CA_2A-66A-66A-71A	LTE B71	5	133447	695.5	QPSK	1	12	68911	649.5	LTE B2	20	900	1960	LTE B66	20	66786	2145	LTE B66	20	67236	2190	24.97	24.79
CA_2A-66C-71A	LTE B71	5	133447	695.5	QPSK	1	12	68911	649.5	LTE B2	20	900	1960	LTE B66	20	66786	2145	LTE B66	20	66984	2164.8	24.98	24.79

J.2.2 LTE Band 12 as PCC

Table J-4
Maximum Output Powers

	PCC									SCC 1				SCC 2				SCC 3				SCC 4				Power	
Combination	PCC Band	PCC BW [MHz]	PCC (UL) Ch.	PCC (UL) Freq. [MHz]	Mod.	PCC UL# RB	PCC UL RB Offset	PCC (DL) Channel	PCC (DL) Freq. [MHz]	SCC Band	SCC BW [MHz]	SCC (DL) Channel	SCC (DL) Freq. [MHz]	SCC Band	SCC BW [MHz]	SCC (DL) Channel	SCC (DL) Freq. [MHz]	SCC Band	SCC BW [MHz]	SCC (DL) Channel	SCC (DL) Freq. [MHz]	SCC Band	SCC BW [MHz]	SCC (DL) Channel	SCC (DL) Freq. [MHz]	LTE Tx.Power with DL CA Enabled (dBm)	LTE Single Carrier Tx Power (dBm)
CA_2A-12A (1)	LTE B12	5	23155	713.5	QPSK	1	12	5155	743.5	LTE B2	20	900	1960	-	-	-	-	-	-	-	-	-	-	-	-	25.00	24.95
CA_4A-12A (1)	LTE B12	5	23155	713.5	QPSK	1	12	5155	743.5	LTE B4	20	2175	2132.5	-	-	-	-	-	-	-	-	-	-	-	-	25.02	24.95
CA_4A-12A (2)	LTE B12	5	23155	713.5	QPSK	1	12	5155	743.5	LTE B4	20	2175	2132.5	-	-	-	-	-	-	-	-	-	-	-	-	25.02	24.95
CA_12A-25A	LTE B12	5	23155	713.5	QPSK	1	12	5155	743.5	LTE B25	20	8365	1962.5	-	-	-	-	-	-	-	-	-	-	-	-	24.89	24.95
CA_12A-46A	LTE B12	5	23155	713.5	QPSK	1	12	5155	743.5	LTE B46	20	50665	5537.5	-	-	-	-	-	-	-	-	-	-	-	-	24.82	24.95
CA_12A-48A	LTE B12	5	23155	713.5	QPSK	1	12	5155	743.5	LTE B48	20	55990	3625	-	-	-	-	-	-	-	-	-	-	-	-	24.89	24.95
CA_12A-66A (1)	LTE B12	5	23155	713.5	QPSK	1	12	5155	743.5	LTE B66	20	66786	2145	-	-	-	-	-	-	-	-	-	-	-	-	25.02	24.95
CA_12A-66A (2)	LTE B12	5	23155	713.5	QPSK	1	12	5155	743.5	LTE B66	20	66786	2145	-	-	-	-	-	-	-	-	-	-	-	-	25.02	24.95
CA_12A-46C	LTE B12	5	23155	713.5	QPSK	1	12	5155	743.5	LTE B46	20	50665	5537.5	LTE B46	20	50467	5517.7	-	-	-	-	-	-	-	-	24.76	24.95
CA_12A-48C	LTE B12	5	23155	713.5	QPSK	1	12	5155	743.5	LTE B48	20	55990	3625	LTE B48	20	56188	3644.8	-	-	-	-	-	-	-	-	24.86	24.95
CA_2A-2A-4A-12A	LTE B12	5	23155	713.5	QPSK	1	12	5155	743.5	LTE B2	20	900	1960	LTE B2	20	700	1940	LTE B4	20	2175	2132.5	-	-	-	-	25.02	24.95
CA_2A-4A-4A-12A	LTE B12	5	23155	713.5	QPSK	1	12	5155	743.5	LTE B2	20	900	1960	LTE B4	20	2175	2132.5	LTE B4	10	2350	2150	-	-	-	-	25.06	24.95
CA_2A-4A-12B	LTE B12	5	23155	713.5	QPSK	1	12	5155	743.5	LTE B12	5	5107	738.7	LTE B2	20	900	1960	LTE B4	20	2175	2132.5	-	-	-	-	24.99	24.95
CA_2A-12A-66C	LTE B12	5	23155	713.5	QPSK	1	12	5155	743.5	LTE B2	20	900	1960	LTE B66	20	66786	2145	LTE B66	20	66984	2164.8	-	-	-	-	25.00	24.95
CA_4A-4A-12B	LTE B12	5	23155	713.5	QPSK	1	12	5155	743.5	LTE B12	5	5107	738.7	LTE B4	20	2175	2132.5	LTE B4	10	2350	2150	-	-	-	-	25.04	24.95
CA_12A-46D	LTE B12	5	23155	713.5	QPSK	1	12	5155	743.5	LTE B46	20	50665	5537.5	LTE B46	20	50467	5517.7	LTE B46	20	50863	5557.3	-	-	-	-	24.81	24.95
CA_2A-2A-12A-30A-66A	LTE B12	5	23155	713.5	QPSK	1	12	5155	743.5	LTE B2	20	900	1960	LTE B2	20	700	1940	LTE B30	10	9820	2355	LTE B66	20	66786	2145	25.09	24.95
CA_2A-2A-12A-66A-66A	LTE B12	5	23155	713.5	QPSK	1	12	5155	743.5	LTE B2	20	900	1960	LTE B2	20	700	1940	LTE B66	20	66786	2145	LTE B66	20	67236	2190	25.05	24.95
CA_2A-2A-12B-66A	LTE B12	5	23155	713.5	QPSK	1	12	5155	743.5	LTE B12	5	5107	738.7	LTE B2	20	900	1960	LTE B2	20	700	1940	LTE B66	20	66786	2145	25.12	24.95
CA_2A-12A-30A-66A-66A	LTE B12	5	23155	713.5	QPSK	1	12	5155	743.5	LTE B2	20	900	1960	LTE B30	10	9820	2355	LTE B66	20	66786	2145	LTE B66	20	67236	2190	25.08	24.95
CA_2A-12B-66A-66A	LTE B12	5	23155	713.5	QPSK	1	12	5155	743.5	LTE B12	5	5107	738.7	LTE B2	20	900	1960	LTE B66	20	66786	2145	LTE B66	20	67236	2190	25.10	24.95

© 2021 PCTEST

J.2.3 LTE Band 13 as PCC

Table J-5
Maximum Output Powers

	PCC									SCC 1					SCC 2					SCC 3					SCC 4					SCC 5					SCC 6				Power	
Combination	PCC Band	PCC BW [MHz]	PCC (UL) Ch.	PCC (UL) Freq. [MHz]	Mod.	PCC UL# RB	PCC UL RB Offset	PCC (DL) Channel	PCC (DL) Freq. [MHz]	SCC Band	SCC BW [MHz]	SCC (DL) Channel	SCC (DL) Freq. [MHz]	SCC Band	SCC BW [MHz]	SCC (DL) Channel	SCC (DL) Freq. [MHz]	SCC Band	SCC BW [MHz]	SCC (DL) Channel	SCC (DL) Freq. [MHz]	SCC Band	SCC BW [MHz]	SCC (DL) Channel	SCC (DL) Freq. [MHz]	SCC Band	SCC BW [MHz]	SCC (DL) Channel	SCC (DL) Freq. [MHz]	SCC Band	SCC BW [MHz]	SCC (DL) Channel	SCC (DL) Freq. [MHz]	SCC Band	SCC BW [MHz]	SCC (DL) Channel	SCC (DL) Freq. [MHz]	LTE Tx.Power with DL CA Enabled (dBm)	LTE Single Carrier Tx Power (dBm)
CA_2A-4A-13A	LTE B13	10	23230	782	QPSK	1	49	5230	751	LTE B2	20	900	1960	LTE B4	20	2175	2132.5	-	-	-	-	-	-	-	-	-	-	-	-	-	-	-	-	-	-	-	-	24.57	24.78
CA_4A-4A-13A	LTE B13	10	23230	782	QPSK	1	49	5230	751	LTE B4	20	2175	2132.5	LTE B4	10	2350	2150	-	-	-	-	-	-	-	-	-	-	-	-	-	-	-	-	-	-	-	-	24.39	24.78
CA_13A-46A-46A	LTE B13	10	23230	782	QPSK	1	49	5230	751	LTE B46	20	50665	5537.5	LTE B46	20	47090	5180	-	-	-	-	-	-	-	-	-	-	-	-	-	-	-	-	-	-	-	-	-	-
CA_2A-13A-66C	LTE B13	10	23230	782	QPSK	1	49	5230	751	LTE B2	20	900	1960	LTE B66	20	66786	2145	LTE B66	20	66984	2164.8	-	-	-	-	-	-	-	-	-	-	-	-	-	-	-	-	24.45	24.78
CA_13A-46A-66B	LTE B13	10	23230	782	QPSK	1	49	5230	751	LTE B46	20	55990	5625	LTE B66	15	66786	2145	LTE B66	5	66879	2154.3	-	-	-	-	-	-	-	-	-	-	-	-	-	-	-	-	24.43	24.78
CA_13A-46A-66C	LTE B13	10	23230	782	QPSK	1	49	5230	751	LTE B46	20	55990	5625	LTE B66	20	66786	2145	LTE B66	20	66984	2164.8	-	-	-	-	-	-	-	-	-	-	-	-	-	-	-	-	24.50	24.78
CA_2A-2A-13A-66A-66A	LTE B13	10	23230	782	QPSK	1	49	5230	751	LTE B2	20	900	1960	LTE B2	20	700	1940	LTE B66	20	66786	2145	LTE B66	20	67236	2190	-	-	-	-	-	-	-	-	-	-	-	-	24.44	24.78
CA_2A-2A-13A-66B	LTE B13	10	23230	782	QPSK	1	49	5230	751	LTE B2	20	900	1960	LTE B2	20	700	1940	LTE B66	15	66786	2145	LTE B66	5	66879	2154.3	-	-	-	-	-	-	-	-	-	-	-	-	24.47	24.78
CA_2A-13A-46A-66A-66A	LTE B13	10	23230	782	QPSK	1	49	5230	751	LTE B2	20	900	1960	LTE B46	20	50665	5537.5	LTE B66	20	66786	2145	LTE B66	20	67236	2190	-	-	-	-	-	-	-	-	-	-	-	-	24.40	24.78
CA_2A-13A-46A-46A-66A	LTE B13	10	23230	782	QPSK	1	49	5230	751	LTE B2	20	900	1960	LTE B48	20	55990	5625	LTE B48	20	56640	3690	LTE B66	20	66786	2145	-	-	-	-	-	-	-	-	-	-	-	-	24.53	24.78
CA_2A-13A-46A-46C	LTE B13	10	23230	782	QPSK	1	49	5230	751	LTE B2	20	900	1960	LTE B48	20	55990	5625	LTE B48	20	56640	3690	LTE B48	20	56442	3670.2	-	-	-	-	-	-	-	-	-	-	-	-	24.44	24.78
CA_2A-13A-46C-66A	LTE B13	10	23230	782	QPSK	1	49	5230	751	LTE B2	20	900	1960	LTE B48	20	55990	5625	LTE B48	20	56188	3644.8	LTE B48	20	66786	2145	-	-	-	-	-	-	-	-	-	-	-	-	24.46	24.78
CA_2A-13A-48D	LTE B13	10	23230	782	QPSK	1	49	5230	751	LTE B2	20	900	1960	LTE B48	20	55990	5625	LTE B48	20	56188	3644.8	LTE B48	20	56386	3664.6	-	-	-	-	-	-	-	-	-	-	-	-	24.45	24.78
CA_2A-13A-66A-66B	LTE B13	10	23230	782	QPSK	1	49	5230	751	LTE B2	20	900	1960	LTE B66	20	66786	2145	LTE B66	5	67168	2183.2	LTE B66	15	67261	2192.5	-	-	-	-	-	-	-	-	-	-	-	-	24.41	24.78
CA_13A-46A-48C-66A	LTE B13	10	23230	782	QPSK	1	49	5230	751	LTE B46	20	55990	5625	LTE B48	20	55340	3560	LTE B48	20	55538	3579.8	LTE B48	20	66786	2145	-	-	-	-	-	-	-	-	-	-	-	-	24.51	24.78
CA_13A-46A-48D	LTE B13	10	23230	782	QPSK	1	49	5230	751	LTE B46	20	55990	5625	LTE B48	20	55340	3560	LTE B48	20	55538	3579.8	LTE B48	20	55736	3599.6	-	-	-	-	-	-	-	-	-	-	-	-	24.76	24.78
CA_13A-48C-48C	LTE B13	10	23230	782	QPSK	1	49	5230	751	LTE B48	20	55990	5625	LTE B48	20	56188	3644.8	LTE B48	20	55340	3560	LTE B48	20	55538	3579.8	-	-	-	-	-	-	-	-	-	-	-	-	24.63	24.78
CA_13A-48D-66A	LTE B13	10	23230	782	QPSK	1	49	5230	751	LTE B48	20	55990	5625	LTE B48	20	56188	3644.8	LTE B48	20	56386	3664.6	LTE B66	20	66786	2145	-	-	-	-	-	-	-	-	-	-	-	-	24.47	24.78
CA_2A-13A-46C-66A-66A	LTE B13	10	23230	782	QPSK	1	49	5230	751	LTE B2	20	900	1960	LTE B46	20	50665	5537.5	LTE B46	20	50467	5517.7	LTE B66	20	66786	2145	LTE B66	20	67236	2190	-	-	-	-	-	-	-	-	24.44	24.78
CA_2A-13A-46E	LTE B13	10	23230	782	QPSK	1	49	5230	751	LTE B2	20	900	1960	LTE B46	20	50665	5537.5	LTE B46	20	50467	5517.7	LTE B46	20	50863	5557.3	LTE B46	20	51061	5577.1	-	-	-	-	-	-	-	-	24.52	24.78
CA_13A-46E-66A	LTE B13	10	23230	782	QPSK	1	49	5230	751	LTE B46	20	50665	5537.5	LTE B46	20	50467	5517.7	LTE B46	20	50863	5557.3	LTE B46	20	51061	5577.1	LTE B66	20	66786	2145	-	-	-	-	-	-	-	-	24.51	24.78
CA_13A-48E-66A	LTE B13	10	23230	782	QPSK	1	49	5230	751	LTE B48	20	55990	5625	LTE B48	20	56188	3644.8	LTE B48	20	56386	3664.6	LTE B48	20	55792	3605.2	LTE B66	20	66786	2145	-	-	-	-	-	-	-	-	24.80	24.78
CA_2A-13A-46D-66A-66A	LTE B13	10	23230	782	QPSK	1	49	5230	751	LTE B2	20	900	1960	LTE B46	20	50665	5537.5	LTE B46	20	50467	5517.7	LTE B46	20	50863	5557.3	LTE B66	20	66786	2145	LTE B66	20	67236	2190	-	-	-	-	24.72	24.78

J.2.4 LTE Band 14 as PCC

Table J-6
Maximum Output Powers

	PCC									SCC 1				SCC 2				SCC 3				SCC 4				Power	
Combination	PCC Band	PCC BW [MHz]	PCC (UL) Ch.	PCC (UL) Freq. [MHz]	Mod.	PCC UL# RB	PCC UL RB Offset	PCC (DL) Channel	PCC (DL) Freq. [MHz]	SCC Band	SCC BW [MHz]	SCC (DL) Channel	SCC (DL) Freq. [MHz]	SCC Band	SCC BW [MHz]	SCC (DL) Channel	SCC (DL) Freq. [MHz]	SCC Band	SCC BW [MHz]	SCC (DL) Channel	SCC (DL) Freq. [MHz]	SCC Band	SCC BW [MHz]	SCC (DL) Channel	SCC (DL) Freq. [MHz]	LTE Tx.Power with DL CA Enabled (dBm)	LTE Single Carrier Tx Power (dBm)
CA_2A-2A-14A-30A-66A	LTE B14	10	23330	793	QPSK	1	49	5330	763	LTE B2	20	900	1960	LTE B2	20	700	1940	LTE B30	10	9820	2355	LTE B66	20	66786	2145	24.90	25.08
CA_2A-2A-14A-66A-66A	LTE B14	10	23330	793	QPSK	1	49	5330	763	LTE B2	20	900	1960	LTE B2	20	700	1940	LTE B66	20	66786	2145	LTE B66	20	67236	2190	24.99	25.08
CA_2A-14A-30A-66A-66A	LTE B14	10	23330	793	QPSK	1	49	5330	763	LTE B2	20	900	1960	LTE B30	10	9820	2355	LTE B66	20	66786	2145	LTE B66	20	67236	2190	24.91	25.08

J.2.5 LTE Band 5 as PCC

Table J-7
Maximum Output Powers

	PCC									SCC 1				SCC 2				SCC 3				SCC 4				SCC 5				SCC 6				Power	
Combination	PCC Band	PCC BW [MHz]	PCC (UL) Ch.	PCC (UL) Freq. [MHz]	Mod.	PCC UL# RB	PCC UL RB Offset	PCC (DL) Channel	PCC (DL) Freq. [MHz]	SCC Band	SCC BW [MHz]	SCC (DL) Channel	SCC (DL) Freq. [MHz]	SCC Band	SCC BW [MHz]	SCC (DL) Channel	SCC (DL) Freq. [MHz]	SCC Band	SCC BW [MHz]	SCC (DL) Channel	SCC (DL) Freq. [MHz]	SCC Band	SCC BW [MHz]	SCC (DL) Channel	SCC (DL) Freq. [MHz]	SCC Band	SCC BW [MHz]	SCC (DL) Channel	SCC (DL) Freq. [MHz]	SCC Band	SCC BW [MHz]	SCC (DL) Channel	SCC (DL) Freq. [MHz]	LTE Tx.Power with DL CA Enabled (dBm)	LTE Single Carrier Tx Power (dBm)
CA_5A-5A (1)	LTE B5	3	20525	836.5	QPSK	1	7	2525	881.5	LTE B5	5	2625	891.5	-	-	-	-	-	-	-	-	-	-	-	-	-	-	-	-	-	-	-	-	24.92	24.95
CA_5A-25A	LTE B5	10	20525	836.5	QPSK	1	0	2525	881.5	LTE B25	20	8365	1962.5	-	-	-	-	-	-	-	-	-	-	-	-	-	-	-	-	-	-	-	-	25.09	25.04
CA_5A-66A (1)	LTE B5	10	20525	836.5	QPSK	1	0	2525	881.5	LTE B46	20	50665	5537.5	-	-	-	-	-	-	-	-	-	-	-	-	-	-	-	-	-	-	-	-	24.87	25.04
CA_5B (1)	LTE B5	3	20525	836.5	QPSK	1	7	2525	881.5	LTE B5	5	2496	877.6	-	-	-	-	-	-	-	-	-	-	-	-	-	-	-	-	-	-	-	-	25.03	24.95
CA_5A-46C (1)	LTE B5	10	20525	836.5	QPSK	1	0	2525	881.5	LTE B46	20	50665	5537.5	LTE B46	20	50467	5517.7	-	-	-	-	-	-	-	-	-	-	-	-	-	-	-	-	24.89	25.04
CA_5B-46A	LTE B5	10	20525	836.5	QPSK	1	0	2525	881.5	LTE B5	5	2463	874.3	LTE B46	20	50665	5537.5	-	-	-	-	-	-	-	-	-	-	-	-	-	-	-	-	24.85	25.04
CA_2A-2A-4A-5A	LTE B5	10	20525	836.5	QPSK	1	0	2525	881.5	LTE B2	20	900	1960	LTE B2	20	700	1940	LTE B4	20	2175	2132.5	-	-	-	-	-	-	-	-	-	-	-	-	25.24	25.04
CA_2A-4A-4A-5A	LTE B5	10	20525	836.5	QPSK	1	0	2525	881.5	LTE B2	20	900	1960	LTE B4	20	2175	2132.5	LTE B4	10	2350	2150	-	-	-	-	-	-	-	-	-	-	-	-	25.27	25.04
CA_2A-4A-5B	LTE B5	10	20525	836.5	QPSK	1	0	2525	881.5	LTE B5	5	2463	874.3	LTE B2	20	900	1960	LTE B4	20	2175	2132.5	-	-	-	-	-	-	-	-	-	-	-	-	25.18	25.04
CA_2A-5A-48A-66A	LTE B5	10	20525	836.5	QPSK	1	0	2525	881.5	LTE B2	20	900	1960	LTE B48	20	55990	5625	LTE B66	20	66786	2145	-	-	-	-	-	-	-	-	-	-	-	-	25.25	25.04
CA_4A-4A-5B	LTE B5	10	20525	836.5	QPSK	1	0	2525	881.5	LTE B5	5	2463	874.3	LTE B4	20	2175	2132.5	LTE B4	10	2350	2150	-	-	-	-	-	-	-	-	-	-	-	-	25.14	25.04
CA_5A-5A-66A-66A	LTE B5	10	20525	836.5	QPSK	1	0	2525	881.5	LTE B5	5	2425	871.5	LTE B66	20	66786	2145	LTE B66	20	67236	2190	-	-	-	-	-	-	-	-	-	-	-	-	25.23	25.04
CA_5A-5A-66B	LTE B5	10	20525	836.5	QPSK	1	0	2525	881.5	LTE B5	5	2425	871.5	LTE B66	15	66786	2145	LTE B66	5	66879	2154.3	-	-	-	-	-	-	-	-	-	-	-	-	25.21	25.04
CA_5A-5A-66C	LTE B5	10	20525	836.5	QPSK	1	0	2525	881.5	LTE B5	5	2425	871.5	LTE B66	20	66786	2145	LTE B66	20	66984	2164.8	-	-	-	-	-	-	-	-	-	-	-	-	25.25	25.04
CA_5A-46D (1)	LTE B5	10	20525	836.5	QPSK	1	0	2525	881.5	LTE B46	20	50665	5537.5	LTE B46	20	50467	5517.7	LTE B46	20	50863	5557.3	-	-	-	-	-	-	-	-	-	-	-	-	24.78	25.04
CA_5B-46E	LTE B5	10	20525	836.5	QPSK	1	0	2525	881.5	LTE B5	5	2463	874.3	LTE B46	20	50665	5537.5	LTE B46	20	50467	5517.7	-	-	-	-	-	-	-	-	-	-	-	-	24.70	25.04
CA_2A-2A-5A-30A-66A	LTE B5	10	20525	836.5	QPSK	1	0	2525	881.5	LTE B2	20	900	1960	LTE B2	20	700	1940	LTE B30	10	9820	2355	LTE B66	20	66786	2145	-	-	-	-	-	-	-	-	25.25	25.04
CA_2A-2A-5A-66A-66A	LTE B5	10	20525	836.5	QPSK	1	0	2525	881.5	LTE B2	20	900	1960	LTE B2	20	700	1940	LTE B66	20	66786	2145	LTE B66	20	67236	2190	-	-	-	-	-	-	-	-	25.28	25.04
CA_2A-2A-5A-66B	LTE B5	10	20525	836.5	QPSK	1	0	2525	881.5	LTE B2	20	900	1960	LTE B2	20	700	1940	LTE B66	15	66786	2145	LTE B66	5	66879	2154.3	-	-	-	-	-	-	-	-	25.25	25.04
CA_2A-2A-5A-66C	LTE B5	10	20525	836.5	QPSK	1	0	2525	881.5	LTE B2	20	900	1960	LTE B2	20	700	1940	LTE B66	20	66786	2145	LTE B66	20	66984	2164.8	-	-	-	-	-	-	-	-	25.26	25.04
CA_2A-2A-5B-66A	LTE B5	10	20525	836.5	QPSK	1	0	2525	881.5	LTE B5	5	2463	874.3	LTE B2	20	900	1960	LTE B2	20	700	1940	LTE B66	20	66786	2145	-	-	-	-	-	-	-	-	25.23	25.04
CA_2A-5A-30A-66A-66A	LTE B5	10	20525	836.5	QPSK	1	0	2525	881.5	LTE B2	20	900	1960	LTE B30	10	9820	2355	LTE B66	20	66786	2145	LTE B66	20	67236	2190	-	-	-	-	-	-	-	-	25.24	25.04
CA_2A-5B-30A-66A	LTE B5	10	20525	836.5	QPSK	1	0	2525	881.5	LTE B5	5	2463	874.3	LTE B2	20	900	1960	LTE B30	10	9820	2355	LTE B66	20	66786	2145	-	-	-	-	-	-	-	-	25.14	25.04
CA_2A-5A-66A-66A-66A	LTE B5	10	20525	836.5	QPSK	1	0	2525	881.5	LTE B2	20	900	1960	LTE B46	20	50665	5537.5	LTE B66	20	66786	2145	LTE B66	20	67236	2190	-	-	-	-	-	-	-	-	25.22	25.04
CA_2A-5A-48A-66A-66A	LTE B5	10	20525	836.5	QPSK	1	0	2525	881.5	LTE B2	20	900	1960	LTE B48	20	55990	5625	LTE B66	20	66786	2145	LTE B66	20	67236	2190	-	-	-	-	-	-	-	-	25.02	25.04
CA_2A-5A-48C-66A	LTE B5	10	20525	836.5	QPSK	1	0	2525	881.5	LTE B2	20	900	1960	LTE B48	20	55990	5625	LTE B48	20	56188	3644.8	LTE B66	20	66786	2145	-	-	-	-	-	-	-	-	25.25	25.04
CA_2A-5A-48D	LTE B5	10	20525	836.5	QPSK	1	0	2525	881.5	LTE B2	20	900	1960	LTE B48	20	55990	5625	LTE B48	20	56188	3644.8	LTE B48	20	56386	3664.6	-	-	-	-	-	-	-	-	25.24	25.04
CA_2A-5B-66A-66A	LTE B5	10	20525	836.5	QPSK	1	0	2525	881.5	LTE B5	5	2463	874.3	LTE B2	20	900	1960	LTE B66	20	66786	2145	LTE B66	20	67236	2190	-	-	-	-	-	-	-	-	25.24	25.04
CA_2A-5B-66B	LTE B5	10	20525	836.5	QPSK	1	0	2525	881.5	LTE B5	5	2463	874.3	LTE B2	20	900	1960	LTE B66	15	66786	2145	LTE B66	5	66879	2154.3	-	-	-	-	-	-	-	-	25.19	25.04
CA_2A-5B-66C	LTE B5	10	20525	836.5	QPSK	1	0	2525	881.5	LTE B5	5	2463	874.3	LTE B2	20	900	1960	LTE B66	20	66786	2145	LTE B66	20	66984	2164.8	-	-	-	-	-	-	-	-	25.21	25.04
CA_5B-30A-66A-66A	LTE B5	10	20525	836.5	QPSK	1	0	2525	881.5	LTE B5	5	2463	874.3	LTE B30	10	9820	2355	LTE B66	20	66786	2145	LTE B66	20	67236	2190	-	-	-	-	-	-	-	-	25.26	25.04
CA_5A-46E (1)	LTE B5	10	20525	836.5	QPSK	1	0	2525	881.5	LTE B46	20	50665	5537.5	LTE B46	20	50467	5517.7	LTE B46	20	50863	5557.3	LTE B46	20	51061	5577.1	-	-	-	-	-	-	-	-	24.78	25.04
CA_5B-46E (1)	LTE B5	10	20525	836.5	QPSK	1	0	2525	881.5	LTE B5	5	2463	874.3	LTE B46	20	50665	5537.5	LTE B46	20	50467	5517.7	LTE B46	20	50863	5557.3	-	-	-	-	-	-	-	-	24.70	25.04
CA_5A-46E-66A-66A	LTE B5	10	20525	836.5	QPSK	1	0	2525	881.5	LTE B46	20	50665	5537.5	LTE B46	20	50467	5517.7	LTE B46	20	50863	5557.3	LTE B46	20	51061	5577.1	LTE B66	20	66786	2145	LTE B66	20	67236	2190	24.95	25.04

© 2021 PCTEST

J.2.6 LTE Band 66 as PCC

Table J-8
Maximum Output Powers

	PCC									SCC 1				SCC 2				SCC 3				SCC 4				SCC 5				SCC 6				Power	
Combination	PCC Band	PCC BW [MHz]	PCC (UL) Ch.	PCC (UL) Freq. [MHz]	Mod.	PCC UL# RB	PCC UL RB Offset	PCC (DL) Channel	PCC (DL) Freq. [MHz]	SCC Band	SCC BW [MHz]	SCC (DL) Channel	SCC (DL) Freq. [MHz]	SCC Band	SCC BW [MHz]	SCC (DL) Channel	SCC (DL) Freq. [MHz]	SCC Band	SCC BW [MHz]	SCC (DL) Channel	SCC (DL) Freq. [MHz]	SCC Band	SCC BW [MHz]	SCC (DL) Channel	SCC (DL) Freq. [MHz]	SCC Band	SCC BW [MHz]	SCC (DL) Channel	SCC (DL) Freq. [MHz]	SCC Band	SCC BW [MHz]	SCC (DL) Channel	SCC (DL) Freq. [MHz]	LTE Tx.Power with DL CA Enabled (dBm)	LTE Single Carrier Tx Power (dBm)
CA_12A-66A (1)	LTE B66	5	131997	1712.5	QPSK	1	12	66461	2112.5	LTE B12	10	5095	737.5	-	-	-	-	-	-	-	-	-	-	-	-	-	-	-	-	-	-	-	-	23.11	23.28
CA_12A-66A (2)	LTE B66	5	131997	1712.5	QPSK	1	12	66461	2112.5	LTE B12	10	5095	737.5	-	-	-	-	-	-	-	-	-	-	-	-	-	-	-	-	-	-	-	-	23.11	23.28
CA_66A-66C	LTE B66	5	131997	1712.5	QPSK	1	12	66461	2112.5	LTE B66	20	67038	2170.2	LTE B66	20	67236	2190	-	-	-	-	-	-	-	-	-	-	-	-	-	-	-	-	23.06	23.28
CA_66C-66A	LTE B66	5	131997	1712.5	QPSK	1	12	66461	2112.5	LTE B66	20	66578	2124.2	LTE B66	20	67236	2190	-	-	-	-	-	-	-	-	-	-	-	-	-	-	-	-	23.12	23.28
CA_2A-2A-66A-71A	LTE B66	5	131997	1712.5	QPSK	1	12	66461	2112.5	LTE B2	20	900	1960	LTE B2	20	700	1940	LTE B71	20	68761	634.5	-	-	-	-	-	-	-	-	-	-	-	-	23.08	23.28
CA_2A-5A-48A-66A	LTE B66	5	131997	1712.5	QPSK	1	12	66461	2112.5	LTE B2	20	900	1960	LTE B5	10	2525	881.5	LTE B48	20	55990	3625	-	-	-	-	-	-	-	-	-	-	-	-	22.35	23.28
CA_2A-12A-66C	LTE B66	5	131997	1712.5	QPSK	1	12	66461	2112.5	LTE B66	20	66578	2124.2	LTE B2	20	900	1960	LTE B12	10	5095	737.5	-	-	-	-	-	-	-	-	-	-	-	-	23.10	23.28
CA_2A-13A-66C	LTE B66	5	131997	1712.5	QPSK	1	12	66461	2112.5	LTE B66	20	66578	2124.2	LTE B2	20	900	1960	LTE B13	10	5230	751	-	-	-	-	-	-	-	-	-	-	-	-	23.08	23.28
CA_2A-29A-30A-66A	LTE B66	5	131997	1712.5	QPSK	1	12	66461	2112.5	LTE B2	20	900	1960	LTE B29	10	9715	722.5	LTE B30	10	9820	2355	-	-	-	-	-	-	-	-	-	-	-	-	23.16	23.28
CA_2A-46A-46A-66A	LTE B66	5	131997	1712.5	QPSK	1	12	66461	2112.5	LTE B2	20	900	1960	LTE B46	20	50665	5537.5	LTE B46	20	47090	5180	-	-	-	-	-	-	-	-	-	-	-	-	23.19	23.28
CA_2A-46A-48A-66A	LTE B66	5	131997	1712.5	QPSK	1	12	66461	2112.5	LTE B2	20	900	1960	LTE B46	20	50665	5537.5	LTE B48	20	55990	3625	-	-	-	-	-	-	-	-	-	-	-	-	23.31	23.28
CA_2A-66A-66A-71A	LTE B66	5	131997	1712.5	QPSK	1	12	66461	2112.5	LTE B66	20	67236	2190	LTE B2	20	900	1960	LTE B71	20	68761	634.5	-	-	-	-	-	-	-	-	-	-	-	-	23.02	23.28
CA_2C-66A-66A	LTE B66	5	131997	1712.5	QPSK	1	12	66461	2112.5	LTE B66	20	67236	2190	LTE B2	20	900	1960	LTE B2	20	702	1940.2	-	-	-	-	-	-	-	-	-	-	-	-	23.16	23.28
CA_2A-66C-71A	LTE B66	5	131997	1712.5	QPSK	1	12	66461	2112.5	LTE B66	20	66578	2124.2	LTE B2	20	900	1960	LTE B71	20	68761	634.5	-	-	-	-	-	-	-	-	-	-	-	-	23.05	23.28
CA_5A-5A-66A-66A	LTE B66	5	131997	1712.5	QPSK	1	12	66461	2112.5	LTE B66	20	67236	2190	LTE B5	10	2525	881.5	LTE B5	5	2425	871.5	-	-	-	-	-	-	-	-	-	-	-	-	23.01	23.28
CA_5A-5A-66B	LTE B66	5	131997	1712.5	QPSK	1	12	66461	2112.5	LTE B66	15	66554	2121.8	LTE B5	10	2525	881.5	LTE B5	5	2425	871.5	-	-	-	-	-	-	-	-	-	-	-	-	22.30	23.28
CA_5A-5A-66C	LTE B66	5	131997	1712.5	QPSK	1	12	66461	2112.5	LTE B66	20	66578	2124.2	LTE B5	10	2525	881.5	LTE B5	5	2425	871.5	-	-	-	-	-	-	-	-	-	-	-	-	23.14	23.28
CA_13A-48A-66B	LTE B66	5	131997	1712.5	QPSK	1	12	66461	2112.5	LTE B66	15	66554	2121.8	LTE B13	10	5230	751	LTE B48	20	55990	3625	-	-	-	-	-	-	-	-	-	-	-	-	22.42	23.28
CA_13A-48A-66C	LTE B66	5	131997	1712.5	QPSK	1	12	66461	2112.5	LTE B66	20	66578	2124.2	LTE B13	10	5230	751	LTE B48	20	55990	3625	-	-	-	-	-	-	-	-	-	-	-	-	22.51	23.28
CA_29A-30A-66A-66A	LTE B66	5	131997	1712.5	QPSK	1	12	66461	2112.5	LTE B66	20	67236	2190	LTE B29	10	9715	722.5	LTE B30	10	9820	2355	-	-	-	-	-	-	-	-	-	-	-	-	23.16	23.28
CA_48A-48A-66A-66A	LTE B66	5	131997	1712.5	QPSK	1	12	66461	2112.5	LTE B66	20	67236	2190	LTE B48	20	55990	3625	LTE B48	20	55340	3560	-	-	-	-	-	-	-	-	-	-	-	-	22.47	23.28
CA_48A-48A-66B	LTE B66	5	131997	1712.5	QPSK	1	12	66461	2112.5	LTE B66	15	66554	2121.8	LTE B48	20	55990	3625	LTE B48	20	55340	3560	-	-	-	-	-	-	-	-	-	-	-	-	22.42	23.28
CA_48A-48A-66C	LTE B66	5	131997	1712.5	QPSK	1	12	66461	2112.5	LTE B66	20	66578	2124.2	LTE B48	20	55990	3625	LTE B48	20	55340	3560	-	-	-	-	-	-	-	-	-	-	-	-	22.51	23.28
CA_2A-2A-5A-30A-66A	LTE B66	5	131997	1712.5	QPSK	1	12	66461	2112.5	LTE B2	20	900	1960	LTE B2	20	700	1940	LTE B5	10	2525	881.5	LTE B30	10	9820	2355	-	-	-	-	-	-	-	-	23.16	23.28
CA_2A-2A-5A-66A-66A	LTE B66	5	131997	1712.5	QPSK	1	12	66461	2112.5	LTE B66	20	67236	2190	LTE B2	20	900	1960	LTE B2	20	700	1940	LTE B5	10	2525	881.5	-	-	-	-	-	-	-	-	23.21	23.28
CA_2A-2A-5A-66B	LTE B66	5	131997	1712.5	QPSK	1	12	66461	2112.5	LTE B66	15	66554	2121.8	LTE B2	20	900	1960	LTE B2	20	700	1940	LTE B5	10	2525	881.5	-	-	-	-	-	-	-	-	23.26	23.28
CA_2A-2A-5A-66C	LTE B66	5	131997	1712.5	QPSK	1	12	66461	2112.5	LTE B66	20	66578	2124.2	LTE B2	20	900	1960	LTE B2	10	700	1940	LTE B5	10	2525	881.5	-	-	-	-	-	-	-	-	23.25	23.28
CA_2A-2A-5B-66A	LTE B66	5	131997	1712.5	QPSK	1	12	66461	2112.5	LTE B2	20	900	1960	LTE B2	20	700	1940	LTE B5	10	2525	881.5	LTE B5	5	2453	874.3	-	-	-	-	-	-	-	-	23.13	23.28
CA_2A-2A-12A-30A-66A	LTE B66	5	131997	1712.5	QPSK	1	12	66461	2112.5	LTE B2	20	900	1960	LTE B2	20	700	1940	LTE B12	10	5095	737.5	LTE B30	10	9820	2355	-	-	-	-	-	-	-	-	23.26	23.28
CA_2A-2A-12A-66A-66A	LTE B66	5	131997	1712.5	QPSK	1	12	66461	2112.5	LTE B66	20	67236	2190	LTE B2	20	900	1960	LTE B2	20	700	1940	LTE B12	10	5095	737.5	-	-	-	-	-	-	-	-	23.23	23.28
CA_2A-2A-12B-66A	LTE B66	5	131997	1712.5	QPSK	1	12	66461	2112.5	LTE B2	20	900	1960	LTE B2	20	700	1940	LTE B12	5	5095	737.5	LTE B12	5	5047	732.7	-	-	-	-	-	-	-	-	23.11	23.28
CA_2A-2A-13A-66A-66A	LTE B66	5	131997	1712.5	QPSK	1	12	66461	2112.5	LTE B66	20	67236	2190	LTE B2	20	900	1960	LTE B2	20	700	1940	LTE B13	10	5230	751	-	-	-	-	-	-	-	-	23.25	23.28
CA_2A-2A-13A-66B	LTE B66	5	131997	1712.5	QPSK	1	12	66461	2112.5	LTE B66	15	66554	2121.8	LTE B2	20	900	1960	LTE B2	20	700	1940	LTE B13	10	5230	751	-	-	-	-	-	-	-	-	23.23	23.28
CA_2A-2A-14A-30A-66A	LTE B66	5	131997	1712.5	QPSK	1	12	66461	2112.5	LTE B2	20	900	1960	LTE B2	20	700	1940	LTE B14	10	5330	763	LTE B30	10	9820	2355	-	-	-	-	-	-	-	-	23.25	23.28
CA_2A-2A-14A-66A-66A	LTE B66	5	131997	1712.5	QPSK	1	12	66461	2112.5	LTE B66	20	67236	2190	LTE B2	20	900	1960	LTE B2	20	700	1940	LTE B14	10	5330	763	-	-	-	-	-	-	-	-	23.24	23.28
CA_2A-5A-30A-66A-66A	LTE B66	5	131997	1712.5	QPSK	1	12	66461	2112.5	LTE B66	20	67236	2190	LTE B2	20	900	1960	LTE B5	10	2525	881.5	LTE B30	10	9820	2355	-	-	-	-	-	-	-	-	23.22	23.28
CA_2A-5B-30A-66A	LTE B66	5	131997	1712.5	QPSK	1	12	66461	2112.5	LTE B2	20	900	1960	LTE B5	10	2525	881.5	LTE B5	5	2453	874.3	LTE B30	10	9820	2355	-	-	-	-	-	-	-	-	23.16	23.28
CA_2A-5A-46A-66A-66A	LTE B66	5	131997	1712.5	QPSK	1	12	66461	2112.5	LTE B66	20	67236	2190	LTE B2	10	900	1960	LTE B5	10	2525	881.5	LTE B46	20	50665	5537.5	-	-	-	-	-	-	-	-	23.10	23.28
CA_2A-5A-48A-66A-66A	LTE B66	5	131997	1712.5	QPSK	1	12	66461	2112.5	LTE B66	20	67236	2190	LTE B2	20	900	1960	LTE B5	10	2525	881.5	LTE B48	20	55990	3625	-	-	-	-	-	-	-	-	22.93	23.28
CA_2A-5A-48C-66A	LTE B66	5	131997	1712.5	QPSK	1	12	66461	2112.5	LTE B2	20	900	1960	LTE B5	10	2525	881.5	LTE B48	20	55990	3625	LTE B48	20	56188	3644.8	-	-	-	-	-	-	-	-	23.19	23.28
CA_2A-5B-66A-66A	LTE B66	5	131997	1712.5	QPSK	1	12	66461	2112.5	LTE B66	20	67236	2190	LTE B2	20	900	1960	LTE B5	10	2525	881.5	LTE B5	5	2453	874.3	-	-	-	-	-	-	-	-	23.19	23.28
CA_2A-5B-66B	LTE B66	5	131997	1712.5	QPSK	1	12	66461	2112.5	LTE B66	15	66554	2121.8	LTE B2	10	900	1960	LTE B5	10	2525	881.5	LTE B5	5	2453	874.3	-	-	-	-	-	-	-	-	23.18	23.28
CA_2A-5B-66C	LTE B66	5	131997	1712.5	QPSK	1	12	66461	2112.5	LTE B66	20	66578	2124.2	LTE B2	20	900	1960	LTE B5	10	2525	881.5	LTE B5	5	2453	874.3	-	-	-	-	-	-	-	-	23.25	23.28
CA_2A-12A-30A-66A-66A	LTE B66	5	131997	1712.5	QPSK	1	12	66461	2112.5	LTE B66	20	67236	2190	LTE B2	20	900	1960	LTE B12	10	5095	737.5	LTE B30	10	9820	2355	-	-	-	-	-	-	-	-	23.17	23.28
CA_2A-12B-66A-66A	LTE B66	5	131997	1712.5	QPSK	1	12	66461	2112.5	LTE B66	20	67236	2190	LTE B2	20	900	1960	LTE B12	5	5095	737.5	LTE B12	5	5047	732.7	-	-	-	-	-	-	-	-	23.24	23.28
CA_2A-13A-46A-66A-66A	LTE B66	5	131997	1712.5	QPSK	1	12	66461	2112.5	LTE B66	20	67236	2190	LTE B2	20	900	1960	LTE B13	10	5230	751	LTE B46	20	50665	5537.5	-	-	-	-	-	-	-	-	23.16	23.28
CA_2A-13A-48A-48A-66A	LTE B66	5	131997	1712.5	QPSK	1	12	66461	2112.5	LTE B2	20	900	1960	LTE B13	10	5230	751	LTE B48	20	55990	3625	LTE B48	20	55340	3560	-	-	-	-	-	-	-	-	23.02	23.28
CA_2A-13A-48C-66A	LTE B66	5	131997	1712.5	QPSK	1	12	66461	2112.5	LTE B2	20	900	1960	LTE B13	10	5230	751	LTE B48	20	55990	3625	LTE B48	20	56188	3644.8	-	-	-	-	-	-	-	-	23.23	23.28
CA_2A-13A-66A-66B	LTE B66	5	131997	1712.5	QPSK	1	12	66461	2112.5	LTE B66	5	67168	2183.2	LTE B66	15	67261	2192.5	LTE B2	20	900	1960	LTE B13	10	5230	751	-	-	-	-	-	-	-	-	23.22	23.28
CA_2A-13A-66B-66A	LTE B66	5	131997	1712.5	QPSK	1	12	66461	2112.5	LTE B66	15	66554	2121.8	LTE B66	20	67236	2190	LTE B2	20	900	1960	LTE B13	10	5230	751	-	-	-	-	-	-	-	-	23.20	23.28
CA_2A-14A-30A-66A-66A	LTE B66	5	131997	1712.5	QPSK	1	12	66461	2112.5	LTE B66	20	67236	2190	LTE B2	20	900	1960	LTE B14	10	5330	763	LTE B30	10	9820	2355	-	-	-	-	-	-	-	-	23.23	23.28
CA_2A-46A-46C-66A	LTE B66	5	131997	1712.5	QPSK	1	12	66461	2112.5	LTE B2	20	900	1960	LTE B46	20	50665	5537.5	LTE B46	20	50467	5517.7	LTE B46	20	53540	5825	-	-	-	-	-	-	-	-	23.25	23.28
CA_2A-46A-48C-66A	LTE B66	5	131997	1712.5	QPSK	1	12	66461	2112.5	LTE B2	20	900	1960	LTE B46	20	50665	5537.5	LTE B48	20	55990	3625	LTE B48	20	56188	3644.8	-	-	-	-	-	-	-	-	23.19	23.28
CA_2A-46C-48A-66A	LTE B66	5	131997	1712.5	QPSK	1	12	66461	2112.5	LTE B2	20	900	1960	LTE B46	20	50665	5537.5	LTE B46	20	50467	5517.7	LTE B48	20	55990	3625	-	-	-	-	-	-	-	-	23.38	23.28
CA_2A-48A-48C-66A	LTE B66	5	131997	1712.5	QPSK	1	12	66461	2112.5	LTE B2	20	900	1960	LTE B48	20	55990	3625	LTE B48	20	56640	3690	LTE B48	20	56442	3670.2	-	-	-	-	-	-	-	-	23.31	23.28
CA_5B-30A-66A-66A	LTE B66	5	131997	1712.5	QPSK	1	12	66461	2112.5	LTE B66	20	67236	2190	LTE B5	10	2525	881.5	LTE B5	5	2453	874.3	LTE B30	10	9820	2355	-	-	-	-	-	-	-	-	23.21	23.28
CA_5A-48D-66A	LTE B66	5	131997	1712.5	QPSK	1	12	66461	2112.5	LTE B5	10	2525	881.5	LTE B48	20	55990	3625	LTE B48	20	56188	3644.8	LTE B48	20	56386	3664.6	-	-	-	-	-	-	-	-	23.16	23.28
CA_13A-48A-48C-66A	LTE B66	5	131997	1712.5	QPSK	1	12	66461	2112.5	LTE B13	10	5230	751	LTE B48	20	55990	3625	LTE B48	20	56640	3690	LTE B48	20	56442	3670.2	-	-	-	-	-	-	-	-	23.12	23.28
CA_13A-48D-66A	LTE B66	5	131997	1712.5	QPSK	1	12	66461	2112.5	LTE B13	10	5230	751	LTE B48	20	55990	3625	LTE B48	20	56188	3644.8	LTE B48	20	56386	3664.6	-	-	-	-	-	-	-	-	23.22	23.28
CA_46A-46D-66A	LTE B66	5	131997	1712.5	QPSK	1	12	66461	2112.5	LTE B46	20	50665	5537.5	LTE B46	20	50467	5517.7	LTE B46	20	50863	5557.3	LTE B46	20	53540	5825	-	-	-	-	-	-	-	-	23.26	23.28
CA_48A-48C-66B	LTE B66	5	131997	1712.5	QPSK	1	12	66461	2112.5	LTE B66	15	66554	2121.8	LTE B48	20	55990	3625	LTE B48	20	55340	3560	LTE B48	20	55538	3579.8	-	-	-	-	-	-	-	-	23.16	23.28
CA_48A-48C-66C	LTE B66	5	131997	1712.5	QPSK	1	12	66461	2112.5	LTE B66	20	66578	2124.2	LTE B48	20	55990	3625	LTE B48	20	55340	3560	LTE B48	20	55538	3579.8	-	-	-	-	-	-	-	-	23.27	23.28
CA_48A-48D-66A	LTE B66	5	131997	1712.5	QPSK	1	12	66461	2112.5	LTE B48	20	55990	3625	LTE B48	20	56640	3690	LTE B48	20	56442	3670.2	LTE B48	20	56244	3650.4	-	-	-	-	-	-	-	-	23.19	23.28
CA_48C-48C-66A	LTE B66	5	131997	1712.5	QPSK	1	12	66461	2112.5	LTE B48	20	55990	3625	LTE B48	20	56188	3644.8	LTE B48	20	55340	3560	LTE B48	20	55538	3579.8	-	-	-	-	-	-	-	-	23.13	23.28
CA_2A-5A-46C-66A-66A	LTE B66	5	131997	1712.5	QPSK	1	12	66461	2112.5	LTE B66	20	67236	2190	LTE B2	20	900	1960	LTE B5	10	2525	881.5	LTE B46	20	50665	5537.5	LTE B46	20	50467	5517.7	-	-	-	-	23.18	23.28
CA_2A-5A-48C-66A-66A	LTE B66	5	131997	1712.5	QPSK	1	12	66461	2112.5	LTE B66	20	67236	2190	LTE B2	20	900	1960	LTE B5	10	2525	881.5	LTE B48	20	55990	3625	LTE B48	20	56188	3644.8	-	-	-	-	23.33	23.28
CA_2A-13A-46C-66A-66A	LTE B66	5	131997	1712.5	QPSK	1	12	66461	2112.5	LTE B66	20	67236	2190	LTE B2	20	900	1960	LTE B13	10	5230	751	LTE B46	20	50665	5537.5	LTE B46	20	50467	5517.7	-	-	-	-	23.16	23.28
CA_2A-46A-48D-66A	LTE B66	5	131997	1712.5	QPSK	1	12	66461	2112.5	LTE B2	20	900	1960	LTE B46	20	50665	5537.5	LTE B48	20	55990	3625	LTE B48	20	56188	3644.8	LTE B48	20	56386	3664.6	-	-	-	-	23.17	23.28
CA_2A-46C-48C-66A	LTE B66	5	131997	1712.5	QPSK	1	12	66461	2112.5	LTE B2	20	900	1960	LTE B46	20	50665	5537.5	LTE B46	20	50467	5517.7	LTE B48	20	55990	3625	LTE B48	20	56188	3644.8	-	-	-	-	23.36	23.28
CA_2A-46D-48A-66A	LTE B66	5	131997	1712.5	QPSK	1	12	66461	2112.5	LTE B2	20	900	1960	LTE B46	20	50665	5537.5	LTE B46	20	50467	5517.7	LTE B46	20	50863	5557.3	LTE B48	20	55990	3625	-	-	-	-	23.34	23.28
CA_2A-48E-66A	LTE B66	5	131997	1712.5	QPSK	1	12	66461	2112.5	LTE B2	20	900	1960	LTE B48	20	55990	3625	LTE B48	20	56188	3644.8	LTE B48	20	56386	3664.6	LTE B48	20	55792	3605.2	-	-	-	-	23.18	23.28
CA_13A-46E-66A	LTE B66	5	131997	1712.5	QPSK	1	12	66461	2112.5	LTE B13	10	5230	751	LTE B46	20	50665	5537.5	LTE B46	20	50467	5517.7	LTE B46	20	50863	5557.3	LTE B46	20	50269	5497.9	-	-	-	-	23.24	23.28
CA_13A-48E-66A	LTE B66	5	131997	1712.5	QPSK	1	12	66461	2112.5	LTE B13	10	5230	751	LTE B48	20	55990	3625	LTE B48	20	56188	3644.8	LTE B48	20	56386	3664.6	LTE B48	20	55792	3605.2	-	-	-	-	23.21	23.28
CA_46A-48E-66A	LTE B66	5	131997	1712.5	QPSK	1	12	66461	2112.5	LTE B46	20	50665	5537.5	LTE B48	20	55990	3625	LTE B48	20	56188	3644.8	LTE B48	20	56386	3664.6	LTE B48	20	55792	3605.2	-	-	-	-	23.10	23.28
CA_2A-5A-46D-66A-66A	LTE B66	5	131997	1712.5	QPSK	1	12	66461	2112.5	LTE B66	20	67236	2190	LTE B2	10	900	1960	LTE B5	10	2525	881.5	LTE B46	20	50665	5537.5	LTE B46	20	50467	5517.7	LTE B46	20	50863	5557.3	23.11	23.28
CA_2A-5A-46E-66A	LTE B66	5	131997	1712.5	QPSK	1	12	66461	2112.5	LTE B2	20	900	1960	LTE B5	10	2525	881.5	LTE B46	20	50665	5537.5	LTE B46	20	50467	5517.7	LTE B46	20	50863	5557.3	LTE B46	20	51061	5577.1	23.12	23.28
CA_2A-13A-46D-66A-66A	LTE B66	5	131997	1712.5	QPSK	1	12	66461	2112.5	LTE B66	20	67236	2190	LTE B2	20	900	1960	LTE B13	10	5230	751	LTE B46	20	50665	5537.5	LTE B46	20	50467	5517.7	LTE B46	20	50863	5557.3	23.13	23.28
CA_2A-46C-48D-66A	LTE B66	5	131997	1712.5	QPSK	1	12	66461	2112.5	LTE B2	20	900	1960	LTE B46	20	50665	5537.5	LTE B46	20	50467	5517.7	LTE B48	20	55990	3625	LTE B48	20	56188	3644.8	LTE B48	20	56386	3664.6	23.35	23.28
CA_2A-46D-48C-66A	LTE B66	5	131997	1712.5	QPSK	1	12	66461	2112.5	LTE B2	20	900	1960	LTE B46	20	50665	5537.5	LTE B46	20	50467	5517.7	LTE B46	20	50269	5497.9	LTE B48	20	55990	3625	LTE B48	20	56188	3644.8	23.33	23.28
CA_2A-46E-48A-66A	LTE B66	5	131997	1712.5	QPSK	1	12	66461	2112.5	LTE B2	20	900	1960	LTE B46	20	50665	5537.5	LTE B46	20	50467	5517.7	LTE B46	20	50863	5557.3	LTE B46	20	51061	5577.1	LTE B48	20	55990	3625	23.36	23.28
CA_2A-46E-66A-66A	LTE B66	5	131997	1712.5	QPSK	1	12	66461	2112.5	LTE B66	20	67236	2190	LTE B2	20	900	1960	LTE B46	20	50665	5537.5	LTE B46	20	50467	5517.7	LTE B46	20	50863	5557.3	LTE B46	20	51061	5577.1	23.15	23.28
CA_5A-46E-66A-66A	LTE B66	5	131997	1712.5	QPSK	1	12	66461	2112.5	LTE B66	20	67236	2190	LTE B5	10	2525	881.5	LTE B46	20	50665	5537.5	LTE B46	20	50467	5517.7	LTE B46	20	50863	5557.3	LTE B46	20	51061	5577.1	23.12	23.28
CA_46C-48E-66A	LTE B66	5	131997	1712.5	QPSK	1	12	66461	2112.5	LTE B46	20	50665	5537.5	LTE B46	20	50467	5517.7	LTE B48	20	55990	3625	LTE B48	20	56188	3644.8	LTE B48	20	56386	3664.6	LTE B48	20	55792	3605.2	23.37	23.28
CA_46E-48C-66A	LTE B66	5	131997	1712.5	QPSK	1	12	66461	2112.5	LTE B46	20	50665	5537.5	LTE B46	20	50467	5517.7	LTE B46	20	50863	5557.3	LTE B46	20	50269	5497.9	LTE B48	20	55990	3625	LTE B48	20	56188	3644.8	23.38	23.28

J.2.7 LTE Band 25 as PCC

Table J-9
Maximum Output Powers

	PCC									SCC 1				Power	
Combination	PCC Band	PCC BW [MHz]	PCC (UL) Ch.	PCC (UL) Freq. [MHz]	Mod.	PCC UL# RB	PCC UL RB Offset	PCC (DL) Channel	PCC (DL) Freq. [MHz]	SCC Band	SCC BW [MHz]	SCC (DL) Channel	SCC (DL) Freq. [MHz]	LTE Tx.Power with DL CA Enabled (dBm)	LTE Single Carrier Tx Power (dBm)
CA_5A-25A	LTE B25	15	26365	1882.5	QPSK	1	36	8365	1962.5	LTE B5	10	2525	881.5	23.76	23.73
CA_12A-25A	LTE B25	15	26365	1882.5	QPSK	1	36	8365	1962.5	LTE B12	10	5095	737.5	23.57	23.73
CA_25A-25A (1)	LTE B25	15	26365	1882.5	QPSK	1	36	8365	1962.5	LTE B25	20	8140	1940	23.80	23.73

J.2.8 LTE Band 30 as PCC

Table J-10
Maximum Output Powers

	PCC									SCC 1				SCC 2				SCC 3				SCC 4				Power	
Combination	PCC Band	PCC BW [MHz]	PCC (UL) Ch.	PCC (UL) Freq. [MHz]	Mod.	PCC UL# RB	PCC UL RB Offset	PCC (DL) Channel	PCC (DL) Freq. [MHz]	SCC Band	SCC BW [MHz]	SCC (DL) Channel	SCC (DL) Freq. [MHz]	SCC Band	SCC BW [MHz]	SCC (DL) Channel	SCC (DL) Freq. [MHz]	SCC Band	SCC BW [MHz]	SCC (DL) Channel	SCC (DL) Freq. [MHz]	SCC Band	SCC BW [MHz]	SCC (DL) Channel	SCC (DL) Freq. [MHz]	LTE Tx.Power with DL CA Enabled (dBm)	LTE Single Carrier Tx Power (dBm)
CA_2A-2A-29A-30A	LTE B30	5	27710	2310	QPSK	1	12	9820	2355	LTE B2	20	900	1960	LTE B2	20	700	1940	LTE B29	10	9715	722.5	-	-	-	-	22.43	22.36
CA_2A-29A-30A-66A	LTE B30	5	27710	2310	QPSK	1	12	9820	2355	LTE B2	20	900	1960	LTE B29	10	9715	722.5	LTE B66	20	66786	2145	-	-	-	-	22.25	22.36
CA_29A-30A-66A-66A	LTE B30	5	27710	2310	QPSK	1	12	9820	2355	LTE B29	10	9715	722.5	LTE B66	20	66786	2145	LTE B66	20	67236	2190	-	-	-	-	22.31	22.36
CA_2A-2A-5A-30A-66A	LTE B30	5	27710	2310	QPSK	1	12	9820	2355	LTE B2	20	900	1960	LTE B2	20	700	1940	LTE B5	10	2525	881.5	LTE B66	20	66786	2145	22.33	22.36
CA_2A-2A-12A-30A-66A	LTE B30	5	27710	2310	QPSK	1	12	9820	2355	LTE B2	20	900	1960	LTE B2	20	700	1940	LTE B12	10	5095	737.5	LTE B66	20	66786	2145	22.32	22.36
CA_2A-2A-14A-30A-66A	LTE B30	5	27710	2310	QPSK	1	12	9820	2355	LTE B2	20	900	1960	LTE B2	20	700	1940	LTE B14	10	5330	763	LTE B66	20	66786	2145	22.30	22.36
CA_2A-5A-30A-66A-66A	LTE B30	5	27710	2310	QPSK	1	12	9820	2355	LTE B2	20	900	1960	LTE B5	10	2525	881.5	LTE B66	20	66786	2145	LTE B66	20	67236	2190	22.37	22.36
CA_2A-5B-30A-66A	LTE B30	5	27710	2310	QPSK	1	12	9820	2355	LTE B2	20	900	1960	LTE B5	10	2525	881.5	LTE B5	5	2453	874.3	LTE B66	20	66786	2145	22.36	22.36
CA_2A-12A-30A-66A-66A	LTE B30	5	27710	2310	QPSK	1	12	9820	2355	LTE B2	20	900	1960	LTE B12	10	5095	737.5	LTE B66	20	66786	2145	LTE B66	20	67236	2190	22.32	22.36
CA_2A-14A-30A-66A-66A	LTE B30	5	27710	2310	QPSK	1	12	9820	2355	LTE B2	20	900	1960	LTE B14	10	5330	763	LTE B66	20	66786	2145	LTE B66	20	67236	2190	22.35	22.36
CA_5B-30A-66A-66A	LTE B30	5	27710	2310	QPSK	1	12	9820	2355	LTE B5	10	2525	881.5	LTE B5	5	2453	874.3	LTE B66	20	66786	2145	LTE B66	20	67236	2190	22.29	22.36

J.2.9 LTE Band 41 as PCC

Table J-11
Maximum Output Powers

	PCC									SCC 1				SCC 2				Power	
Combination	PCC Band	PCC BW [MHz]	PCC (UL) Ch.	PCC (UL) Freq. [MHz]	Mod.	PCC UL# RB	PCC UL RB Offset	PCC (DL) Channel	PCC (DL) Freq. [MHz]	SCC Band	SCC BW [MHz]	SCC (DL) Channel	SCC (DL) Freq. [MHz]	SCC Band	SCC BW [MHz]	SCC (DL) Channel	SCC (DL) Freq. [MHz]	LTE Tx.Power with DL CA Enabled (dBm)	LTE Single Carrier Tx Power (dBm)
CA_41C (1)	LTE B41	10	40620	2593	QPSK	1	25	40620	2593	LTE B41	20	40764	2607.4	-	-	-	-	23.99	23.98
CA_41D	LTE B41	10	40620	2593	QPSK	1	25	40620	2593	LTE B41	20	40476	2578.6	LTE B41	20	40764	2607.4	23.98	23.98

© 2021 PCTEST

J.2.10 LTE Band 48 as PCC

Table J-12
Maximum Output Powers

	PCC									SCC 1					SCC 2					SCC 3					SCC 4					Power	
Combination	PCC Band	PCC BW [MHz]	PCC (UL) Ch.	PCC (UL) Freq. [MHz]	Mod.	PCC UL# RB	PCC UL RB Offset	PCC (DL) Channel	PCC (DL) Freq. [MHz]	SCC Band	SCC BW [MHz]	SCC (DL) Channel	SCC (DL) Freq. [MHz]	SCC Band	SCC BW [MHz]	SCC (DL) Channel	SCC (DL) Freq. [MHz]	SCC Band	SCC BW [MHz]	SCC (DL) Channel	SCC (DL) Freq. [MHz]	SCC Band	SCC BW [MHz]	SCC (DL) Channel	SCC (DL) Freq. [MHz]	LTE Tx.Power with DL CA Enabled (dBm)	LTE Single Carrier Tx Power (dBm)
CA_48A-48A	LTE B48	10	55290	3555	16QAM	1	25	55290	3555	LTE B48	20	56640	3690	-	-	-	-	-	-	-	-	-	-	-	-	21.43	21.40
CA_48A-48C	LTE B48	10	55290	3555	16QAM	1	25	55290	3555	LTE B48	20	56640	3690	LTE B48	20	56442	3670.2	-	-	-	-	-	-	-	-	21.41	21.40
CA_48C-48A	LTE B48	10	55290	3555	16QAM	1	25	55290	3555	LTE B48	20	55434	3569.4	LTE B48	20	56640	3690	-	-	-	-	-	-	-	-	21.07	21.40
CA_48A-48D	LTE B48	10	55290	3555	16QAM	1	25	55290	3555	LTE B48	20	56640	3690	LTE B48	20	56442	3670.2	LTE B48	20	56244	3650.4	-	-	-	-	21.09	21.40
CA_48D-48A	LTE B48	10	55290	3555	16QAM	1	25	55290	3555	LTE B48	20	55434	3569.4	LTE B48	20	55632	3589.2	LTE B48	20	56640	3690	-	-	-	-	21.07	21.40
CA_48C-48C	LTE B48	10	55290	3555	16QAM	1	25	55290	3555	LTE B48	20	55434	3569.4	LTE B48	20	56640	3690	LTE B48	20	56442	3670.2	-	-	-	-	21.06	21.40
CA_48A-48E	LTE B48	10	55290	3555	16QAM	1	25	55290	3555	LTE B48	20	56640	3690	LTE B48	20	56442	3670.2	LTE B48	20	56244	3650.4	LTE B48	20	56046	3630.6	21.32	21.40
CA_48E-48A	LTE B48	10	55290	3555	16QAM	1	25	55290	3555	LTE B48	20	55434	3569.4	LTE B48	20	55632	3589.2	LTE B48	20	55884	3614.4	LTE B48	20	56640	3690	21.43	21.40
CA_48C-48D	LTE B48	10	55290	3555	16QAM	1	25	55290	3555	LTE B48	20	55434	3569.4	LTE B48	20	56640	3690	LTE B48	20	56442	3670.2	LTE B48	20	56244	3650.4	21.35	21.40
CA_48D-48C	LTE B48	10	55290	3555	16QAM	1	25	55290	3555	LTE B48	20	55434	3569.4	LTE B48	20	55632	3589.2	LTE B48	20	56640	3690	LTE B48	20	56442	3670.2	21.11	21.40
CA_48F	LTE B48	10	55290	3555	16QAM	1	25	55290	3555	LTE B48	20	55434	3569.4	LTE B48	20	55632	3589.2	LTE B48	20	55830	3609	LTE B48	20	56028	3628.8	21.33	21.40

J.3 DL CA with DL 4x4 MIMO RF Conduction Powers

This device supports downlink 4x4 MIMO operations for some LTE bands. Uplink transmission is limited to a single output stream. When carrier aggregation was applicable, the general test selection and setup procedures described in Section J.1 were applied.

Per May 2017 TCB Workshop Notes, SAR for 4x4 DL MIMO was not needed since the maximum average output power in 4x4 DL MIMO mode was not more than 0.25 dB higher than the maximum output power with 4x4 DL MIMO inactive. Additionally, SAR for 4x4 MIMO Downlink Carrier Aggregation was not needed since the maximum average output power in 4x4 MIMO Downlink Carrier Aggregation mode was not more than 0.25 dB higher than the maximum output power with 4x4 MIMO Downlink and downlink carrier aggregation inactive.

J.3.1 LTE 4x4 MIMO DL Standalone Powers

Table J-13
Maximum Output Powers

LTE Band	Bandwidth [MHz]	Channel	Frequency [MHz]	Modulation	RB Size	RB Offset	4x4 DL MIMO Tx. Power [dBm]	Single Antenna Tx. Power [dBm]	Target Power [dBm]
66	5	131997	1712.5	QPSK	1	12	23.33	23.28	23.0
25	15	26365	1882.5	QPSK	1	36	22.68	23.73	23.5
30	5	27710	2310	QPSK	1	12	22.40	22.36	22.5
41	10	40620	2593	QPSK	1	25	23.95	23.98	23.5
48	10	55290	3555	16QAM	1	25	21.32	21.40	20.5

© 2021 PCTEST

J.3.2 LTE Band 71 as PCC

Table J-14
Maximum Output Powers

	PCC										SCC 1					SCC 2					SCC 3					Power	
Combination	PCC Band	PCC BW [MHz]	PCC (UL) Ch.	PCC (UL) Freq. [MHz]	Mod.	PCC UL# RB	PCC UL RB Offset	PCC (DL) Ch.	PCC (DL) Freq. [MHz]	DL Ant. Config.	SCC Band	SCC BW [MHz]	SCC (DL) Ch.	SCC (DL) Freq. [MHz]	DL Ant. Config.	SCC Band	SCC BW [MHz]	SCC (DL) Ch.	SCC (DL) Freq. [MHz]	DL Ant. Config.	SCC Band	SCC BW [MHz]	SCC (DL) Ch.	SCC (DL) Freq. [MHz]	DL Ant. Config.	LTE Tx.Power with DL CA Enabled	LTE Single Carrier Tx Power (dBm)
CA_[4A]-4A-71A	LTE B71	5	133447	695.5	QPSK	1	12	68911	649.5	2x2	LTE B4	20	2175	2132.5	4x4	LTE B4	10	2350	2150	2x2	-	-	-	-	-	24.98	24.79
CA_[4A]-[4A]-71A	LTE B71	5	133447	695.5	QPSK	1	12	68911	649.5	2x2	LTE B4	20	2175	2132.5	4x4	LTE B4	10	2350	2150	4x4	-	-	-	-	-	24.95	24.79
CA_[48A]-48A-71A	LTE B71	5	133447	695.5	QPSK	1	12	68911	649.5	2x2	LTE B48	20	55990	3625	4x4	LTE B48	20	56640	3690	2x2	-	-	-	-	-	24.90	24.79
CA_[48A]-[48A]-71A	LTE B71	5	133447	695.5	QPSK	1	12	68911	649.5	2x2	LTE B48	20	55990	3625	4x4	LTE B48	20	55340	3560	4x4	-	-	-	-	-	24.87	24.79
CA_[48C]-71A	LTE B71	5	133447	695.5	QPSK	1	12	68911	649.5	2x2	LTE B48	20	55990	3625	4x4	LTE B48	20	56188	3644.8	4x4	-	-	-	-	-	24.88	24.79
CA_2A-2A-[4A]-71A	LTE B71	5	133447	695.5	QPSK	1	12	68911	649.5	2x2	LTE B2	20	900	1960	2x2	LTE B2	20	700	1940	2x2	LTE B4	20	2175	2132.5	4x4	24.98	24.79
CA_[2A]-2A-4A-71A	LTE B71	5	133447	695.5	QPSK	1	12	68911	649.5	2x2	LTE B2	20	900	1960	4x4	LTE B2	20	700	1940	2x2	LTE B4	20	2175	2132.5	2x2	25.00	24.79
CA_[2A]-2A-[4A]-71A	LTE B71	5	133447	695.5	QPSK	1	12	68911	649.5	2x2	LTE B2	20	900	1960	4x4	LTE B2	20	700	1940	2x2	LTE B4	20	2175	2132.5	4x4	25.03	24.79
CA_[2A]-[2A]-4A-71A	LTE B71	5	133447	695.5	QPSK	1	12	68911	649.5	2x2	LTE B2	20	900	1960	4x4	LTE B2	20	700	1940	4x4	LTE B4	20	2175	2132.5	2x2	24.96	24.79
CA_[2A]-[2A]-[4A]-71A	LTE B71	5	133447	695.5	QPSK	1	12	68911	649.5	2x2	LTE B2	20	900	1960	4x4	LTE B2	20	700	1940	4x4	LTE B4	20	2175	2132.5	4x4	24.99	24.79
CA_2A-2A-[66A]-71A	LTE B71	5	133447	695.5	QPSK	1	12	68911	649.5	2x2	LTE B2	20	900	1960	2x2	LTE B2	20	700	1940	2x2	LTE B66	20	66786	2145	4x4	24.98	24.79
CA_[2A]-2A-66A-71A	LTE B71	5	133447	695.5	QPSK	1	12	68911	649.5	2x2	LTE B2	20	900	1960	4x4	LTE B2	20	700	1940	2x2	LTE B66	20	66786	2145	2x2	24.94	24.79
CA_[2A]-2A-[66A]-71A	LTE B71	5	133447	695.5	QPSK	1	12	68911	649.5	2x2	LTE B2	20	900	1960	4x4	LTE B2	20	700	1940	2x2	LTE B66	20	66786	2145	4x4	25.01	24.79
CA_[2A]-[2A]-66A-71A	LTE B71	5	133447	695.5	QPSK	1	12	68911	649.5	2x2	LTE B2	20	900	1960	4x4	LTE B2	20	700	1940	4x4	LTE B66	20	66786	2145	2x2	25.03	24.79
CA_[2A]-[2A]-[66A]-71A	LTE B71	5	133447	695.5	QPSK	1	12	68911	649.5	2x2	LTE B2	20	900	1960	4x4	LTE B2	20	700	1940	4x4	LTE B66	20	66786	2145	4x4	25.00	24.79
CA_2A-[66A]-66A-71A	LTE B71	5	133447	695.5	QPSK	1	12	68911	649.5	2x2	LTE B2	20	900	1960	2x2	LTE B66	20	66786	2145	4x4	LTE B66	20	67236	2190	2x2	24.95	24.79
CA_2A-[66A]-[66A]-71A	LTE B71	5	133447	695.5	QPSK	1	12	68911	649.5	2x2	LTE B2	20	900	1960	2x2	LTE B66	20	66786	2145	4x4	LTE B66	20	67236	2190	4x4	25.02	24.79
CA_[2A]-66A-66A-71A	LTE B71	5	133447	695.5	QPSK	1	12	68911	649.5	2x2	LTE B2	20	900	1960	4x4	LTE B66	20	66786	2145	2x2	LTE B66	20	67236	2190	2x2	25.00	24.79
CA_[2A]-[66A]-66A-71A	LTE B71	5	133447	695.5	QPSK	1	12	68911	649.5	2x2	LTE B2	20	900	1960	4x4	LTE B66	20	66786	2145	4x4	LTE B66	20	67236	2190	2x2	25.02	24.79
CA_[2A]-[66A]-[66A]-71A	LTE B71	5	133447	695.5	QPSK	1	12	68911	649.5	2x2	LTE B2	20	900	1960	4x4	LTE B66	20	66786	2145	4x4	LTE B66	20	67236	2190	4x4	25.02	24.79
CA_2A-[66C]-71A	LTE B71	5	133447	695.5	QPSK	1	12	68911	649.5	2x2	LTE B2	20	900	1960	2x2	LTE B66	20	66786	2145	4x4	LTE B66	20	66984	2164.8	4x4	25.03	24.79
CA_[2A]-66C-71A	LTE B71	5	133447	695.5	QPSK	1	12	68911	649.5	2x2	LTE B2	20	900	1960	4x4	LTE B66	20	66786	2145	2x2	LTE B66	20	66984	2164.8	2x2	25.01	24.79
CA_[2A]-[66C]-71A	LTE B71	5	133447	695.5	QPSK	1	12	68911	649.5	2x2	LTE B2	20	900	1960	4x4	LTE B66	20	66786	2145	4x4	LTE B66	20	66984	2164.8	4x4	24.98	24.79

J.3.3 LTE Band 12 as PCC

Table J-15
Maximum Output Powers

	PCC										SCC 1					SCC 2					SCC 3					SCC 4					Power	
Combination	PCC Band	PCC BW [MHz]	PCC (UL) Ch.	PCC (UL) Freq. [MHz]	Mod.	PCC UL# RB	PCC UL RB Offset	PCC (DL) Ch.	PCC (DL) Freq. [MHz]	DL Ant. Config.	SCC Band	SCC BW [MHz]	SCC (DL) Ch.	SCC (DL) Freq. [MHz]	DL Ant. Config.	SCC Band	SCC BW [MHz]	SCC (DL) Ch.	SCC (DL) Freq. [MHz]	DL Ant. Config.	SCC Band	SCC BW [MHz]	SCC (DL) Ch.	SCC (DL) Freq. [MHz]	DL Ant. Config.	SCC Band	SCC BW [MHz]	SCC (DL) Ch.	SCC (DL) Freq. [MHz]	DL Ant. Config.	LTE Tx.Power with DL CA Enabled	LTE Single Carrier Tx Power (dBm)
CA_[2A]-12A (1)	LTE B12	5	23155	713.5	QPSK	1	12	5155	743.5	2x2	LTE B2	20	900	1960	4x4	-	-	-	-	-	-	-	-	-	-	-	-	-	-	-	25.15	24.95
CA_[4A]-12A (1)	LTE B12	5	23155	713.5	QPSK	1	12	5155	743.5	2x2	LTE B4	20	2175	2132.5	4x4	-	-	-	-	-	-	-	-	-	-	-	-	-	-	-	25.17	24.95
CA_[4A]-12A (2)	LTE B12	5	23155	713.5	QPSK	1	12	5155	743.5	2x2	LTE B4	20	2175	2132.5	4x4	-	-	-	-	-	-	-	-	-	-	-	-	-	-	-	25.17	24.95
CA_12A-[48A]	LTE B12	5	23155	713.5	QPSK	1	12	5155	743.5	2x2	LTE B48	20	55990	3625	4x4	-	-	-	-	-	-	-	-	-	-	-	-	-	-	-	25.14	24.95
CA_12A-[66A] (1)	LTE B12	5	23155	713.5	QPSK	1	12	5155	743.5	2x2	LTE B66	20	66786	2145	4x4	-	-	-	-	-	-	-	-	-	-	-	-	-	-	-	25.18	24.95
CA_12A-[66A] (2)	LTE B12	5	23155	713.5	QPSK	1	12	5155	743.5	2x2	LTE B66	20	66786	2145	4x4	-	-	-	-	-	-	-	-	-	-	-	-	-	-	-	25.18	24.95
CA_12A-[48C]	LTE B12	5	23155	713.5	QPSK	1	12	5155	743.5	2x2	LTE B48	20	55990	3625	4x4	LTE B48	20	56188	3644.8	4x4	-	-	-	-	-	-	-	-	-	-	25.18	24.95
CA_2A-2A-[4A]-12A	LTE B12	5	23155	713.5	QPSK	1	12	5155	743.5	2x2	LTE B2	20	900	1960	2x2	LTE B2	20	700	1940	2x2	LTE B4	20	2175	2132.5	4x4	-	-	-	-	-	25.17	24.95
CA_[2A]-2A-4A-12A	LTE B12	5	23155	713.5	QPSK	1	12	5155	743.5	2x2	LTE B2	20	900	1960	4x4	LTE B2	20	700	1940	2x2	LTE B4	20	2175	2132.5	2x2	-	-	-	-	-	25.12	24.95
CA_[2A]-2A-[4A]-12A	LTE B12	5	23155	713.5	QPSK	1	12	5155	743.5	2x2	LTE B2	20	900	1960	4x4	LTE B2	20	700	1940	2x2	LTE B4	20	2175	2132.5	4x4	-	-	-	-	-	25.16	24.95
CA_[2A]-[2A]-4A-12A	LTE B12	5	23155	713.5	QPSK	1	12	5155	743.5	2x2	LTE B2	20	900	1960	4x4	LTE B2	20	700	1940	4x4	LTE B4	20	2175	2132.5	2x2	-	-	-	-	-	25.15	24.95
CA_[2A]-[2A]-[4A]-12A	LTE B12	5	23155	713.5	QPSK	1	12	5155	743.5	2x2	LTE B2	20	900	1960	4x4	LTE B2	20	700	1940	4x4	LTE B4	20	2175	2132.5	4x4	-	-	-	-	-	25.19	24.95
CA_2A-[4A]-4A-12A	LTE B12	5	23155	713.5	QPSK	1	12	5155	743.5	2x2	LTE B2	20	900	1960	2x2	LTE B4	20	2175	2132.5	4x4	LTE B4	10	2350	2150	2x2	-	-	-	-	-	25.14	24.95
CA_2A-[4A]-[4A]-12A	LTE B12	5	23155	713.5	QPSK	1	12	5155	743.5	2x2	LTE B2	20	900	1960	2x2	LTE B4	20	2175	2132.5	4x4	LTE B4	10	2350	2150	4x4	-	-	-	-	-	25.16	24.95
CA_[2A]-4A-4A-12A	LTE B12	5	23155	713.5	QPSK	1	12	5155	743.5	2x2	LTE B2	20	900	1960	4x4	LTE B4	20	2175	2132.5	2x2	LTE B4	10	2350	2150	2x2	-	-	-	-	-	25.17	24.95
CA_[2A]-[4A]-4A-12A	LTE B12	5	23155	713.5	QPSK	1	12	5155	743.5	2x2	LTE B2	20	900	1960	4x4	LTE B4	20	2175	2132.5	4x4	LTE B4	10	2350	2150	2x2	-	-	-	-	-	25.14	24.95
CA_[2A]-[4A]-[4A]-12A	LTE B12	5	23155	713.5	QPSK	1	12	5155	743.5	2x2	LTE B2	20	900	1960	4x4	LTE B4	20	2175	2132.5	4x4	LTE B4	10	2350	2150	4x4	-	-	-	-	-	25.16	24.95
CA_2A-[4A]-12B	LTE B12	5	23155	713.5	QPSK	1	12	5155	743.5	2x2	LTE B12	5	5107	738.7	2x2	LTE B2	20	900	1960	2x2	LTE B4	20	2175	2132.5	4x4	-	-	-	-	-	25.10	24.95
CA_[2A]-4A-12B	LTE B12	5	23155	713.5	QPSK	1	12	5155	743.5	2x2	LTE B12	5	5107	738.7	2x2	LTE B2	20	900	1960	4x4	LTE B4	20	2175	2132.5	2x2	-	-	-	-	-	25.13	24.95
CA_[2A]-[4A]-12B	LTE B12	5	23155	713.5	QPSK	1	12	5155	743.5	2x2	LTE B12	5	5107	738.7	2x2	LTE B2	20	900	1960	4x4	LTE B4	20	2175	2132.5	4x4	-	-	-	-	-	25.17	24.95
CA_2A-12A-[66C]	LTE B12	5	23155	713.5	QPSK	1	12	5155	743.5	2x2	LTE B2	20	900	1960	2x2	LTE B66	20	66786	2145	4x4	LTE B66	20	66984	2164.8	4x4	-	-	-	-	-	25.08	24.95
CA_[2A]-12A-66C	LTE B12	5	23155	713.5	QPSK	1	12	5155	743.5	2x2	LTE B2	20	900	1960	4x4	LTE B66	20	66786	2145	2x2	LTE B66	20	66984	2164.8	2x2	-	-	-	-	-	25.13	24.95
CA_[2A]-12A-[66C]	LTE B12	5	23155	713.5	QPSK	1	12	5155	743.5	2x2	LTE B2	20	900	1960	4x4	LTE B66	20	66786	2145	4x4	LTE B66	20	66984	2164.8	4x4	-	-	-	-	-	25.14	24.95
CA_[4A]-4A-12B	LTE B12	5	23155	713.5	QPSK	1	12	5155	743.5	2x2	LTE B12	5	5107	738.7	2x2	LTE B4	20	2175	2132.5	4x4	LTE B4	10	2350	2150	2x2	-	-	-	-	-	25.13	24.95
CA_[4A]-[4A]-12B	LTE B12	5	23155	713.5	QPSK	1	12	5155	743.5	2x2	LTE B12	5	5107	738.7	2x2	LTE B4	20	2175	2132.5	4x4	LTE B4	10	2350	2150	4x4	-	-	-	-	-	25.12	24.95
CA_2A-2A-12A-30A-[66A]	LTE B12	5	23155	713.5	QPSK	1	12	5155	743.5	2x2	LTE B2	20	900	1960	2x2	LTE B2	20	700	1940	2x2	LTE B30	10	9820	2355	2x2	LTE B66	20	66786	2145	4x4	25.08	24.95
CA_2A-2A-12A-[30A]-66A	LTE B12	5	23155	713.5	QPSK	1	12	5155	743.5	2x2	LTE B2	20	900	1960	2x2	LTE B2	20	700	1940	2x2	LTE B30	10	9820	2355	4x4	LTE B66	20	66786	2145	2x2	25.06	24.95
CA_2A-2A-12A-[30A]-[66A]	LTE B12	5	23155	713.5	QPSK	1	12	5155	743.5	2x2	LTE B2	20	900	1960	2x2	LTE B2	20	700	1940	2x2	LTE B30	10	9820	2355	4x4	LTE B66	20	66786	2145	4x4	25.09	24.95
CA_[2A]-2A-12A-30A-66A	LTE B12	5	23155	713.5	QPSK	1	12	5155	743.5	2x2	LTE B2	20	900	1960	4x4	LTE B2	20	700	1940	2x2	LTE B30	10	9820	2355	2x2	LTE B66	20	66786	2145	2x2	25.07	24.95
CA_[2A]-2A-12A-30A-[66A]	LTE B12	5	23155	713.5	QPSK	1	12	5155	743.5	2x2	LTE B2	20	900	1960	4x4	LTE B2	20	700	1940	2x2	LTE B30	10	9820	2355	2x2	LTE B66	20	66786	2145	4x4	25.08	24.95
CA_[2A]-2A-12A-[30A]-66A	LTE B12	5	23155	713.5	QPSK	1	12	5155	743.5	2x2	LTE B2	20	900	1960	4x4	LTE B2	20	700	1940	2x2	LTE B30	10	9820	2355	4x4	LTE B66	20	66786	2145	2x2	25.05	24.95
CA_[2A]-2A-12A-[30A]-[66A]	LTE B12	5	23155	713.5	QPSK	1	12	5155	743.5	2x2	LTE B2	20	900	1960	4x4	LTE B2	20	700	1940	2x2	LTE B30	10	9820	2355	4x4	LTE B66	20	66786	2145	4x4	25.10	24.95
CA_[2A]-[2A]-12A-30A-66A	LTE B12	5	23155	713.5	QPSK	1	12	5155	743.5	2x2	LTE B2	20	900	1960	4x4	LTE B2	20	700	1940	4x4	LTE B30	10	9820	2355	2x2	LTE B66	20	66786	2145	2x2	25.06	24.95
CA_[2A]-[2A]-12A-30A-[66A]	LTE B12	5	23155	713.5	QPSK	1	12	5155	743.5	2x2	LTE B2	20	900	1960	4x4	LTE B2	20	700	1940	4x4	LTE B30	10	9820	2355	2x2	LTE B66	20	66786	2145	4x4	25.11	24.95
CA_[2A]-[2A]-12A-[30A]-66A	LTE B12	5	23155	713.5	QPSK	1	12	5155	743.5	2x2	LTE B2	20	900	1960	4x4	LTE B2	20	700	1940	4x4	LTE B30	10	9820	2355	4x4	LTE B66	20	66786	2145	2x2	25.12	24.95
CA_[2A]-[2A]-12A-[30A]-[66A]	LTE B12	5	23155	713.5	QPSK	1	12	5155	743.5	2x2	LTE B2	20	900	1960	4x4	LTE B2	20	700	1940	4x4	LTE B30	10	9820	2355	4x4	LTE B66	20	66786	2145	4x4	25.08	24.95
CA_2A-2A-12A-[66A]-66A	LTE B12	5	23155	713.5	QPSK	1	12	5155	743.5	2x2	LTE B2	20	900	1960	2x2	LTE B2	20	700	1940	2x2	LTE B66	20	66786	2145	4x4	LTE B66	20	67236	2190	2x2	25.10	24.95
CA_2A-2A-12A-[66A]-[66A]	LTE B12	5	23155	713.5	QPSK	1	12	5155	743.5	2x2	LTE B2	20	900	1960	2x2	LTE B2	20	700	1940	2x2	LTE B66	20	66786	2145	4x4	LTE B66	20	67236	2190	4x4	25.09	24.95
CA_[2A]-2A-12A-66A-66A	LTE B12	5	23155	713.5	QPSK	1	12	5155	743.5	2x2	LTE B2	20	900	1960	4x4	LTE B2	20	700	1940	2x2	LTE B66	20	66786	2145	2x2	LTE B66	20	67236	2190	2x2	25.13	24.95
CA_[2A]-2A-12A-[66A]-66A	LTE B12	5	23155	713.5	QPSK	1	12	5155	743.5	2x2	LTE B2	20	900	1960	4x4	LTE B2	20	700	1940	2x2	LTE B66	20	66786	2145	4x4	LTE B66	20	67236	2190	2x2	25.12	24.95
CA_[2A]-2A-12A-[66A]-[66A]	LTE B12	5	23155	713.5	QPSK	1	12	5155	743.5	2x2	LTE B2	20	900	1960	4x4	LTE B2	20	700	1940	2x2	LTE B66	20	66786	2145	4x4	LTE B66	20	67236	2190	4x4	25.09	24.95
CA_[2A]-[2A]-12A-66A-66A	LTE B12	5	23155	713.5	QPSK	1	12	5155	743.5	2x2	LTE B2	20	900	1960	4x4	LTE B2	20	700	1940	4x4	LTE B66	20	66786	2145	2x2	LTE B66	20	67236	2190	2x2	25.08	24.95
CA_[2A]-[2A]-12A-[66A]-66A	LTE B12	5	23155	713.5	QPSK	1	12	5155	743.5	2x2	LTE B2	20	900	1960	4x4	LTE B2	20	700	1940	4x4	LTE B66	20	66786	2145	4x4	LTE B66	20	67236	2190	2x2	25.11	24.95
CA_[2A]-[2A]-12A-[66A]-[66A]	LTE B12	5	23155	713.5	QPSK	1	12	5155	743.5	2x2	LTE B2	20	900	1960	4x4	LTE B2	20	700	1940	4x4	LTE B66	20	66786	2145	4x4	LTE B66	20	67236	2190	4x4	25.15	24.95
CA_2A-2A-12B-[66A]	LTE B12	5	23155	713.5	QPSK	1	12	5155	743.5	2x2	LTE B12	5	5107	738.7	2x2	LTE B2	20	900	1960	2x2	LTE B2	20	700	1940	2x2	LTE B66	20	66786	2145	4x4	25.06	24.95
CA_[2A]-2A-12B-66A	LTE B12	5	23155	713.5	QPSK	1	12	5155	743.5	2x2	LTE B12	5	5107	738.7	2x2	LTE B2	20	900	1960	4x4	LTE B2	20	700	1940	2x2	LTE B66	20	66786	2145	2x2	25.09	24.95
CA_[2A]-2A-12B-[66A]	LTE B12	5	23155	713.5	QPSK	1	12	5155	743.5	2x2	LTE B12	5	5107	738.7	2x2	LTE B2	20	900	1960	4x4	LTE B2	20	700	1940	2x2	LTE B66	20	66786	2145	4x4	25.11	24.95
CA_[2A]-[2A]-12B-66A	LTE B12	5	23155	713.5	QPSK	1	12	5155	743.5	2x2	LTE B12	5	5107	738.7	2x2	LTE B2	20	900	1960	4x4	LTE B2	20	700	1940	4x4	LTE B66	20	66786	2145	2x2	25.09	24.95
CA_[2A]-[2A]-12B-[66A]	LTE B12	5	23155	713.5	QPSK	1	12	5155	743.5	2x2	LTE B12	5	5107	738.7	2x2	LTE B2	20	900	1960	4x4	LTE B2	20	700	1940	4x4	LTE B66	20	66786	2145	4x4	25.07	24.95
CA_2A-12A-30A-[66A]-66A	LTE B12	5	23155	713.5	QPSK	1	12	5155	743.5	2x2	LTE B2	20	900	1960	2x2	LTE B30	10	9820	2355	2x2	LTE B66	20	66786	2145	4x4	LTE B66	20	67236	2190	2x2	25.12	24.95
CA_2A-12A-30A-[66A]-[66A]	LTE B12	5	23155	713.5	QPSK	1	12	5155	743.5	2x2	LTE B2	20	900	1960	2x2	LTE B30	10	9820	2355	2x2	LTE B66	20	66786	2145	4x4	LTE B66	20	67236	2190	4x4	25.06	24.95
CA_2A-12A-[30A]-66A-66A	LTE B12	5	23155	713.5	QPSK	1	12	5155	743.5	2x2	LTE B2	20	900	1960	2x2	LTE B30	10	9820	2355	4x4	LTE B66	20	66786	2145	2x2	LTE B66	20	67236	2190	2x2	25.09	24.95
CA_2A-12A-[30A]-[66A]-66A	LTE B12	5	23155	713.5	QPSK	1	12	5155	743.5	2x2	LTE B2	20	900	1960	2x2	LTE B30	10	9820	2355	4x4	LTE B66	20	66786	2145	4x4	LTE B66	20	67236	2190	2x2	25.08	24.95
CA_2A-12A-[30A]-[66A]-[66A]	LTE B12	5	23155	713.5	QPSK	1	12	5155	743.5	2x2	LTE B2	20	900	1960	2x2	LTE B30	10	9820	2355	4x4	LTE B66	20	66786	2145	4x4	LTE B66	20	67236	2190	4x4	25.10	24.95
CA_[2A]-12A-30A-66A-66A	LTE B12	5	23155	713.5	QPSK	1	12	5155	743.5	2x2	LTE B2	20	900	1960	4x4	LTE B30	10	9820	2355	2x2	LTE B66	20	66786	2145	2x2	LTE B66	20	67236	2190	2x2	25.07	24.95
CA_[2A]-12A-30A-[66A]-66A	LTE B12	5	23155	713.5	QPSK	1	12	5155	743.5	2x2	LTE B2	20	900	1960	4x4	LTE B30	10	9820	2355	2x2	LTE B66	20	66786	2145	4x4	LTE B66	20	67236	2190	2x2	25.10	24.95
CA_[2A]-12A-30A-[66A]-[66A]	LTE B12	5	23155	713.5	QPSK	1	12	5155	743.5	2x2	LTE B2	20	900	1960	4x4	LTE B30	10	9820	2355	2x2	LTE B66	20	66786	2145	4x4	LTE B66	20	67236	2190	4x4	25.08	24.95
CA_[2A]-12A-[30A]-66A-66A	LTE B12	5	23155	713.5	QPSK	1	12	5155	743.5	2x2	LTE B2	20	900	1960	4x4	LTE B30	10	9820	2355	4x4	LTE B66	20	66786	2145	2x2	LTE B66	20	67236	2190	2x2	25.08	24.95
CA_[2A]-12A-[30A]-[66A]-66A	LTE B12	5	23155	713.5	QPSK	1	12	5155	743.5	2x2	LTE B2	20	900	1960	4x4	LTE B30	10	9820	2355	4x4	LTE B66	20	66786	2145	4x4	LTE B66	20	67236	2190	2x2	25.11	24.95
CA_[2A]-12A-[30A]-[66A]-[66A]	LTE B12	5	23155	713.5	QPSK	1	12	5155	743.5	2x2	LTE B2	20	900	1960	4x4	LTE B30	10	9820	2355	4x4	LTE B66	20	66786	2145	4x4	LTE B66	20	67236	2190	4x4	25.14	24.95
CA_2A-12B-[66A]-66A	LTE B12	5	23155	713.5	QPSK	1	12	5155	743.5	2x2	LTE B12	5	5107	738.7	2x2	LTE B2	20	900	1960	2x2	LTE B66	20	66786	2145	4x4	LTE B66	20	67236	2190	2x2	25.09	24.95
CA_2A-12B-[66A]-[66A]	LTE B12	5	23155	713.5	QPSK	1	12	5155	743.5	2x2	LTE B12	5	5107	738.7	2x2	LTE B2	20	900	1960	2x2	LTE B66	20	66786	2145	4x4	LTE B66	20	67236	2190	4x4	25.10	24.95
CA_[2A]-12B-66A-66A	LTE B12	5	23155	713.5	QPSK	1	12	5155	743.5	2x2	LTE B12	5	5107	738.7	2x2	LTE B2	20	900	1960	4x4	LTE B66	20	66786	2145	2x2	LTE B66	20	67236	2190	2x2	25.05	24.95
CA_[2A]-12B-[66A]-66A	LTE B12	5	23155	713.5	QPSK	1	12	5155	743.5	2x2	LTE B12	5	5107	738.7	2x2	LTE B2	20	900	1960	4x4	LTE B66	20	66786	2145	4x4	LTE B66	20	67236	2190	2x2	25.07	24.95
CA_[2A]-12B-[66A]-[66A]	LTE B12	5	23155	713.5	QPSK	1	12	5155	743.5	2x2	LTE B12	5	5107	738.7	2x2	LTE B2	20	900	1960	4x4	LTE B66	20	66786	2145	4x4	LTE B66	20	67236	2190	4x4	25.08	24.95

© 2021 PCTEST

J.3.4 LTE Band 13 as PCC

Table J-16
Maximum Output Powers

	PCC										SCC 1				
Combination	PCC Band	PCC BW [MHz]	PCC (UL) Ch.	PCC (UL) Freq. [MHz]	Mod.	PCC UL# RB	PCC UL RB Offset	PCC (DL) Ch.	PCC (DL) Freq. [MHz]	DL Ant. Config.	SCC Band	SCC BW [MHz]	SCC (DL) Ch.	SCC (DL) Freq. [MHz]	DL Ant. Config.
CA_2A-[4A]-13A	LTE B13	10	23230	782	QPSK	1	49	5230	751	2x2	LTE B2	20	900	1960	2x2
CA_[2A]-4A-13A	LTE B13	10	23230	782	QPSK	1	49	5230	751	2x2	LTE B2	20	900	1960	4x4
CA_[2A]-[4A]-13A	LTE B13	10	23230	782	QPSK	1	49	5230	751	2x2	LTE B2	20	900	1960	4x4
CA_[4A]-4A-13A	LTE B13	10	23230	782	QPSK	1	49	5230	751	2x2	LTE B4	20	2175	2132.5	4x4
CA_[4A]-[4A]-13A	LTE B13	10	23230	782	QPSK	1	49	5230	751	2x2	LTE B4	20	2175	2132.5	4x4
CA_2A-13A-[66C]	LTE B13	10	23230	782	QPSK	1	49	5230	751	2x2	LTE B2	20	900	1960	2x2
CA_[2A]-13A-66C	LTE B13	10	23230	782	QPSK	1	49	5230	751	2x2	LTE B2	20	900	1960	4x4
CA_[2A]-13A-[66C]	LTE B13	10	23230	782	QPSK	1	49	5230	751	2x2	LTE B2	20	900	1960	4x4
CA_13A-48A-[66B]	LTE B13	10	23230	782	QPSK	1	49	5230	751	2x2	LTE B48	20	55990	3625	2x2
CA_13A-[48A]-66B	LTE B13	10	23230	782	QPSK	1	49	5230	751	2x2	LTE B48	20	55990	3625	4x4
CA_13A-[48A]-[66B]	LTE B13	10	23230	782	QPSK	1	49	5230	751	2x2	LTE B48	20	55990	3625	4x4
CA_13A-48A-[66C]	LTE B13	10	23230	782	QPSK	1	49	5230	751	2x2	LTE B48	20	55990	3625	2x2
CA_13A-[48A]-66C	LTE B13	10	23230	782	QPSK	1	49	5230	751	2x2	LTE B48	20	55990	3625	4x4
CA_13A-[48A]-[66C]	LTE B13	10	23230	782	QPSK	1	49	5230	751	2x2	LTE B48	20	55990	3625	4x4
CA_2A-2A-13A-[66A]-66A	LTE B13	10	23230	782	QPSK	1	49	5230	751	2x2	LTE B2	20	900	1960	2x2
CA_2A-2A-13A-[66A]-[66A]	LTE B13	10	23230	782	QPSK	1	49	5230	751	2x2	LTE B2	20	900	1960	2x2
CA_[2A]-2A-13A-66A-66A	LTE B13	10	23230	782	QPSK	1	49	5230	751	2x2	LTE B2	20	900	1960	4x4
CA_[2A]-2A-13A-[66A]-66A	LTE B13	10	23230	782	QPSK	1	49	5230	751	2x2	LTE B2	20	900	1960	4x4
CA_[2A]-2A-13A-[66A]-[66A]	LTE B13	10	23230	782	QPSK	1	49	5230	751	2x2	LTE B2	20	900	1960	4x4
CA_[2A]-[2A]-13A-66A-66A	LTE B13	10	23230	782	QPSK	1	49	5230	751	2x2	LTE B2	20	900	1960	4x4
CA_[2A]-[2A]-13A-[66A]-66A	LTE B13	10	23230	782	QPSK	1	49	5230	751	2x2	LTE B2	20	900	1960	4x4
CA_[2A]-[2A]-13A-[66A]-[66A]	LTE B13	10	23230	782	QPSK	1	49	5230	751	2x2	LTE B2	20	900	1960	4x4
CA_2A-2A-13A-[66B]	LTE B13	10	23230	782	QPSK	1	49	5230	751	2x2	LTE B2	20	900	1960	2x2
CA_[2A]-2A-13A-66B	LTE B13	10	23230	782	QPSK	1	49	5230	751	2x2	LTE B2	20	900	1960	4x4
CA_[2A]-2A-13A-[66B]	LTE B13	10	23230	782	QPSK	1	49	5230	751	2x2	LTE B2	20	900	1960	4x4
CA_[2A]-[2A]-13A-66B	LTE B13	10	23230	782	QPSK	1	49	5230	751	2x2	LTE B2	20	900	1960	4x4
CA_[2A]-[2A]-13A-[66B]	LTE B13	10	23230	782	QPSK	1	49	5230	751	2x2	LTE B2	20	900	1960	4x4
CA_2A-13A-46A-[66A]-66A	LTE B13	10	23230	782	QPSK	1	49	5230	751	2x2	LTE B2	20	900	1960	2x2
CA_2A-13A-46A-[66A]-[66A]	LTE B13	10	23230	782	QPSK	1	49	5230	751	2x2	LTE B2	20	900	1960	2x2
CA_[2A]-13A-46A-66A-66A	LTE B13	10	23230	782	QPSK	1	49	5230	751	2x2	LTE B2	20	900	1960	4x4
CA_[2A]-13A-46A-[66A]-66A	LTE B13	10	23230	782	QPSK	1	49	5230	751	2x2	LTE B2	20	900	1960	4x4
CA_[2A]-13A-46A-[66A]-[66A]	LTE B13	10	23230	782	QPSK	1	49	5230	751	2x2	LTE B2	20	900	1960	4x4
CA_2A-13A-48A-48A-[66A]	LTE B13	10	23230	782	QPSK	1	49	5230	751	2x2	LTE B2	20	900	1960	2x2
CA_2A-13A-[48A]-48A-66A	LTE B13	10	23230	782	QPSK	1	49	5230	751	2x2	LTE B2	20	900	1960	2x2
CA_2A-13A-[48A]-48A-[66A]	LTE B13	10	23230	782	QPSK	1	49	5230	751	2x2	LTE B2	20	900	1960	2x2
CA_2A-13A-[48A]-[48A]-66A	LTE B13	10	23230	782	QPSK	1	49	5230	751	2x2	LTE B2	20	900	1960	2x2
CA_2A-13A-[48A]-[48A]-[66A]	LTE B13	10	23230	782	QPSK	1	49	5230	751	2x2	LTE B2	20	900	1960	2x2
CA_[2A]-13A-48A-48A-66A	LTE B13	10	23230	782	QPSK	1	49	5230	751	2x2	LTE B2	20	900	1960	4x4
CA_[2A]-13A-48A-48A-[66A]	LTE B13	10	23230	782	QPSK	1	49	5230	751	2x2	LTE B2	20	900	1960	4x4
CA_[2A]-13A-[48A]-48A-66A	LTE B13	10	23230	782	QPSK	1	49	5230	751	2x2	LTE B2	20	900	1960	4x4
CA_[2A]-13A-[48A]-48A-[66A]	LTE B13	10	23230	782	QPSK	1	49	5230	751	2x2	LTE B2	20	900	1960	4x4
CA_[2A]-13A-[48A]-[48A]-66A	LTE B13	10	23230	782	QPSK	1	49	5230	751	2x2	LTE B2	20	900	1960	4x4
CA_[2A]-13A-[48A]-[48A]-[66A]	LTE B13	10	23230	782	QPSK	1	49	5230	751	2x2	LTE B2	20	900	1960	4x4
CA_2A-13A-48A-[48C]	LTE B13	10	23230	782	QPSK	1	49	5230	751	2x2	LTE B2	20	900	1960	2x2
CA_2A-13A-[48A]-48C	LTE B13	10	23230	782	QPSK	1	49	5230	751	2x2	LTE B2	20	900	1960	2x2
CA_2A-13A-[48A]-[48C]	LTE B13	10	23230	782	QPSK	1	49	5230	751	2x2	LTE B2	20	900	1960	2x2
CA_[2A]-13A-48A-48C	LTE B13	10	23230	782	QPSK	1	49	5230	751	2x2	LTE B2	20	900	1960	4x4
CA_[2A]-13A-48A-[48C]	LTE B13	10	23230	782	QPSK	1	49	5230	751	2x2	LTE B2	20	900	1960	4x4
CA_[2A]-13A-[48A]-48C	LTE B13	10	23230	782	QPSK	1	49	5230	751	2x2	LTE B2	20	900	1960	4x4
CA_[2A]-13A-[48A]-[48C]	LTE B13	10	23230	782	QPSK	1	49	5230	751	2x2	LTE B2	20	900	1960	4x4
CA_2A-13A-48C-[66A]	LTE B13	10	23230	782	QPSK	1	49	5230	751	2x2	LTE B2	20	900	1960	2x2
CA_2A-13A-[48C]-66A	LTE B13	10	23230	782	QPSK	1	49	5230	751	2x2	LTE B2	20	900	1960	2x2
CA_2A-13A-[48C]-[66A]	LTE B13	10	23230	782	QPSK	1	49	5230	751	2x2	LTE B2	20	900	1960	2x2
CA_[2A]-13A-48C-66A	LTE B13	10	23230	782	QPSK	1	49	5230	751	2x2	LTE B2	20	900	1960	4x4
CA_[2A]-13A-48C-[66A]	LTE B13	10	23230	782	QPSK	1	49	5230	751	2x2	LTE B2	20	900	1960	4x4
CA_[2A]-13A-[48C]-66A	LTE B13	10	23230	782	QPSK	1	49	5230	751	2x2	LTE B2	20	900	1960	4x4
CA_[2A]-13A-[48C]-[66A]	LTE B13	10	23230	782	QPSK	1	49	5230	751	2x2	LTE B2	20	900	1960	4x4
CA_2A-13A-[48D]	LTE B13	10	23230	782	QPSK	1	49	5230	751	2x2	LTE B2	20	900	1960	2x2
CA_[2A]-13A-48D	LTE B13	10	23230	782	QPSK	1	49	5230	751	2x2	LTE B2	20	900	1960	4x4
CA_[2A]-13A-[48D]	LTE B13	10	23230	782	QPSK	1	49	5230	751	2x2	LTE B2	20	900	1960	4x4
CA_2A-13A-66A-[66B]	LTE B13	10	23230	782	QPSK	1	49	5230	751	2x2	LTE B2	20	900	1960	2x2
CA_2A-13A-[66A]-66B	LTE B13	10	23230	782	QPSK	1	49	5230	751	2x2	LTE B2	20	900	1960	2x2
CA_2A-13A-[66A]-[66B]	LTE B13	10	23230	782	QPSK	1	49	5230	751	2x2	LTE B2	20	900	1960	2x2
CA_[2A]-13A-66A-66B	LTE B13	10	23230	782	QPSK	1	49	5230	751	2x2	LTE B2	20	900	1960	4x4
CA_[2A]-13A-66A-[66B]	LTE B13	10	23230	782	QPSK	1	49	5230	751	2x2	LTE B2	20	900	1960	4x4
CA_[2A]-13A-[66A]-66B	LTE B13	10	23230	782	QPSK	1	49	5230	751	2x2	LTE B2	20	900	1960	4x4
CA_[2A]-13A-[66A]-[66B]	LTE B13	10	23230	782	QPSK	1	49	5230	751	2x2	LTE B2	20	900	1960	4x4
CA_13A-48A-48C-[66A]	LTE B13	10	23230	782	QPSK	1	49	5230	751	2x2	LTE B48	20	55990	3625	2x2
CA_13A-48A-[48C]-66A	LTE B13	10	23230	782	QPSK	1	49	5230	751	2x2	LTE B48	20	55990	3625	2x2
CA_13A-48A-[48C]-[66A]	LTE B13	10	23230	782	QPSK	1	49	5230	751	2x2	LTE B48	20	55990	3625	2x2
CA_13A-[48A]-48C-66A	LTE B13	10	23230	782	QPSK	1	49	5230	751	2x2	LTE B48	20	55990	3625	4x4
CA_13A-[48A]-48C-[66A]	LTE B13	10	23230	782	QPSK	1	49	5230	751	2x2	LTE B48	20	55990	3625	4x4
CA_13A-[48A]-[48C]-66A	LTE B13	10	23230	782	QPSK	1	49	5230	751	2x2	LTE B48	20	55990	3625	4x4
CA_13A-[48A]-[48C]-[66A]	LTE B13	10	23230	782	QPSK	1	49	5230	751	2x2	LTE B48	20	55990	3625	4x4
CA_13A-48A-[48D]	LTE B13	10	23230	782	QPSK	1	49	5230	751	2x2	LTE B48	20	55990	3625	2x2
CA_13A-[48A]-48D	LTE B13	10	23230	782	QPSK	1	49	5230	751	2x2	LTE B48	20	55990	3625	4x4
CA_13A-[48A]-[48D]	LTE B13	10	23230	782	QPSK	1	49	5230	751	2x2	LTE B48	20	55990	3625	4x4
CA_13A-[48C]-48C	LTE B13	10	23230	782	QPSK	1	49	5230	751	2x2	LTE B48	20	55990	3625	4x4
CA_13A-[48C]-[48C]	LTE B13	10	23230	782	QPSK	1	49	5230	751	2x2	LTE B48	20	55990	3625	4x4
CA_13A-48D-[66A]	LTE B13	10	23230	782	QPSK	1	49	5230	751	2x2	LTE B48	20	55990	3625	2x2
CA_13A-[48D]-66A	LTE B13	10	23230	782	QPSK	1	49	5230	751	2x2	LTE B48	20	55990	3625	4x4
CA_13A-[48D]-[66A]	LTE B13	10	23230	782	QPSK	1	49	5230	751	2x2	LTE B48	20	55990	3625	4x4
CA_2A-13A-46C-[66A]-66A	LTE B13	10	23230	782	QPSK	1	49	5230	751	2x2	LTE B2	20	900	1960	2x2
CA_2A-13A-46C-[66A]-[66A]	LTE B13	10	23230	782	QPSK	1	49	5230	751	2x2	LTE B2	20	900	1960	2x2
CA_[2A]-13A-46C-66A-66A	LTE B13	10	23230	782	QPSK	1	49	5230	751	2x2	LTE B2	20	900	1960	4x4
CA_[2A]-13A-46C-[66A]-66A	LTE B13	10	23230	782	QPSK	1	49	5230	751	2x2	LTE B2	20	900	1960	4x4
CA_[2A]-13A-46C-[66A]-[66A]	LTE B13	10	23230	782	QPSK	1	49	5230	751	4x4	LTE B2	20	900	1960	4x4
CA_[2A]-13A-46E	LTE B13	10	23230	782	QPSK	1	49	5230	751	2x2	LTE B2	20	900	1960	4x4
CA_13A-46E-[66A]	LTE B13	10	23230	782	QPSK	1	49	5230	751	2x2	LTE B46	20	50665	5537.5	2x2
CA_13A-48E-[66A]	LTE B13	10	23230	782	QPSK	1	49	5230	751	2x2	LTE B48	20	55990	3625	2x2
CA_13A-[48E]-66A	LTE B13	10	23230	782	QPSK	1	49	5230	751	2x2	LTE B48	20	55990	3625	4x4
CA_2A-13A-46D-[66A]-66A	LTE B13	10	23230	782	QPSK	1	49	5230	751	2x2	LTE B2	20	900	1960	2x2
CA_2A-13A-46D-[66A]-[66A]	LTE B13	10	23230	782	QPSK	1	49	5230	751	2x2	LTE B2	20	900	1960	2x2
CA_[2A]-13A-46D-66A-66A	LTE B13	10	23230	782	QPSK	1	49	5230	751	2x2	LTE B2	20	900	1960	4x4
CA_[2A]-13A-46D-[66A]-66A	LTE B13	10	23230	782	QPSK	1	49	5230	751	2x2	LTE B2	20	900	1960	4x4
CA_[2A]-13A-46D-[66A]-[66A]	LTE B13	10	23230	782	QPSK	1	49	5230	751	2x2	LTE B2	20	900	1960	4x4

	SCC 2					SCC 3					SCC 4					SCC 5					SCC 6					Power	
Combination	SCC Band	SCC BW [MHz]	SCC (DL) Ch.	SCC (DL) Freq. [MHz]	DL Ant. Config.	SCC Band	SCC BW [MHz]	SCC (DL) Ch.	SCC (DL) Freq. [MHz]	DL Ant. Config.	SCC Band	SCC BW [MHz]	SCC (DL) Ch.	SCC (DL) Freq. [MHz]	DL Ant. Config.	SCC Band	SCC BW [MHz]	SCC (DL) Ch.	SCC (DL) Freq. [MHz]	DL Ant. Config.	SCC Band	SCC BW [MHz]	SCC (DL) Ch.	SCC (DL) Freq. [MHz]	DL Ant. Config.	LTE Tx.Power with DL CA Enabled	LTE Single Carrier Tx Power (dBm)
CA_2A-[4A]-13A	LTE B4	20	2175	2132.5	4x4	-	-	-	-	-	-	-	-	-	-	-	-	-	-	-	-	-	-	-	-	24.83	24.78
CA_[2A]-4A-13A	LTE B4	20	2175	2132.5	2x2	-	-	-	-	-	-	-	-	-	-	-	-	-	-	-	-	-	-	-	-	24.86	24.78
CA_[2A]-[4A]-13A	LTE B4	20	2175	2132.5	4x4	-	-	-	-	-	-	-	-	-	-	-	-	-	-	-	-	-	-	-	-	24.84	24.78
CA_[4A]-4A-13A	LTE B4	10	2350	2150	2x2	-	-	-	-	-	-	-	-	-	-	-	-	-	-	-	-	-	-	-	-	24.83	24.78
CA_[4A]-[4A]-13A	LTE B4	10	2350	2150	4x4	-	-	-	-	-	-	-	-	-	-	-	-	-	-	-	-	-	-	-	-	24.85	24.78
CA_2A-13A-[66C]	LTE B66	20	66786	2145	4x4	LTE B66	20	66984	2164.8	4x4	-	-	-	-	-	-	-	-	-	-	-	-	-	-	-	24.81	24.78
CA_[2A]-13A-66C	LTE B66	20	66786	2145	2x2	LTE B66	20	66984	2164.8	2x2	-	-	-	-	-	-	-	-	-	-	-	-	-	-	-	24.84	24.78
CA_[2A]-13A-[66C]	LTE B66	20	66786	2145	4x4	LTE B66	20	66984	2164.8	4x4	-	-	-	-	-	-	-	-	-	-	-	-	-	-	-	24.80	24.78
CA_13A-48A-[66B]	LTE B66	15	66786	2145	4x4	LTE B66	5	66879	2154.3	4x4	-	-	-	-	-	-	-	-	-	-	-	-	-	-	-	24.86	24.78
CA_13A-[48A]-66B	LTE B66	15	66786	2145	2x2	LTE B66	5	66879	2154.3	2x2	-	-	-	-	-	-	-	-	-	-	-	-	-	-	-	24.85	24.78
CA_13A-[48A]-[66B]	LTE B66	15	66786	2145	4x4	LTE B66	5	66879	2154.3	4x4	-	-	-	-	-	-	-	-	-	-	-	-	-	-	-	24.82	24.78
CA_13A-48A-[66C]	LTE B66	20	66786	2145	4x4	LTE B66	20	66984	2164.8	4x4	-	-	-	-	-	-	-	-	-	-	-	-	-	-	-	24.85	24.78
CA_13A-[48A]-66C	LTE B66	20	66786	2145	2x2	LTE B66	20	66984	2164.8	2x2	-	-	-	-	-	-	-	-	-	-	-	-	-	-	-	24.83	24.78
CA_13A-[48A]-[66C]	LTE B66	20	66786	2145	4x4	LTE B66	20	66984	2164.8	4x4	-	-	-	-	-	-	-	-	-	-	-	-	-	-	-	24.85	24.78
CA_2A-2A-13A-[66A]-66A	LTE B2	20	700	1940	2x2	LTE B66	20	66786	2145	4x4	LTE B66	20	67236	2190	2x2	-	-	-	-	-	-	-	-	-	-	24.82	24.78
CA_2A-2A-13A-[66A]-[66A]	LTE B2	20	700	1940	2x2	LTE B66	20	66786	2145	4x4	LTE B66	20	67236	2190	4x4	-	-	-	-	-	-	-	-	-	-	24.84	24.78
CA_[2A]-2A-13A-66A-66A	LTE B2	20	700	1940	2x2	LTE B66	20	66786	2145	2x2	LTE B66	20	67236	2190	2x2	-	-	-	-	-	-	-	-	-	-	24.81	24.78
CA_[2A]-2A-13A-[66A]-66A	LTE B2	20	700	1940	2x2	LTE B66	20	66786	2145	4x4	LTE B66	20	67236	2190	2x2	-	-	-	-	-	-	-	-	-	-	24.83	24.78
CA_[2A]-2A-13A-[66A]-[66A]	LTE B2	20	700	1940	2x2	LTE B66	20	66786	2145	4x4	LTE B66	20	67236	2190	4x4	-	-	-	-	-	-	-	-	-	-	24.85	24.78
CA_[2A]-[2A]-13A-66A-66A	LTE B2	20	700	1940	4x4	LTE B66	20	66786	2145	2x2	LTE B66	20	67236	2190	2x2	-	-	-	-	-	-	-	-	-	-	24.84	24.78
CA_[2A]-[2A]-13A-[66A]-66A	LTE B2	20	700	1940	4x4	LTE B66	20	66786	2145	4x4	LTE B66	20	67236	2190	2x2	-	-	-	-	-	-	-	-	-	-	24.83	24.78
CA_[2A]-[2A]-13A-[66A]-[66A]	LTE B2	20	700	1940	4x4	LTE B66	20	66786	2145	4x4	LTE B66	20	67236	2190	4x4	-	-	-	-	-	-	-	-	-	-	24.86	24.78
CA_2A-2A-13A-[66B]	LTE B2	20	700	1940	2x2	LTE B66	15	66786	2145	4x4	LTE B66	5	66879	2154.3	4x4	-	-	-	-	-	-	-	-	-	-	24.80	24.78
CA_[2A]-2A-13A-66B	LTE B2	20	700	1940	2x2	LTE B66	15	66786	2145	2x2	LTE B66	5	66879	2154.3	2x2	-	-	-	-	-	-	-	-	-	-	24.81	24.78
CA_[2A]-2A-13A-[66B]	LTE B2	20	700	1940	2x2	LTE B66	15	66786	2145	4x4	LTE B66	5	66879	2154.3	4x4	-	-	-	-	-	-	-	-	-	-	24.79	24.78
CA_[2A]-[2A]-13A-66B	LTE B2	20	700	1940	4x4	LTE B66	15	66786	2145	2x2	LTE B66	5	66879	2154.3	2x2	-	-	-	-	-	-	-	-	-	-	24.80	24.78
CA_[2A]-[2A]-13A-[66B]	LTE B2	20	700	1940	4x4	LTE B66	15	66786	2145	4x4	LTE B66	5	66879	2154.3	4x4	-	-	-	-	-	-	-	-	-	-	24.82	24.78
CA_2A-13A-46A-[66A]-66A	LTE B46	20	50665	5537.5	2x2	LTE B66	20	66786	2145	4x4	LTE B66	20	67236	2190	2x2	-	-	-	-	-	-	-	-	-	-	24.82	24.78
CA_2A-13A-46A-[66A]-[66A]	LTE B46	20	50665	5537.5	2x2	LTE B66	20	66786	2145	4x4	LTE B66	20	67236	2190	4x4	-	-	-	-	-	-	-	-	-	-	24.82	24.78
CA_[2A]-13A-46A-66A-66A	LTE B46	20	50665	5537.5	2x2	LTE B66	20	66786	2145	2x2	LTE B66	20	67236	2190	2x2	-	-	-	-	-	-	-	-	-	-	24.84	24.78
CA_[2A]-13A-46A-[66A]-66A	LTE B46	20	50665	5537.5	2x2	LTE B66	20	66786	2145	4x4	LTE B66	20	67236	2190	2x2	-	-	-	-	-	-	-	-	-	-	24.83	24.78
CA_[2A]-13A-46A-[66A]-[66A]	LTE B46	20	50665	5537.5	2x2	LTE B66	20	66786	2145	4x4	LTE B66	20	67236	2190	4x4	-	-	-	-	-	-	-	-	-	-	24.79	24.78
CA_2A-13A-48A-48A-[66A]	LTE B48	20	55990	3625	2x2	LTE B48	20	56640	3690	2x2	LTE B66	20	66786	2145	4x4	-	-	-	-	-	-	-	-	-	-	24.80	24.78
CA_2A-13A-[48A]-48A-66A	LTE B48	20	55990	3625	4x4	LTE B48	20	56640	3690	2x2	LTE B66	20	66786	2145	2x2	-	-	-	-	-	-	-	-	-	-	24.81	24.78
CA_2A-13A-[48A]-48A-[66A]	LTE B48	20	55990	3625	4x4	LTE B48	20	56640	3690	2x2	LTE B66	20	66786	2145	4x4	-	-	-	-	-	-	-	-	-	-	24.80	24.78
CA_2A-13A-[48A]-[48A]-66A	LTE B48	20	55990	3625	4x4	LTE B48	20	56640	3690	4x4	LTE B66	20	66786	2145	2x2	-	-	-	-	-	-	-	-	-	-	24.82	24.78
CA_2A-13A-[48A]-[48A]-[66A]	LTE B48	20	55990	3625	4x4	LTE B48	20	56640	3690	4x4	LTE B66	20	66786	2145	4x4	-	-	-	-	-	-	-	-	-	-	24.81	24.78
CA_[2A]-13A-48A-48A-66A	LTE B48	20	55990	3625	2x2	LTE B48	20	56640	3690	2x2	LTE B66	20	66786	2145	2x2	-	-	-	-	-	-	-	-	-	-	24.83	24.78
CA_[2A]-13A-48A-48A-[66A]	LTE B48	20	55990	3625	2x2	LTE B48	20	56640	3690	2x2	LTE B66	20	66786	2145	4x4	-	-	-	-	-	-	-	-	-	-	24.80	24.78
CA_[2A]-13A-[48A]-48A-66A	LTE B48	20	55990	3625	4x4	LTE B48	20	56640	3690	2x2	LTE B66	20	66786	2145	2x2	-	-	-	-	-	-	-	-	-	-	24.82	24.78
CA_[2A]-13A-[48A]-48A-[66A]	LTE B48	20	55990	3625	4x4	LTE B48	20	56640	3690	2x2	LTE B66	20	66786	2145	4x4	-	-	-	-	-	-	-	-	-	-	24.84	24.78
CA_[2A]-13A-[48A]-[48A]-66A	LTE B48	20	55990	3625	4x4	LTE B48	20	56640	3690	4x4	LTE B66	20	66786	2145	2x2	-	-	-	-	-	-	-	-	-	-	24.83	24.78
CA_[2A]-13A-[48A]-[48A]-[66A]	LTE B48	20	55990	3625	4x4	LTE B48	20	56640	3690	4x4	LTE B66	20	66786	2145	4x4	-	-	-	-	-	-	-	-	-	-	24.85	24.78
CA_2A-13A-48A-[48C]	LTE B48	20	55990	3625	2x2	LTE B48	20	56640	3690	4x4	LTE B48	20	56442	3670.2	4x4	-	-	-	-	-	-	-	-	-	-	24.78	24.78
CA_2A-13A-[48A]-48C	LTE B48	20	55990	3625	4x4	LTE B48	20	56640	3690	2x2	LTE B48	20	56442	3670.2	2x2	-	-	-	-	-	-	-	-	-	-	24.80	24.78
CA_2A-13A-[48A]-[48C]	LTE B48	20	55990	3625	4x4	LTE B48	20	56640	3690	4x4	LTE B48	20	56442	3670.2	4x4	-	-	-	-	-	-	-	-	-	-	24.79	24.78
CA_[2A]-13A-48A-48C	LTE B48	20	55990	3625	2x2	LTE B48	20	56640	3690	2x2	LTE B48	20	56442	3670.2	2x2	-	-	-	-	-	-	-	-	-	-	24.82	24.78
CA_[2A]-13A-48A-[48C]	LTE B48	20	55990	3625	2x2	LTE B48	20	56640	3690	4x4	LTE B48	20	56442	3670.2	4x4	-	-	-	-	-	-	-	-	-	-	24.81	24.78
CA_[2A]-13A-[48A]-48C	LTE B48	20	55990	3625	4x4	LTE B48	20	56640	3690	2x2	LTE B48	20	56442	3670.2	2x2	-	-	-	-	-	-	-	-	-	-	24.79	24.78
CA_[2A]-13A-[48A]-[48C]	LTE B48	20	55990	3625	4x4	LTE B48	20	56640	3690	4x4	LTE B48	20	56442	3670.2	4x4	-	-	-	-	-	-	-	-	-	-	24.82	24.78
CA_2A-13A-48C-[66A]	LTE B48	20	55990	3625	2x2	LTE B48	20	56188	3644.8	2x2	LTE B66	20	66786	2145	4x4	-	-	-	-	-	-	-	-	-	-	24.81	24.78
CA_2A-13A-[48C]-66A	LTE B48	20	55990	3625	4x4	LTE B48	20	56188	3644.8	4x4	LTE B66	20	66786	2145	2x2	-	-	-	-	-	-	-	-	-	-	24.80	24.78
CA_2A-13A-[48C]-[66A]	LTE B48	20	55990	3625	4x4	LTE B48	20	56188	3644.8	4x4	LTE B66	20	66786	2145	4x4	-	-	-	-	-	-	-	-	-	-	24.83	24.78
CA_[2A]-13A-48C-66A	LTE B48	20	55990	3625	2x2	LTE B48	20	56188	3644.8	2x2	LTE B66	20	66786	2145	2x2	-	-	-	-	-	-	-	-	-	-	24.78	24.78
CA_[2A]-13A-48C-[66A]	LTE B48	20	55990	3625	2x2	LTE B48	20	56188	3644.8	2x2	LTE B66	20	66786	2145	4x4	-	-	-	-	-	-	-	-	-	-	24.79	24.78
CA_[2A]-13A-[48C]-66A	LTE B48	20	55990	3625	4x4	LTE B48	20	56188	3644.8	4x4	LTE B66	20	66786	2145	2x2	-	-	-	-	-	-	-	-	-	-	24.83	24.78
CA_[2A]-13A-[48C]-[66A]	LTE B48	20	55990	3625	4x4	LTE B48	20	56188	3644.8	4x4	LTE B66	20	66786	2145	4x4	-	-	-	-	-	-	-	-	-	-	24.80	24.78
CA_2A-13A-[48D]	LTE B48	20	55990	3625	4x4	LTE B48	20	56188	3644.8	4x4	LTE B48	20	56386	3664.6	4x4	-	-	-	-	-	-	-	-	-	-	24.79	24.78
CA_[2A]-13A-48D	LTE B48	20	55990	3625	2x2	LTE B48	20	56188	3644.8	2x2	LTE B48	20	56386	3664.6	2x2	-	-	-	-	-	-	-	-	-	-	24.81	24.78
CA_[2A]-13A-[48D]	LTE B48	20	55990	3625	4x4	LTE B48	20	56188	3644.8	4x4	LTE B48	20	56386	3664.6	4x4	-	-	-	-	-	-	-	-	-	-	24.82	24.78
CA_2A-13A-66A-[66B]	LTE B66	20	66786	2145	2x2	LTE B66	5	67168	2183.2	4x4	LTE B66	15	67261	2192.5	4x4	-	-	-	-	-	-	-	-	-	-	24.79	24.78
CA_2A-13A-[66A]-66B	LTE B66	20	66786	2145	4x4	LTE B66	5	67168	2183.2	2x2	LTE B66	15	67261	2192.5	2x2	-	-	-	-	-	-	-	-	-	-	24.78	24.78
CA_2A-13A-[66A]-[66B]	LTE B66	20	66786	2145	4x4	LTE B66	5	67168	2183.2	4x4	LTE B66	15	67261	2192.5	4x4	-	-	-	-	-	-	-	-	-	-	24.80	24.78
CA_[2A]-13A-66A-66B	LTE B66	20	66786	2145	2x2	LTE B66	5	67168	2183.2	2x2	LTE B66	15	67261	2192.5	2x2	-	-	-	-	-	-	-	-	-	-	24.81	24.78
CA_[2A]-13A-66A-[66B]	LTE B66	20	66786	2145	2x2	LTE B66	5	67168	2183.2	4x4	LTE B66	15	67261	2192.5	4x4	-	-	-	-	-	-	-	-	-	-	24.79	24.78
CA_[2A]-13A-[66A]-66B	LTE B66	20	66786	2145	4x4	LTE B66	5	67168	2183.2	2x2	LTE B66	15	67261	2192.5	2x2	-	-	-	-	-	-	-	-	-	-	24.81	24.78
CA_[2A]-13A-[66A]-[66B]	LTE B66	20	66786	2145	4x4	LTE B66	5	67168	2183.2	4x4	LTE B66	15	67261	2192.5	4x4	-	-	-	-	-	-	-	-	-	-	24.78	24.78
CA_13A-48A-48C-[66A]	LTE B48	20	55340	3560	2x2	LTE B48	20	55538	3579.8	2x2	LTE B66	20	66786	2145	4x4	-	-	-	-	-	-	-	-	-	-	24.83	24.78
CA_13A-48A-[48C]-66A	LTE B48	20	55340	3560	4x4	LTE B48	20	55538	3579.8	4x4	LTE B66	20	66786	2145	2x2	-	-	-	-	-	-	-	-	-	-	24.79	24.78
CA_13A-48A-[48C]-[66A]	LTE B48	20	55340	3560	4x4	LTE B48	20	55538	3579.8	4x4	LTE B66	20	66786	2145	4x4	-	-	-	-	-	-	-	-	-	-	24.82	24.78
CA_13A-[48A]-48C-66A	LTE B48	20	55340	3560	2x2	LTE B48	20	55538	3579.8	2x2	LTE B66	20	66786	2145	2x2	-	-	-	-	-	-	-	-	-	-	24.81	24.78
CA_13A-[48A]-48C-[66A]	LTE B48	20	55340	3560	2x2	LTE B48	20	55538	3579.8	2x2	LTE B66	20	66786	2145	4x4	-	-	-	-	-	-	-	-	-	-	24.79	24.78
CA_13A-[48A]-[48C]-66A	LTE B48	20	56640	3690	4x4	LTE B48	20	56442	3670.2	4x4	LTE B66	20	66786	2145	2x2	-	-	-	-	-	-	-	-	-	-	24.78	24.78
CA_13A-[48A]-[48C]-[66A]	LTE B48	20	55340	3560	4x4	LTE B48	20	55538	3579.8	4x4	LTE B66	20	66786	2145	4x4	-	-	-	-	-	-	-	-	-	-	24.97	24.78
CA_13A-48A-[48D]	LTE B48	20	55340	3560	4x4	LTE B48	20	55538	3579.8	4x4	LTE B48	20	55736	3599.6	4x4	-	-	-	-	-	-	-	-	-	-	24.79	24.78
CA_13A-[48A]-48D	LTE B48	20	55340	3560	2x2	LTE B48	20	55538	3579.8	2x2	LTE B48	20	55736	3599.6	2x2	-	-	-	-	-	-	-	-	-	-	24.81	24.78
CA_13A-[48A]-[48D]	LTE B48	20	55340	3560	4x4	LTE B48	20	55538	3579.8	4x4	LTE B48	20	55736	3599.6	4x4	-	-	-	-	-	-	-	-	-	-	24.78	24.78
CA_13A-[48C]-48C	LTE B48	20	56188	3644.8	4x4	LTE B48	20	55340	3560	2x2	LTE B48	20	55538	3579.8	2x2	-	-	-	-	-	-	-	-	-	-	24.81	24.78
CA_13A-[48C]-[48C]	LTE B48	20	56188	3644.8	4x4	LTE B48	20	55340	3560	4x4	LTE B48	20	55538	3579.8	4x4	-	-	-	-	-	-	-	-	-	-	24.80	24.78
CA_13A-48D-[66A]	LTE B48	20	56188	3644.8	2x2	LTE B48	20	56386	3664.6	2x2	LTE B66	20	66786	2145	4x4	-	-	-	-	-	-	-	-	-	-	24.82	24.78
CA_13A-[48D]-66A	LTE B48	20	56188	3644.8	4x4	LTE B48	20	56386	3664.6	4x4	LTE B66	20	66786	2145	2x2	-	-	-	-	-	-	-	-	-	-	24.81	24.78
CA_13A-[48D]-[66A]	LTE B48	20	56188	3644.8	4x4	LTE B48	20	56386	3664.6	4x4	LTE B66	20	66786	2145	4x4	-	-	-	-	-	-	-	-	-	-	24.79	24.78
CA_2A-13A-46C-[66A]-66A	LTE B46	20	50665	5537.5	2x2	LTE B46	20	50467	5517.7	2x2	LTE B66	20	66786	2145	4x4	LTE B66	20	67236	2190	2x2	-	-	-	-	-	24.83	24.78
CA_2A-13A-46C-[66A]-[66A]	LTE B46	20	50665	5537.5	2x2	LTE B46	20	50467	5517.7	2x2	LTE B66	20	66786	2145	4x4	LTE B66	20	67236	2190	4x4	-	-	-	-	-	24.89	24.78
CA_[2A]-13A-46C-66A-66A	LTE B46	20	50665	5537.5	2x2	LTE B46	20	50467	5517.7	2x2	LTE B66	20	66786	2145	2x2	LTE B66	20	67236	2190	2x2	-	-	-	-	-	24.79	24.78
CA_[2A]-13A-46C-[66A]-66A	LTE B46	20	50665	5537.5	2x2	LTE B46	20	50467	5517.7	2x2	LTE B66	20	66786	2145	4x4	LTE B66	20	67236	2190	2x2	-	-	-	-	-	24.81	24.78
CA_[2A]-13A-46C-[66A]-[66A]	LTE B46	20	50665	5537.5	2x2	LTE B46	20	50467	5517.7	2x2	LTE B66	20	66786	2145	4x4	LTE B66	20	67236	2190	4x4	-	-	-	-	-	24.80	24.78
CA_[2A]-13A-46E	LTE B46	20	50665	5537.5	2x2	LTE B46	20	50467	5517.7	2x2	LTE B46	20	50863	5557.3	2x2	LTE B46	20	51061	5577.1	2x2	-	-	-	-	-	23.87	24.78
CA_13A-46E-[66A]	LTE B46	20	50467	5517.7	2x2	LTE B46	20	50863	5557.3	2x2	LTE B46	20	51061	5577.1	2x2	LTE B66	20	66786	2145	4x4	-	-	-	-	-	24.87	24.78
CA_13A-48E-[66A]	LTE B48	20	56188	3644.8	2x2	LTE B48	20	56386	3664.6	2x2	LTE B48	20	55792	3605.2	2x2	LTE B66	20	66786	2145	4x4	-	-	-	-	-	24.73	24.78
CA_13A-[48E]-66A	LTE B48	20	56188	3644.8	4x4	LTE B48	20	56386	3664.6	4x4	LTE B48	20	55792	3605.2	4x4	LTE B66	20	66786	2145	2x2	-	-	-	-	-	24.69	24.78
CA_2A-13A-46D-[66A]-66A	LTE B46	20	50665	5537.5	2x2	LTE B46	20	50467	5517.7	2x2	LTE B46	20	50863	5557.3	2x2	LTE B66	20	66786	2145	4x4	LTE B66	20	67236	2190	2x2	24.78	24.78
CA_2A-13A-46D-[66A]-[66A]	LTE B46	20	50665	5537.5	2x2	LTE B46	20	50467	5517.7	2x2	LTE B46	20	50863	5557.3	2x2	LTE B66	20	66786	2145	4x4	LTE B66	20	67236	2190	4x4	24.79	24.78
CA_[2A]-13A-46D-66A-66A	LTE B46	20	50665	5537.5	2x2	LTE B46	20	50467	5517.7	2x2	LTE B46	20	50863	5557.3	2x2	LTE B66	20	66786	2145	2x2	LTE B66	20	67236	2190	2x2	24.82	24.78
CA_[2A]-13A-46D-[66A]-66A	LTE B46	20	50665	5537.5	2x2	LTE B46	20	50467	5517.7	2x2	LTE B46	20	50863	5557.3	2x2	LTE B66	20	66786	2145	4x4	LTE B66	20	67236	2190	2x2	24.78	24.78
CA_[2A]-13A-46D-[66A]-[66A]	LTE B46	20	50665	5537.5	2x2	LTE B46	20	50467	5517.7	2x2	LTE B46	20	50863	5557.3	2x2	LTE B66	20	66786	2145	4x4	LTE B66	20	67236	2190	4x4	24.80	24.78

J.3.5 LTE Band 14 as PCC

Table J-17
Maximum Output Powers

	PCC										SCC 1					SCC 2					SCC 3					SCC 4					Power	
Combination	PCC Band	PCC BW [MHz]	PCC (UL) Ch.	PCC (UL) Freq. [MHz]	Mod.	PCC UL# RB	PCC UL RB Offset	PCC (DL) Ch.	PCC (DL) Freq. [MHz]	DL Ant. Config.	SCC Band	SCC BW [MHz]	SCC (DL) Ch.	SCC (DL) Freq. [MHz]	DL Ant. Config.	SCC Band	SCC BW [MHz]	SCC (DL) Ch.	SCC (DL) Freq. [MHz]	DL Ant. Config.	SCC Band	SCC BW [MHz]	SCC (DL) Ch.	SCC (DL) Freq. [MHz]	DL Ant. Config.	SCC Band	SCC BW [MHz]	SCC (DL) Ch.	SCC (DL) Freq. [MHz]	DL Ant. Config.	LTE Tx.Power with DL CA Enabled	LTE Single Carrier Tx Power (dBm)
CA_2A-2A-14A-30A-[66A]	LTE B14	10	23330	793	QPSK	1	49	5330	763	2x2	LTE B2	20	900	1960	2x2	LTE B2	20	700	1940	2x2	LTE B30	10	9820	2355	2x2	LTE B66	20	66786	2145	4x4	25.00	25.08
CA_2A-2A-14A-[30A]-66A	LTE B14	10	23330	793	QPSK	1	49	5330	763	2x2	LTE B2	20	900	1960	2x2	LTE B2	20	700	1940	2x2	LTE B30	10	9820	2355	4x4	LTE B66	20	66786	2145	2x2	25.01	25.08
CA_2A-2A-14A-[30A]-[66A]	LTE B14	10	23330	793	QPSK	1	49	5330	763	2x2	LTE B2	20	900	1960	2x2	LTE B2	20	700	1940	2x2	LTE B30	10	9820	2355	4x4	LTE B66	20	66786	2145	4x4	24.97	25.08
CA_[2A]-2A-14A-30A-66A	LTE B14	10	23330	793	QPSK	1	49	5330	763	2x2	LTE B2	20	900	1960	4x4	LTE B2	20	700	1940	2x2	LTE B30	10	9820	2355	2x2	LTE B66	20	66786	2145	2x2	24.96	25.08
CA_[2A]-2A-14A-30A-[66A]	LTE B14	10	23330	793	QPSK	1	49	5330	763	2x2	LTE B2	20	900	1960	4x4	LTE B2	20	700	1940	2x2	LTE B30	10	9820	2355	2x2	LTE B66	20	66786	2145	4x4	25.00	25.08
CA_[2A]-2A-14A-[30A]-66A	LTE B14	10	23330	793	QPSK	1	49	5330	763	2x2	LTE B2	20	900	1960	4x4	LTE B2	20	700	1940	2x2	LTE B30	10	9820	2355	4x4	LTE B66	20	66786	2145	2x2	24.99	25.08
CA_[2A]-2A-14A-[30A]-[66A]	LTE B14	10	23330	793	QPSK	1	49	5330	763	2x2	LTE B2	20	900	1960	4x4	LTE B2	20	700	1940	2x2	LTE B30	10	9820	2355	4x4	LTE B66	20	66786	2145	4x4	25.01	25.08
CA_[2A]-[2A]-14A-30A-66A	LTE B14	10	23330	793	QPSK	1	49	5330	763	2x2	LTE B2	20	900	1960	4x4	LTE B2	20	700	1940	4x4	LTE B30	10	9820	2355	2x2	LTE B66	20	66786	2145	2x2	25.03	25.08
CA_[2A]-[2A]-14A-30A-[66A]	LTE B14	10	23330	793	QPSK	1	49	5330	763	2x2	LTE B2	20	900	1960	4x4	LTE B2	20	700	1940	4x4	LTE B30	10	9820	2355	2x2	LTE B66	20	66786	2145	4x4	25.02	25.08
CA_[2A]-[2A]-14A-[30A]-66A	LTE B14	10	23330	793	QPSK	1	49	5330	763	2x2	LTE B2	20	900	1960	4x4	LTE B2	20	700	1940	4x4	LTE B30	10	9820	2355	4x4	LTE B66	20	66786	2145	2x2	25.04	25.08
CA_[2A]-[2A]-14A-[30A]-[66A]	LTE B14	10	23330	793	QPSK	1	49	5330	763	2x2	LTE B2	20	900	1960	4x4	LTE B2	20	700	1940	4x4	LTE B30	10	9820	2355	4x4	LTE B66	20	66786	2145	4x4	25.05	25.08
CA_2A-2A-14A-[66A]-66A	LTE B14	10	23330	793	QPSK	1	49	5330	763	2x2	LTE B2	20	900	1960	2x2	LTE B2	20	700	1940	2x2	LTE B66	20	66786	2145	4x4	LTE B66	20	67236	2190	2x2	25.01	25.08
CA_2A-2A-14A-[66A]-[66A]	LTE B14	10	23330	793	QPSK	1	49	5330	763	2x2	LTE B2	20	900	1960	2x2	LTE B2	20	700	1940	2x2	LTE B66	20	66786	2145	4x4	LTE B66	20	67236	2190	4x4	24.98	25.08
CA_[2A]-2A-14A-66A-66A	LTE B14	10	23330	793	QPSK	1	49	5330	763	2x2	LTE B2	20	900	1960	4x4	LTE B2	20	700	1940	2x2	LTE B66	20	66786	2145	2x2	LTE B66	20	67236	2190	2x2	25.00	25.08
CA_[2A]-2A-14A-[66A]-66A	LTE B14	10	23330	793	QPSK	1	49	5330	763	2x2	LTE B2	20	900	1960	4x4	LTE B2	20	700	1940	2x2	LTE B66	20	66786	2145	4x4	LTE B66	20	67236	2190	2x2	25.01	25.08
CA_[2A]-2A-14A-[66A]-[66A]	LTE B14	10	23330	793	QPSK	1	49	5330	763	2x2	LTE B2	20	900	1960	4x4	LTE B2	20	700	1940	2x2	LTE B66	20	66786	2145	4x4	LTE B66	20	67236	2190	4x4	24.97	25.08
CA_[2A]-[2A]-14A-66A-66A	LTE B14	10	23330	793	QPSK	1	49	5330	763	2x2	LTE B2	20	900	1960	4x4	LTE B2	20	700	1940	4x4	LTE B66	20	66786	2145	2x2	LTE B66	20	67236	2190	2x2	25.00	25.08
CA_[2A]-[2A]-14A-[66A]-66A	LTE B14	10	23330	793	QPSK	1	49	5330	763	2x2	LTE B2	20	900	1960	4x4	LTE B2	20	700	1940	4x4	LTE B66	20	66786	2145	4x4	LTE B66	20	67236	2190	2x2	25.02	25.08
CA_[2A]-[2A]-14A-[66A]-[66A]	LTE B14	10	23330	793	QPSK	1	49	5330	763	2x2	LTE B2	20	900	1960	4x4	LTE B2	20	700	1940	4x4	LTE B66	20	66786	2145	4x4	LTE B66	20	67236	2190	4x4	25.01	25.08
CA_2A-14A-30A-[66A]-66A	LTE B14	10	23330	793	QPSK	1	49	5330	763	2x2	LTE B2	20	900	1960	2x2	LTE B30	10	9820	2355	2x2	LTE B66	20	66786	2145	4x4	LTE B66	20	67236	2190	2x2	24.99	25.08
CA_2A-14A-30A-[66A]-[66A]	LTE B14	10	23330	793	QPSK	1	49	5330	763	2x2	LTE B2	20	900	1960	2x2	LTE B30	10	9820	2355	2x2	LTE B66	20	66786	2145	4x4	LTE B66	20	67236	2190	4x4	25.00	25.08
CA_2A-14A-[30A]-66A-66A	LTE B14	10	23330	793	QPSK	1	49	5330	763	2x2	LTE B2	20	900	1960	2x2	LTE B30	10	9820	2355	4x4	LTE B66	20	66786	2145	2x2	LTE B66	20	67236	2190	2x2	25.01	25.08
CA_2A-14A-[30A]-[66A]-66A	LTE B14	10	23330	793	QPSK	1	49	5330	763	2x2	LTE B2	20	900	1960	2x2	LTE B30	10	9820	2355	4x4	LTE B66	20	66786	2145	4x4	LTE B66	20	67236	2190	2x2	25.02	25.08
CA_2A-14A-[30A]-[66A]-[66A]	LTE B14	10	23330	793	QPSK	1	49	5330	763	2x2	LTE B2	20	900	1960	2x2	LTE B30	10	9820	2355	4x4	LTE B66	20	66786	2145	4x4	LTE B66	20	67236	2190	4x4	24.98	25.08
CA_[2A]-14A-30A-66A-66A	LTE B14	10	23330	793	QPSK	1	49	5330	763	2x2	LTE B2	20	900	1960	4x4	LTE B30	10	9820	2355	2x2	LTE B66	20	66786	2145	2x2	LTE B66	20	67236	2190	2x2	25.00	25.08
CA_[2A]-14A-30A-[66A]-66A	LTE B14	10	23330	793	QPSK	1	49	5330	763	2x2	LTE B2	20	900	1960	4x4	LTE B30	10	9820	2355	2x2	LTE B66	20	66786	2145	4x4	LTE B66	20	67236	2190	2x2	24.96	25.08
CA_[2A]-14A-30A-[66A]-[66A]	LTE B14	10	23330	793	QPSK	1	49	5330	763	2x2	LTE B2	20	900	1960	4x4	LTE B30	10	9820	2355	2x2	LTE B66	20	66786	2145	4x4	LTE B66	20	67236	2190	4x4	25.01	25.08
CA_[2A]-14A-[30A]-66A-66A	LTE B14	10	23330	793	QPSK	1	49	5330	763	2x2	LTE B2	20	900	1960	4x4	LTE B30	10	9820	2355	4x4	LTE B66	20	66786	2145	2x2	LTE B66	20	67236	2190	2x2	24.99	25.08
CA_[2A]-14A-[30A]-[66A]-66A	LTE B14	10	23330	793	QPSK	1	49	5330	763	2x2	LTE B2	20	900	1960	4x4	LTE B30	10	9820	2355	4x4	LTE B66	20	66786	2145	4x4	LTE B66	20	67236	2190	2x2	25.01	25.08
CA_[2A]-14A-[30A]-[66A]-[66A]	LTE B14	10	23330	793	QPSK	1	49	5330	763	2x2	LTE B2	20	900	1960	4x4	LTE B30	10	9820	2355	4x4	LTE B66	20	66786	2145	4x4	LTE B66	20	67236	2190	4x4	24.96	25.08

© 2021 PCTEST

J.3.6 LTE Band 5 as PCC

Table J-18
Maximum Output Powers

	PCC										SCC 1					SCC 2					SCC 3					SCC 4					SCC 5					SCC 6					Power	
Combination	PCC Band	PCC BW [MHz]	PCC (UL) Ch.	PCC (UL) Freq. [MHz]	Mod.	PCC UL# RB	PCC UL RB Offset	PCC (DL) Ch.	PCC (DL) Freq. [MHz]	DL Ant. Config.	SCC Band	SCC BW [MHz]	SCC (DL) Ch.	SCC (DL) Freq. [MHz]	DL Ant. Config.	SCC Band	SCC BW [MHz]	SCC (DL) Ch.	SCC (DL) Freq. [MHz]	DL Ant. Config.	SCC Band	SCC BW [MHz]	SCC (DL) Ch.	SCC (DL) Freq. [MHz]	DL Ant. Config.	SCC Band	SCC BW [MHz]	SCC (DL) Ch.	SCC (DL) Freq. [MHz]	DL Ant. Config.	SCC Band	SCC BW [MHz]	SCC (DL) Ch.	SCC (DL) Freq. [MHz]	DL Ant. Config.	SCC Band	SCC BW [MHz]	SCC (DL) Ch.	SCC (DL) Freq. [MHz]	DL Ant. Config.	LTE Tx.Power with DL CA Enabled	LTE Single Carrier Tx Power (dBm)
CA_5A-[25A]	LTE B5	10	20525	836.5	QPSK	1	0	2525	881.5	2x2	LTE B25	20	8365	1962.5	4x4	-	-	-	-	-	-	-	-	-	-	-	-	-	-	-	-	-	-	-	-	-	-	-	-	-	24.99	25.04
CA_2A-2A-[4A]-5A	LTE B5	10	20525	836.5	QPSK	1	0	2525	881.5	2x2	LTE B2	20	900	1960	2x2	LTE B2	20	700	1940	2x2	LTE B4	20	2175	2132.5	4x4	-	-	-	-	-	-	-	-	-	-	-	-	-	-	-	25.01	25.04
CA_[2A]-2A-4A-5A	LTE B5	10	20525	836.5	QPSK	1	0	2525	881.5	2x2	LTE B2	20	900	1960	4x4	LTE B2	20	700	1940	2x2	LTE B4	20	2175	2132.5	2x2	-	-	-	-	-	-	-	-	-	-	-	-	-	-	-	25.03	25.04
CA_[2A]-2A-[4A]-5A	LTE B5	10	20525	836.5	QPSK	1	0	2525	881.5	2x2	LTE B2	20	900	1960	4x4	LTE B2	20	700	1940	2x2	LTE B4	20	2175	2132.5	4x4	-	-	-	-	-	-	-	-	-	-	-	-	-	-	-	25.01	25.04
CA_[2A]-[2A]-4A-5A	LTE B5	10	20525	836.5	QPSK	1	0	2525	881.5	2x2	LTE B2	20	900	1960	4x4	LTE B2	20	700	1940	4x4	LTE B4	20	2175	2132.5	2x2	-	-	-	-	-	-	-	-	-	-	-	-	-	-	-	25.05	25.04
CA_[2A]-[2A]-[4A]-5A	LTE B5	10	20525	836.5	QPSK	1	0	2525	881.5	2x2	LTE B2	20	900	1960	4x4	LTE B2	20	700	1940	4x4	LTE B4	20	2175	2132.5	4x4	-	-	-	-	-	-	-	-	-	-	-	-	-	-	-	24.95	25.04
CA_2A-[4A]-4A-5A	LTE B5	10	20525	836.5	QPSK	1	0	2525	881.5	2x2	LTE B2	20	900	1960	2x2	LTE B4	20	2175	2132.5	4x4	LTE B4	10	2350	2150	2x2	-	-	-	-	-	-	-	-	-	-	-	-	-	-	-	25.10	25.04
CA_2A-[4A]-[4A]-5A	LTE B5	10	20525	836.5	QPSK	1	0	2525	881.5	2x2	LTE B2	20	900	1960	2x2	LTE B4	20	2175	2132.5	4x4	LTE B4	10	2350	2150	4x4	-	-	-	-	-	-	-	-	-	-	-	-	-	-	-	25.05	25.04
CA_[2A]-4A-4A-5A	LTE B5	10	20525	836.5	QPSK	1	0	2525	881.5	2x2	LTE B2	20	900	1960	4x4	LTE B4	20	2175	2132.5	2x2	LTE B4	10	2350	2150	2x2	-	-	-	-	-	-	-	-	-	-	-	-	-	-	-	25.08	25.04
CA_[2A]-[4A]-4A-5A	LTE B5	10	20525	836.5	QPSK	1	0	2525	881.5	2x2	LTE B2	20	900	1960	4x4	LTE B4	20	2175	2132.5	4x4	LTE B4	10	2350	2150	2x2	-	-	-	-	-	-	-	-	-	-	-	-	-	-	-	25.10	25.04
CA_[2A]-[4A]-[4A]-5A	LTE B5	10	20525	836.5	QPSK	1	0	2525	881.5	2x2	LTE B2	20	900	1960	4x4	LTE B4	20	2175	2132.5	4x4	LTE B4	10	2350	2150	4x4	-	-	-	-	-	-	-	-	-	-	-	-	-	-	-	25.09	25.04
CA_2A-[4A]-5B	LTE B5	10	20525	836.5	QPSK	1	0	2525	881.5	2x2	LTE B5	5	2453	874.3	2x2	LTE B2	20	900	1960	2x2	LTE B4	20	2175	2132.5	4x4	-	-	-	-	-	-	-	-	-	-	-	-	-	-	-	25.04	25.04
CA_[2A]-4A-5B	LTE B5	10	20525	836.5	QPSK	1	0	2525	881.5	2x2	LTE B5	5	2453	874.3	2x2	LTE B2	20	900	1960	4x4	LTE B4	20	2175	2132.5	2x2	-	-	-	-	-	-	-	-	-	-	-	-	-	-	-	25.02	25.04
CA_[2A]-[4A]-5B	LTE B5	10	20525	836.5	QPSK	1	0	2525	881.5	2x2	LTE B5	5	2453	874.3	2x2	LTE B2	20	900	1960	4x4	LTE B4	20	2175	2132.5	4x4	-	-	-	-	-	-	-	-	-	-	-	-	-	-	-	25.09	25.04
CA_2A-5A-48A-[66A]	LTE B5	10	20525	836.5	QPSK	1	0	2525	881.5	2x2	LTE B2	20	900	1960	2x2	LTE B48	20	55990	3625	2x2	LTE B66	20	66786	2145	4x4	-	-	-	-	-	-	-	-	-	-	-	-	-	-	-	25.03	25.04
CA_2A-5A-[48A]-66A	LTE B5	10	20525	836.5	QPSK	1	0	2525	881.5	2x2	LTE B2	20	900	1960	2x2	LTE B48	20	55990	3625	4x4	LTE B66	20	66786	2145	2x2	-	-	-	-	-	-	-	-	-	-	-	-	-	-	-	25.08	25.04
CA_2A-5A-[48A]-[66A]	LTE B5	10	20525	836.5	QPSK	1	0	2525	881.5	2x2	LTE B2	20	900	1960	2x2	LTE B48	20	55990	3625	4x4	LTE B66	20	66786	2145	4x4	-	-	-	-	-	-	-	-	-	-	-	-	-	-	-	25.03	25.04
CA_[2A]-5A-48A-66A	LTE B5	10	20525	836.5	QPSK	1	0	2525	881.5	2x2	LTE B2	20	900	1960	4x4	LTE B48	20	55990	3625	2x2	LTE B66	20	66786	2145	2x2	-	-	-	-	-	-	-	-	-	-	-	-	-	-	-	25.05	25.04
CA_[2A]-5A-48A-[66A]	LTE B5	10	20525	836.5	QPSK	1	0	2525	881.5	2x2	LTE B2	20	900	1960	4x4	LTE B48	20	55990	3625	2x2	LTE B66	20	66786	2145	4x4	-	-	-	-	-	-	-	-	-	-	-	-	-	-	-	25.03	25.04
CA_[2A]-5A-[48A]-66A	LTE B5	10	20525	836.5	QPSK	1	0	2525	881.5	2x2	LTE B2	20	900	1960	4x4	LTE B48	20	55990	3625	4x4	LTE B66	20	66786	2145	2x2	-	-	-	-	-	-	-	-	-	-	-	-	-	-	-	25.10	25.04
CA_[2A]-5A-[48A]-[66A]	LTE B5	10	20525	836.5	QPSK	1	0	2525	881.5	2x2	LTE B2	20	900	1960	4x4	LTE B48	20	55990	3625	4x4	LTE B66	20	66786	2145	4x4	-	-	-	-	-	-	-	-	-	-	-	-	-	-	-	25.12	25.04
CA_[4A]-4A-5B	LTE B5	10	20525	836.5	QPSK	1	0	2525	881.5	2x2	LTE B5	5	2453	874.3	2x2	LTE B4	20	2175	2132.5	4x4	LTE B4	10	2350	2150	2x2	-	-	-	-	-	-	-	-	-	-	-	-	-	-	-	25.07	25.04
CA_[4A]-[4A]-5B	LTE B5	10	20525	836.5	QPSK	1	0	2525	881.5	2x2	LTE B5	5	2453	874.3	2x2	LTE B4	20	2175	2132.5	4x4	LTE B4	10	2350	2150	4x4	-	-	-	-	-	-	-	-	-	-	-	-	-	-	-	25.05	25.04
CA_5A-5A-[66A]-66A	LTE B5	10	20525	836.5	QPSK	1	0	2525	881.5	2x2	LTE B5	5	2425	871.5	2x2	LTE B66	20	66786	2145	4x4	LTE B66	20	67236	2190	2x2	-	-	-	-	-	-	-	-	-	-	-	-	-	-	-	25.08	25.04
CA_5A-5A-[66A]-[66A]	LTE B5	10	20525	836.5	QPSK	1	0	2525	881.5	2x2	LTE B5	5	2425	871.5	2x2	LTE B66	20	66786	2145	4x4	LTE B66	20	67236	2190	4x4	-	-	-	-	-	-	-	-	-	-	-	-	-	-	-	25.07	25.04
CA_5A-5A-[66B]	LTE B5	10	20525	836.5	QPSK	1	0	2525	881.5	2x2	LTE B5	5	2425	871.5	2x2	LTE B66	15	66786	2145	4x4	LTE B66	5	66879	2154.3	4x4	-	-	-	-	-	-	-	-	-	-	-	-	-	-	-	25.07	25.04
CA_5A-5A-[66C]	LTE B5	10	20525	836.5	QPSK	1	0	2525	881.5	2x2	LTE B5	5	2425	871.5	2x2	LTE B66	20	66786	2145	4x4	LTE B66	20	66984	2164.8	4x4	-	-	-	-	-	-	-	-	-	-	-	-	-	-	-	25.02	25.04
CA_2A-2A-5A-30A-[66A]	LTE B5	10	20525	836.5	QPSK	1	0	2525	881.5	2x2	LTE B2	20	900	1960	2x2	LTE B2	20	700	1940	2x2	LTE B30	10	9820	2355	2x2	LTE B66	20	66786	2145	4x4	-	-	-	-	-	-	-	-	-	-	25.00	25.04
CA_2A-2A-5A-[30A]-66A	LTE B5	10	20525	836.5	QPSK	1	0	2525	881.5	2x2	LTE B2	20	900	1960	2x2	LTE B2	20	700	1940	2x2	LTE B30	10	9820	2355	4x4	LTE B66	20	66786	2145	2x2	-	-	-	-	-	-	-	-	-	-	25.15	25.04
CA_2A-2A-5A-[30A]-[66A]	LTE B5	10	20525	836.5	QPSK	1	0	2525	881.5	2x2	LTE B2	20	900	1960	2x2	LTE B2	20	700	1940	2x2	LTE B30	10	9820	2355	4x4	LTE B66	20	66786	2145	4x4	-	-	-	-	-	-	-	-	-	-	25.02	25.04
CA_[2A]-2A-5A-30A-66A	LTE B5	10	20525	836.5	QPSK	1	0	2525	881.5	2x2	LTE B2	20	900	1960	4x4	LTE B2	20	700	1940	2x2	LTE B30	10	9820	2355	2x2	LTE B66	20	66786	2145	2x2	-	-	-	-	-	-	-	-	-	-	24.98	25.04
CA_[2A]-2A-5A-30A-[66A]	LTE B5	10	20525	836.5	QPSK	1	0	2525	881.5	2x2	LTE B2	20	900	1960	4x4	LTE B2	20	700	1940	2x2	LTE B30	10	9820	2355	2x2	LTE B66	20	66786	2145	4x4	-	-	-	-	-	-	-	-	-	-	24.99	25.04
CA_[2A]-2A-5A-[30A]-66A	LTE B5	10	20525	836.5	QPSK	1	0	2525	881.5	2x2	LTE B2	20	900	1960	4x4	LTE B2	20	700	1940	2x2	LTE B30	10	9820	2355	4x4	LTE B66	20	66786	2145	2x2	-	-	-	-	-	-	-	-	-	-	25.02	25.04
CA_[2A]-2A-5A-[30A]-[66A]	LTE B5	10	20525	836.5	QPSK	1	0	2525	881.5	2x2	LTE B2	20	900	1960	4x4	LTE B2	20	700	1940	2x2	LTE B30	10	9820	2355	4x4	LTE B66	20	66786	2145	4x4	-	-	-	-	-	-	-	-	-	-	25.02	25.04
CA_[2A]-[2A]-5A-30A-66A	LTE B5	10	20525	836.5	QPSK	1	0	2525	881.5	2x2	LTE B2	20	900	1960	4x4	LTE B2	20	700	1940	4x4	LTE B30	10	9820	2355	2x2	LTE B66	20	66786	2145	2x2	-	-	-	-	-	-	-	-	-	-	25.10	25.04
CA_[2A]-[2A]-5A-30A-[66A]	LTE B5	10	20525	836.5	QPSK	1	0	2525	881.5	2x2	LTE B2	20	900	1960	4x4	LTE B2	20	700	1940	4x4	LTE B30	10	9820	2355	2x2	LTE B66	20	66786	2145	4x4	-	-	-	-	-	-	-	-	-	-	24.97	25.04
CA_[2A]-[2A]-5A-[30A]-66A	LTE B5	10	20525	836.5	QPSK	1	0	2525	881.5	2x2	LTE B2	20	900	1960	4x4	LTE B2	20	700	1940	4x4	LTE B30	10	9820	2355	4x4	LTE B66	20	66786	2145	2x2	-	-	-	-	-	-	-	-	-	-	25.00	25.04
CA_[2A]-[2A]-5A-[30A]-[66A]	LTE B5	10	20525	836.5	QPSK	1	0	2525	881.5	2x2	LTE B2	20	900	1960	4x4	LTE B2	20	700	1940	4x4	LTE B30	10	9820	2355	4x4	LTE B66	20	66786	2145	4x4	-	-	-	-	-	-	-	-	-	-	25.02	25.04
CA_2A-2A-5A-[66A]-66A	LTE B5	10	20525	836.5	QPSK	1	0	2525	881.5	2x2	LTE B2	20	900	1960	2x2	LTE B2	20	700	1940	2x2	LTE B66	20	66786	2145	4x4	LTE B66	20	67236	2190	2x2	-	-	-	-	-	-	-	-	-	-	24.99	25.04
CA_2A-2A-5A-[66A]-[66A]	LTE B5	10	20525	836.5	QPSK	1	0	2525	881.5	2x2	LTE B2	20	900	1960	2x2	LTE B2	20	700	1940	2x2	LTE B66	20	66786	2145	4x4	LTE B66	20	67236	2190	4x4	-	-	-	-	-	-	-	-	-	-	25.01	25.04
CA_[2A]-2A-5A-66A-66A	LTE B5	10	20525	836.5	QPSK	1	0	2525	881.5	2x2	LTE B2	20	900	1960	4x4	LTE B2	20	700	1940	2x2	LTE B66	20	66786	2145	2x2	LTE B66	20	67236	2190	2x2	-	-	-	-	-	-	-	-	-	-	25.02	25.04
CA_[2A]-2A-5A-[66A]-66A	LTE B5	10	20525	836.5	QPSK	1	0	2525	881.5	2x2	LTE B2	20	900	1960	4x4	LTE B2	20	700	1940	2x2	LTE B66	20	66786	2145	4x4	LTE B66	20	67236	2190	2x2	-	-	-	-	-	-	-	-	-	-	25.00	25.04
CA_[2A]-2A-5A-[66A]-[66A]	LTE B5	10	20525	836.5	QPSK	1	0	2525	881.5	2x2	LTE B2	20	900	1960	4x4	LTE B2	20	700	1940	2x2	LTE B66	20	66786	2145	4x4	LTE B66	20	67236	2190	4x4	-	-	-	-	-	-	-	-	-	-	25.03	25.04
CA_[2A]-[2A]-5A-66A-66A	LTE B5	10	20525	836.5	QPSK	1	0	2525	881.5	2x2	LTE B2	20	900	1960	4x4	LTE B2	20	700	1940	4x4	LTE B66	20	66786	2145	2x2	LTE B66	20	67236	2190	2x2	-	-	-	-	-	-	-	-	-	-	25.01	25.04
CA_[2A]-[2A]-5A-[66A]-66A	LTE B5	10	20525	836.5	QPSK	1	0	2525	881.5	2x2	LTE B2	20	900	1960	4x4	LTE B2	20	700	1940	4x4	LTE B66	20	66786	2145	4x4	LTE B66	20	67236	2190	2x2	-	-	-	-	-	-	-	-	-	-	25.04	25.04
CA_[2A]-[2A]-5A-[66A]-[66A]	LTE B5	10	20525	836.5	QPSK	1	0	2525	881.5	2x2	LTE B2	20	900	1960	4x4	LTE B2	20	700	1940	4x4	LTE B66	20	66786	2145	4x4	LTE B66	20	67236	2190	4x4	-	-	-	-	-	-	-	-	-	-	25.00	25.04
CA_2A-2A-5A-[66B]	LTE B5	10	20525	836.5	QPSK	1	0	2525	881.5	2x2	LTE B2	20	900	1960	2x2	LTE B2	20	700	1940	2x2	LTE B66	15	66786	2145	4x4	LTE B66	5	66879	2154.3	4x4	-	-	-	-	-	-	-	-	-	-	25.01	25.04
CA_[2A]-2A-5A-66B	LTE B5	10	20525	836.5	QPSK	1	0	2525	881.5	2x2	LTE B2	20	900	1960	4x4	LTE B2	20	700	1940	2x2	LTE B66	15	66786	2145	2x2	LTE B66	5	66879	2154.3	2x2	-	-	-	-	-	-	-	-	-	-	24.97	25.04
CA_[2A]-2A-5A-[66B]	LTE B5	10	20525	836.5	QPSK	1	0	2525	881.5	2x2	LTE B2	20	900	1960	4x4	LTE B2	20	700	1940	2x2	LTE B66	15	66786	2145	4x4	LTE B66	5	66879	2154.3	4x4	-	-	-	-	-	-	-	-	-	-	25.02	25.04
CA_[2A]-[2A]-5A-66B	LTE B5	10	20525	836.5	QPSK	1	0	2525	881.5	2x2	LTE B2	20	900	1960	4x4	LTE B2	20	700	1940	4x4	LTE B66	15	66786	2145	2x2	LTE B66	5	66879	2154.3	2x2	-	-	-	-	-	-	-	-	-	-	25.03	25.04
CA_[2A]-[2A]-5A-[66B]	LTE B5	10	20525	836.5	QPSK	1	0	2525	881.5	2x2	LTE B2	20	900	1960	4x4	LTE B2	20	700	1940	4x4	LTE B66	15	66786	2145	4x4	LTE B66	5	66879	2154.3	4x4	-	-	-	-	-	-	-	-	-	-	24.98	25.04
CA_2A-2A-5A-[66C]	LTE B5	10	20525	836.5	QPSK	1	0	2525	881.5	2x2	LTE B2	20	900	1960	2x2	LTE B2	20	700	1940	2x2	LTE B66	20	66786	2145	4x4	LTE B66	20	66984	2164.8	4x4	-	-	-	-	-	-	-	-	-	-	25.01	25.04
CA_[2A]-2A-5A-66C	LTE B5	10	20525	836.5	QPSK	1	0	2525	881.5	2x2	LTE B2	20	900	1960	4x4	LTE B2	20	700	1940	2x2	LTE B66	20	66786	2145	2x2	LTE B66	20	66984	2164.8	2x2	-	-	-	-	-	-	-	-	-	-	24.99	25.04
CA_[2A]-2A-5A-[66C]	LTE B5	10	20525	836.5	QPSK	1	0	2525	881.5	2x2	LTE B2	20	900	1960	4x4	LTE B2	20	700	1940	2x2	LTE B66	20	66786	2145	4x4	LTE B66	20	66984	2164.8	4x4	-	-	-	-	-	-	-	-	-	-	24.98	25.04
CA_[2A]-[2A]-5A-66C	LTE B5	10	20525	836.5	QPSK	1	0	2525	881.5	2x2	LTE B2	20	900	1960	4x4	LTE B2	20	700	1940	4x4	LTE B66	20	66786	2145	2x2	LTE B66	20	66984	2164.8	2x2	-	-	-	-	-	-	-	-	-	-	25.02	25.04
CA_[2A]-[2A]-5A-[66C]	LTE B5	10	20525	836.5	QPSK	1	0	2525	881.5	2x2	LTE B2	20	900	1960	4x4	LTE B2	20	700	1940	4x4	LTE B66	20	66786	2145	4x4	LTE B66	20	66984	2164.8	4x4	-	-	-	-	-	-	-	-	-	-	25.04	25.04
CA_2A-2A-5B-[66A]	LTE B5	10	20525	836.5	QPSK	1	0	2525	881.5	2x2	LTE B5	5	2453	874.3	2x2	LTE B2	20	900	1960	2x2	LTE B2	20	700	1940	2x2	LTE B66	20	66786	2145	4x4	-	-	-	-	-	-	-	-	-	-	24.95	25.04
CA_[2A]-2A-5B-66A	LTE B5	10	20525	836.5	QPSK	1	0	2525	881.5	2x2	LTE B5	5	2453	874.3	2x2	LTE B2	20	900	1960	4x4	LTE B2	20	700	1940	2x2	LTE B66	20	66786	2145	2x2	-	-	-	-	-	-	-	-	-	-	25.00	25.04
CA_[2A]-2A-5B-[66A]	LTE B5	10	20525	836.5	QPSK	1	0	2525	881.5	2x2	LTE B5	5	2453	874.3	2x2	LTE B2	20	900	1960	4x4	LTE B2	20	700	1940	2x2	LTE B66	20	66786	2145	4x4	-	-	-	-	-	-	-	-	-	-	25.02	25.04
CA_[2A]-[2A]-5B-66A	LTE B5	10	20525	836.5	QPSK	1	0	2525	881.5	2x2	LTE B5	5	2453	874.3	2x2	LTE B2	20	900	1960	4x4	LTE B2	20	700	1940	4x4	LTE B66	20	66786	2145	2x2	-	-	-	-	-	-	-	-	-	-	24.98	25.04
CA_[2A]-[2A]-5B-[66A]	LTE B5	10	20525	836.5	QPSK	1	0	2525	881.5	2x2	LTE B5	5	2453	874.3	2x2	LTE B2	20	900	1960	4x4	LTE B2	20	700	1940	4x4	LTE B66	20	66786	2145	4x4	-	-	-	-	-	-	-	-	-	-	25.02	25.04
CA_2A-5A-30A-[66A]-66A	LTE B5	10	20525	836.5	QPSK	1	0	2525	881.5	2x2	LTE B2	20	900	1960	2x2	LTE B30	10	9820	2355	2x2	LTE B66	20	66786	2145	4x4	LTE B66	20	67236	2190	2x2	-	-	-	-	-	-	-	-	-	-	25.07	25.04
CA_2A-5A-30A-[66A]-[66A]	LTE B5	10	20525	836.5	QPSK	1	0	2525	881.5	2x2	LTE B2	20	900	1960	2x2	LTE B30	10	9820	2355	2x2	LTE B66	20	66786	2145	4x4	LTE B66	20	67236	2190	4x4	-	-	-	-	-	-	-	-	-	-	25.01	25.04
CA_2A-5A-[30A]-66A-66A	LTE B5	10	20525	836.5	QPSK	1	0	2525	881.5	2x2	LTE B2	20	900	1960	2x2	LTE B30	10	9820	2355	4x4	LTE B66	20	66786	2145	2x2	LTE B66	20	67236	2190	2x2	-	-	-	-	-	-	-	-	-	-	25.03	25.04
CA_2A-5A-[30A]-[66A]-66A	LTE B5	10	20525	836.5	QPSK	1	0	2525	881.5	2x2	LTE B2	20	900	1960	2x2	LTE B30	10	9820	2355	4x4	LTE B66	20	66786	2145	4x4	LTE B66	20	67236	2190	2x2	-	-	-	-	-	-	-	-	-	-	25.04	25.04
CA_2A-5A-[30A]-[66A]-[66A]	LTE B5	10	20525	836.5	QPSK	1	0	2525	881.5	2x2	LTE B2	20	900	1960	2x2	LTE B30	10	9820	2355	4x4	LTE B66	20	66786	2145	4x4	LTE B66	20	67236	2190	4x4	-	-	-	-	-	-	-	-	-	-	25.09	25.04
CA_[2A]-5A-30A-66A-66A	LTE B5	10	20525	836.5	QPSK	1	0	2525	881.5	2x2	LTE B2	20	900	1960	4x4	LTE B30	10	9820	2355	2x2	LTE B66	20	66786	2145	2x2	LTE B66	20	67236	2190	2x2	-	-	-	-	-	-	-	-	-	-	25.05	25.04
CA_[2A]-5A-30A-[66A]-66A	LTE B5	10	20525	836.5	QPSK	1	0	2525	881.5	2x2	LTE B2	20	900	1960	4x4	LTE B30	10	9820	2355	2x2	LTE B66	20	66786	2145	4x4	LTE B66	20	67236	2190	2x2	-	-	-	-	-	-	-	-	-	-	25.01	25.04
CA_[2A]-5A-30A-[66A]-[66A]	LTE B5	10	20525	836.5	QPSK	1	0	2525	881.5	2x2	LTE B2	20	900	1960	4x4	LTE B30	10	9820	2355	2x2	LTE B66	20	66786	2145	4x4	LTE B66	20	67236	2190	4x4	-	-	-	-	-	-	-	-	-	-	25.04	25.04
CA_[2A]-5A-[30A]-66A-66A	LTE B5	10	20525	836.5	QPSK	1	0	2525	881.5	2x2	LTE B2	20	900	1960	4x4	LTE B30	10	9820	2355	4x4	LTE B66	20	66786	2145	2x2	LTE B66	20	67236	2190	2x2	-	-	-	-	-	-	-	-	-	-	25.07	25.04
CA_[2A]-5A-[30A]-[66A]-66A	LTE B5	10	20525	836.5	QPSK	1	0	2525	881.5	2x2	LTE B2	20	900	1960	4x4	LTE B30	10	9820	2355	4x4	LTE B66	20	66786	2145	4x4	LTE B66	20	67236	2190	2x2	-	-	-	-	-	-	-	-	-	-	25.00	25.04
CA_[2A]-5A-[30A]-[66A]-[66A]	LTE B5	10	20525	836.5	QPSK	1	0	2525	881.5	2x2	LTE B2	20	900	1960	4x4	LTE B30	10	9820	2355	4x4	LTE B66	20	66786	2145	4x4	LTE B66	20	67236	2190	4x4	-	-	-	-	-	-	-	-	-	-	25.02	25.04
CA_2A-5B-30A-[66A]	LTE B5	10	20525	836.5	QPSK	1	0	2525	881.5	2x2	LTE B5	5	2453	874.3	2x2	LTE B2	20	900	1960	2x2	LTE B30	10	9820	2355	2x2	LTE B66	20	66786	2145	4x4	-	-	-	-	-	-	-	-	-	-	25.07	25.04
CA_2A-5B-[30A]-66A	LTE B5	10	20525	836.5	QPSK	1	0	2525	881.5	2x2	LTE B5	5	2453	874.3	2x2	LTE B2	20	900	1960	2x2	LTE B30	10	9820	2355	4x4	LTE B66	20	66786	2145	2x2	-	-	-	-	-	-	-	-	-	-	25.02	25.04
CA_2A-5B-[30A]-[66A]	LTE B5	10	20525	836.5	QPSK	1	0	2525	881.5	2x2	LTE B5	5	2453	874.3	2x2	LTE B2	20	900	1960	2x2	LTE B30	10	9820	2355	4x4	LTE B66	20	66786	2145	4x4	-	-	-	-	-	-	-	-	-	-	25.01	25.04
CA_[2A]-5B-30A-66A	LTE B5	10	20525	836.5	QPSK	1	0	2525	881.5	2x2	LTE B5	5	2453	874.3	2x2	LTE B2	20	900	1960	4x4	LTE B30	10	9820	2355	2x2	LTE B66	20	66786	2145	2x2	-	-	-	-	-	-	-	-	-	-	25.13	25.04
CA_[2A]-5B-30A-[66A]	LTE B5	10	20525	836.5	QPSK	1	0	2525	881.5	2x2	LTE B5	5	2453	874.3	2x2	LTE B2	20	900	1960	4x4	LTE B30	10	9820	2355	2x2	LTE B66	20	66786	2145	4x4	-	-	-	-	-	-	-	-	-	-	25.03	25.04
CA_[2A]-5B-[30A]-66A	LTE B5	10	20525	836.5	QPSK	1	0	2525	881.5	2x2	LTE B5	5	2453	874.3	2x2	LTE B2	20	900	1960	4x4	LTE B30	10	9820	2355	4x4	LTE B66	20	66786	2145	2x2	-	-	-	-	-	-	-	-	-	-	25.01	25.04
CA_[2A]-5B-[30A]-[66A]	LTE B5	10	20525	836.5	QPSK	1	0	2525	881.5	2x2	LTE B5	5	2453	874.3	2x2	LTE B2	20	900	1960	4x4	LTE B30	10	9820	2355	4x4	LTE B66	20	66786	2145	4x4	-	-	-	-	-	-	-	-	-	-	24.99	25.04
CA_2A-5A-46A-[66A]-66A	LTE B5	10	20525	836.5	QPSK	1	0	2525	881.5	2x2	LTE B2	20	900	1960	2x2	LTE B46	20	50665	5537.5	2x2	LTE B66	20	66786	2145	4x4	LTE B66	20	67236	2190	2x2	-	-	-	-	-	-	-	-	-	-	25.10	25.04
CA_2A-5A-46A-[66A]-[66A]	LTE B5	10	20525	836.5	QPSK	1	0	2525	881.5	2x2	LTE B2	20	900	1960	2x2	LTE B46	20	50665	5537.5	2x2	LTE B66	20	66786	2145	4x4	LTE B66	20	67236	2190	4x4	-	-	-	-	-	-	-	-	-	-	25.07	25.04
CA_[2A]-5A-46A-66A-66A	LTE B5	10	20525	836.5	QPSK	1	0	2525	881.5	2x2	LTE B2	20	900	1960	4x4	LTE B46	20	50665	5537.5	2x2	LTE B66	20	66786	2145	2x2	LTE B66	20	67236	2190	2x2	-	-	-	-	-	-	-	-	-	-	24.08	25.04
CA_[2A]-5A-46A-[66A]-66A	LTE B5	10	20525	836.5	QPSK	1	0	2525	881.5	2x2	LTE B2	20	900	1960	4x4	LTE B46	20	50665	5537.5	2x2	LTE B66	20	66786	2145	4x4	LTE B66	20	67236	2190	2x2	-	-	-	-	-	-	-	-	-	-	25.10	25.04
CA_[2A]-5A-46A-[66A]-[66A]	LTE B5	10	20525	836.5	QPSK	1	0	2525	881.5	2x2	LTE B2	20	900	1960	4x4	LTE B46	20	50665	5537.5	2x2	LTE B66	20	66786	2145	4x4	LTE B66	20	67236	2190	4x4	-	-	-	-	-	-	-	-	-	-	25.10	25.04
CA_2A-5A-48A-[66A]-66A	LTE B5	10	20525	836.5	QPSK	1	0	2525	881.5	2x2	LTE B2	20	900	1960	2x2	LTE B48	20	55990	3625	2x2	LTE B66	20	66786	2145	4x4	LTE B66	20	67236	2190	2x2	-	-	-	-	-	-	-	-	-	-	24.98	25.04
CA_2A-5A-48A-[66A]-[66A]	LTE B5	10	20525	836.5	QPSK	1	0	2525	881.5	2x2	LTE B2	20	900	1960	2x2	LTE B48	20	55990	3625	2x2	LTE B66	20	66786	2145	4x4	LTE B66	20	67236	2190	4x4	-	-	-	-	-	-	-	-	-	-	25.02	25.04
CA_2A-5A-[48A]-66A-66A	LTE B5	10	20525	836.5	QPSK	1	0	2525	881.5	2x2	LTE B2	20	900	1960	2x2	LTE B48	20	55990	3625	4x4	LTE B66	20	66786	2145	2x2	LTE B66	20	67236	2190	2x2	-	-	-	-	-	-	-	-	-	-	25.00	25.04
CA_2A-5A-[48A]-[66A]-66A	LTE B5	10	20525	836.5	QPSK	1	0	2525	881.5	2x2	LTE B2	20	900	1960	2x2	LTE B48	20	55990	3625	4x4	LTE B66	20	66786	2145	4x4	LTE B66	20	67236	2190	2x2	-	-	-	-	-	-	-	-	-	-	25.08	25.04
CA_2A-5A-[48A]-[66A]-[66A]	LTE B5	10	20525	836.5	QPSK	1	0	2525	881.5	2x2	LTE B2	20	900	1960	2x2	LTE B48	20	55990	3625	4x4	LTE B66	20	66786	2145	4x4	LTE B66	20	67236	2190	4x4	-	-	-	-	-	-	-	-	-	-	25.02	25.04
CA_[2A]-5A-48A-66A-66A	LTE B5	10	20525	836.5	QPSK	1	0	2525	881.5	2x2	LTE B2	20	900	1960	4x4	LTE B48	20	55990	3625	2x2	LTE B66	20	66786	2145	2x2	LTE B66	20	67236	2190	2x2	-	-	-	-	-	-	-	-	-	-	24.99	25.04
CA_[2A]-5A-48A-[66A]-66A	LTE B5	10	20525	836.5	QPSK	1	0	2525	881.5	2x2	LTE B2	20	900	1960	4x4	LTE B48	20	55990	3625	2x2	LTE B66	20	66786	2145	4x4	LTE B66	20	67236	2190	2x2	-	-	-	-	-	-	-	-	-	-	25.03	25.04
CA_[2A]-5A-48A-[66A]-[66A]	LTE B5	10	20525	836.5	QPSK	1	0	2525	881.5	2x2	LTE B2	20	900	1960	4x4	LTE B48	20	55990	3625	2x2	LTE B66	20	66786	2145	4x4	LTE B66	20	67236	2190	4x4	-	-	-	-	-	-	-	-	-	-	25.11	25.04
CA_[2A]-5A-[48A]-66A-66A	LTE B5	10	20525	836.5	QPSK	1	0	2525	881.5	2x2	LTE B2	20	900	1960	4x4	LTE B48	20	55990	3625	4x4	LTE B66	20	66786	2145	2x2	LTE B66	20	67236	2190	2x2	-	-	-	-	-	-	-	-	-	-	25.08	25.04
CA_[2A]-5A-[48A]-[66A]-66A	LTE B5	10	20525	836.5	QPSK	1	0	2525	881.5	2x2	LTE B2	20	900	1960	4x4	LTE B48	20	55990	3625	4x4	LTE B66	20	66786	2145	4x4	LTE B66	20	67236	2190	2x2	-	-	-	-	-	-	-	-	-	-	25.00	25.04
CA_[2A]-5A-[48A]-[66A]-[66A]	LTE B5	10	20525	836.5	QPSK	1	0	2525	881.5	2x2	LTE B2	20	900	1960	4x4	LTE B48	20	55990	3625	4x4	LTE B66	20	66786	2145	4x4	LTE B66	20	67236	2190	4x4	-	-	-	-	-	-	-	-	-	-	25.02	25.04
CA_2A-5A-48C-[66A]	LTE B5	10	20525	836.5	QPSK	1	0	2525	881.5	2x2	LTE B2	20	900	1960	2x2	LTE B48	20	55990	3625	2x2	LTE B48	20	56188	3644.8	2x2	LTE B66	20	66786	2145	4x4	-	-	-	-	-	-	-	-	-	-	25.08	25.04
CA_2A-5A-[48C]-66A	LTE B5	10	20525	836.5	QPSK	1	0	2525	881.5	2x2	LTE B2	20	900	1960	2x2	LTE B48	20	55990	3625	4x4	LTE B48	20	56188	3644.8	4x4	LTE B66	20	66786	2145	2x2	-	-	-	-	-	-	-	-	-	-	24.98	25.04
CA_2A-5A-[48C]-[66A]	LTE B5	10	20525	836.5	QPSK	1	0	2525	881.5	2x2	LTE B2	20	900	1960	2x2	LTE B48	20	55990	3625	4x4	LTE B48	20	56188	3644.8	4x4	LTE B66	20	66786	2145	4x4	-	-	-	-	-	-	-	-	-	-	25.02	25.04
CA_[2A]-5A-48C-66A	LTE B5	10	20525	836.5	QPSK	1	0	2525	881.5	2x2	LTE B2	20	900	1960	4x4	LTE B48	20	55990	3625	2x2	LTE B48	20	56188	3644.8	2x2	LTE B66	20	66786	2145	2x2	-	-	-	-	-	-	-	-	-	-	25.09	25.04
CA_[2A]-5A-48C-[66A]	LTE B5	10	20525	836.5	QPSK	1	0	2525	881.5	2x2	LTE B2	20	900	1960	4x4	LTE B48	20	55990	3625	2x2	LTE B48	20	56188	3644.8	2x2	LTE B66	20	66786	2145	4x4	-	-	-	-	-	-	-	-	-	-	25.07	25.04
CA_[2A]-5A-[48C]-66A	LTE B5	10	20525	836.5	QPSK	1	0	2525	881.5	2x2	LTE B2	20	900	1960	4x4	LTE B48	20	55990	3625	4x4	LTE B48	20	56188	3644.8	4x4	LTE B66	20	66786	2145	2x2	-	-	-	-	-	-	-	-	-	-	25.03	25.04
CA_[2A]-5A-[48C]-[66A]	LTE B5	10	20525	836.5	QPSK	1	0	2525	881.5	2x2	LTE B2	20	900	1960	4x4	LTE B48	20	55990	3625	4x4	LTE B48	20	56188	3644.8	4x4	LTE B66	20	66786	2145	4x4	-	-	-	-	-	-	-	-	-	-	24.99	25.04
CA_2A-5A-[48D]	LTE B5	10	20525	836.5	QPSK	1	0	2525	881.5	2x2	LTE B2	20	900	1960	2x2	LTE B48	20	55990	3625	4x4	LTE B48	20	56188	3644.8	4x4	LTE B48	20	56386	3664.6	4x4	-	-	-	-	-	-	-	-	-	-	24.97	25.04
CA_[2A]-5A-48D	LTE B5	10	20525	836.5	QPSK	1	0	2525	881.5	2x2	LTE B2	20	900	1960	4x4	LTE B48	20	55990	3625	2x2	LTE B48	20	56188	3644.8	2x2	LTE B48	20	56386	3664.6	2x2	-	-	-	-	-	-	-	-	-	-	24.95	25.04
CA_[2A]-5A-[48D]	LTE B5	10	20525	836.5	QPSK	1	0	2525	881.5	2x2	LTE B2	20	900	1960	4x4	LTE B48	20	55990	3625	4x4	LTE B48	20	56188	3644.8	4x4	LTE B48	20	56386	3664.6	4x4	-	-	-	-	-	-	-	-	-	-	25.03	25.04
CA_2A-5B-[66A]-66A	LTE B5	10	20525	836.5	QPSK	1	0	2525	881.5	2x2	LTE B5	5	2453	874.3	2x2	LTE B2	20	900	1960	2x2	LTE B66	20	66786	2145	4x4	LTE B66	20	67236	2190	2x2	-	-	-	-	-	-	-	-	-	-	25.04	25.04
CA_2A-5B-[66A]-[66A]	LTE B5	10	20525	836.5	QPSK	1	0	2525	881.5	2x2	LTE B5	5	2453	874.3	2x2	LTE B2	20	900	1960	2x2	LTE B66	20	66786	2145	4x4	LTE B66	20	67236	2190	4x4	-	-	-	-	-	-	-	-	-	-	25.02	25.04
CA_[2A]-5B-66A-66A	LTE B5	10	20525	836.5	QPSK	1	0	2525	881.5	2x2	LTE B5	5	2453	874.3	2x2	LTE B2	20	900	1960	4x4	LTE B66	20	66786	2145	2x2	LTE B66	20	67236	2190	2x2	-	-	-	-	-	-	-	-	-	-	25.03	25.04
CA_[2A]-5B-[66A]-66A	LTE B5	10	20525	836.5	QPSK	1	0	2525	881.5	2x2	LTE B5	5	2453	874.3	2x2	LTE B2	20	900	1960	4x4	LTE B66	20	66786	2145	4x4	LTE B66	20	67236	2190	2x2	-	-	-	-	-	-	-	-	-	-	25.01	25.04
CA_[2A]-5B-[66A]-[66A]	LTE B5	10	20525	836.5	QPSK	1	0	2525	881.5	2x2	LTE B5	5	2453	874.3	2x2	LTE B2	20	900	1960	4x4	LTE B66	20	66786	2145	4x4	LTE B66	20	67236	2190	4x4	-	-	-	-	-	-	-	-	-	-	25.08	25.04
CA_2A-5B-[66B]	LTE B5	10	20525	836.5	QPSK	1	0	2525	881.5	2x2	LTE B5	5	2453	874.3	2x2	LTE B2	20	900	1960	2x2	LTE B66	15	66786	2145	4x4	LTE B66	5	66879	2154.3	4x4	-	-	-	-	-	-	-	-	-	-	25.02	25.04
CA_[2A]-5B-66B	LTE B5	10	20525	836.5	QPSK	1	0	2525	881.5	2x2	LTE B5	5	2453	874.3	2x2	LTE B2	20	900	1960	4x4	LTE B66	15	66786	2145	2x2	LTE B66	5	66879	2154.3	2x2	-	-	-	-	-	-	-	-	-	-	25.04	25.04
CA_[2A]-5B-[66B]	LTE B5	10	20525	836.5	QPSK	1	0	2525	881.5	2x2	LTE B5	5	2453	874.3	2x2	LTE B2	20	900	1960	4x4	LTE B66	15	66786	2145	4x4	LTE B66	5	66879	2154.3	4x4	-	-	-	-	-	-	-	-	-	-	25.07	25.04
CA_2A-5B-[66C]	LTE B5	10	20525	836.5	QPSK	1	0	2525	881.5	2x2	LTE B5	5	2453	874.3	2x2	LTE B2	20	900	1960	2x2	LTE B66	20	66786	2145	4x4	LTE B66	20	66984	2164.8	4x4	-	-	-	-	-	-	-	-	-	-	25.01	25.04
CA_[2A]-5B-66C	LTE B5	10	20525	836.5	QPSK	1	0	2525	881.5	2x2	LTE B5	5	2453	874.3	2x2	LTE B2	20	900	1960	4x4	LTE B66	20	66786	2145	2x2	LTE B66	20	66984	2164.8	2x2	-	-	-	-	-	-	-	-	-	-	24.98	25.04
CA_[2A]-5B-[66C]	LTE B5	10	20525	836.5	QPSK	1	0	2525	881.5	2x2	LTE B5	5	2453	874.3	2x2	LTE B2	20	900	1960	4x4	LTE B66	20	66786	2145	4x4	LTE B66	20	66984	2164.8	4x4	-	-	-	-	-	-	-	-	-	-	25.04	25.04
CA_5B-30A-[66A]-66A	LTE B5	10	20525	836.5	QPSK	1	0	2525	881.5	2x2	LTE B5	5	2453	874.3	2x2	LTE B30	10	9820	2355	2x2	LTE B66	20	66786	2145	4x4	LTE B66	20	67236	2190	2x2	-	-	-	-	-	-	-	-	-	-	25.02	25.04
CA_5B-30A-[66A]-[66A]	LTE B5	10	20525	836.5	QPSK	1	0	2525	881.5	2x2	LTE B5	5	2453	874.3	2x2	LTE B30	10	9820	2355	2x2	LTE B66	20	66786	2145	4x4	LTE B66	20	67236	2190	4x4	-	-	-	-	-	-	-	-	-	-	25.08	25.04
CA_5B-[30A]-66A-66A	LTE B5	10	20525	836.5	QPSK	1	0	2525	881.5	2x2	LTE B5	5	2453	874.3	2x2	LTE B30	10	9820	2355	4x4	LTE B66	20	66786	2145	2x2	LTE B66	20	67236	2190	2x2	-	-	-	-	-	-	-	-	-	-	25.01	25.04
CA_5B-[30A]-[66A]-66A	LTE B5	10	20525	836.5	QPSK	1	0	2525	881.5	2x2	LTE B5	5	2453	874.3	2x2	LTE B30	10	9820	2355	4x4	LTE B66	20	66786	2145	4x4	LTE B66	20	67236	2190	2x2	-	-	-	-	-	-	-	-	-	-	25.03	25.04
CA_5B-[30A]-[66A]-[66A]	LTE B5	10	20525	836.5	QPSK	1	0	2525	881.5	2x2	LTE B5	5	2453	874.3	2x2	LTE B30	10	9820	2355	4x4	LTE B66	20	66786	2145	4x4	LTE B66	20	67236	2190	4x4	-	-	-	-	-	-	-	-	-	-	25.03	25.04
CA_5A-48D-[66A]	LTE B5	10	20525	836.5	QPSK	1	0	2525	881.5	2x2	LTE B48	20	55990	3625	2x2	LTE B48	20	56188	3644.8	2x2	LTE B48	20	56386	3664.6	2x2	LTE B66	20	66786	2145	4x4	-	-	-	-	-	-	-	-	-	-	25.00	25.04
CA_5A-[48D]-66A	LTE B5	10	20525	836.5	QPSK	1	0	2525	881.5	2x2	LTE B48	20	55990	3625	4x4	LTE B48	20	56188	3644.8	4x4	LTE B48	20	56386	3664.6	4x4	LTE B66	20	66786	2145	2x2	-	-	-	-	-	-	-	-	-	-	24.97	25.04
CA_5A-[48D]-[66A]	LTE B5	10	20525	836.5	QPSK	1	0	2525	881.5	2x2	LTE B48	20	55990	3625	4x4	LTE B48	20	56188	3644.8	4x4	LTE B48	20	56386	3664.6	4x4	LTE B66	20	66786	2145	4x4	-	-	-	-	-	-	-	-	-	-	24.96	25.04
CA_2A-5A-46C-[66A]-66A	LTE B5	10	20525	836.5	QPSK	1	0	2525	881.5	2x2	LTE B2	20	900	1960	2x2	LTE B46	20	50665	5537.5	2x2	LTE B46	20	50467	5517.7	2x2	LTE B66	20	66786	2145	4x4	LTE B66	20	67236	2190	2x2	-	-	-	-	-	25.08	25.04
CA_2A-5A-46C-[66A]-[66A]	LTE B5	10	20525	836.5	QPSK	1	0	2525	881.5	2x2	LTE B2	20	900	1960	2x2	LTE B46	20	50665	5537.5	2x2	LTE B46	20	50467	5517.7	2x2	LTE B66	20	66786	2145	4x4	LTE B66	20	67236	2190	4x4	-	-	-	-	-	25.04	25.04
CA_[2A]-5A-46C-66A-66A	LTE B5	10	20525	836.5	QPSK	1	0	2525	881.5	2x2	LTE B2	20	900	1960	4x4	LTE B46	20	50665	5537.5	2x2	LTE B46	20	50467	5517.7	2x2	LTE B66	20	66786	2145	2x2	LTE B66	20	67236	2190	2x2	-	-	-	-	-	25.06	25.04
CA_[2A]-5A-46C-[66A]-66A	LTE B5	10	20525	836.5	QPSK	1	0	2525	881.5	2x2	LTE B2	20	900	1960	4x4	LTE B46	20	50665	5537.5	2x2	LTE B46	20	50467	5517.7	2x2	LTE B66	20	66786	2145	4x4	LTE B66	20	67236	2190	2x2	-	-	-	-	-	25.02	25.04
CA_[2A]-5A-46C-[66A]-[66A]	LTE B5	10	20525	836.5	QPSK	1	0	2525	881.5	2x2	LTE B2	20	900	1960	4x4	LTE B46	20	50665	5537.5	2x2	LTE B46	20	50467	5517.7	2x2	LTE B66	20	66786	2145	4x4	LTE B66	20	67236	2190	4x4	-	-	-	-	-	25.05	25.04
CA_2A-5A-48C-[66A]-66A	LTE B5	10	20525	836.5	QPSK	1	0	2525	881.5	2x2	LTE B2	20	900	1960	2x2	LTE B48	20	55990	3625	2x2	LTE B48	20	56188	3644.8	2x2	LTE B66	20	66786	2145	4x4	LTE B66	20	67236	2190	2x2	-	-	-	-	-	25.03	25.04
CA_2A-5A-48C-[66A]-[66A]	LTE B5	10	20525	836.5	QPSK	1	0	2525	881.5	2x2	LTE B2	20	900	1960	2x2	LTE B48	20	55990	3625	2x2	LTE B48	20	56188	3644.8	2x2	LTE B66	20	66786	2145	4x4	LTE B66	20	67236	2190	4x4	-	-	-	-	-	25.01	25.04
CA_2A-5A-[48C]-66A-66A	LTE B5	10	20525	836.5	QPSK	1	0	2525	881.5	2x2	LTE B2	20	900	1960	2x2	LTE B48	20	55990	3625	4x4	LTE B48	20	56188	3644.8	4x4	LTE B66	20	66786	2145	2x2	LTE B66	20	67236	2190	2x2	-	-	-	-	-	25.00	25.04
CA_[2A]-5A-48C-66A-66A	LTE B5	10	20525	836.5	QPSK	1	0	2525	881.5	2x2	LTE B2	20	900	1960	4x4	LTE B48	20	55990	3625	2x2	LTE B48	20	56188	3644.8	2x2	LTE B66	20	66786	2145	2x2	LTE B66	20	67236	2190	2x2	-	-	-	-	-	25.07	25.04
CA_[2A]-5A-48C-[66A]-66A	LTE B5	10	20525	836.5	QPSK	1	0	2525	881.5	2x2	LTE B2	20	900	1960	4x4	LTE B48	20	55990	3625	2x2	LTE B48	20	56188	3644.8	2x2	LTE B66	20	66786	2145	4x4	LTE B66	20	67236	2190	2x2	-	-	-	-	-	25.08	25.04
CA_[2A]-5A-48C-[66A]-[66A]	LTE B5	10	20525	836.5	QPSK	1	0	2525	881.5	2x2	LTE B2	20	900	1960	4x4	LTE B48	20	55990	3625	2x2	LTE B48	20	56188	3644.8	2x2	LTE B66	20	66786	2145	4x4	LTE B66	20	67236	2190	4x4	-	-	-	-	-	25.06	25.04
CA_2A-5A-46D-[66A]-66A	LTE B5	10	20525	836.5	QPSK	1	0	2525	881.5	2x2	LTE B2	20	900	1960	2x2	LTE B46	20	50665	5537.5	2x2	LTE B46	20	50467	5517.7	2x2	LTE B46	20	50863	5557.3	2x2	LTE B66	20	66786	2145	4x4	LTE B66	20	67236	2190	2x2	25.10	25.04
CA_2A-5A-46D-[66A]-[66A]	LTE B5	10	20525	836.5	QPSK	1	0	2525	881.5	2x2	LTE B2	20	900	1960	2x2	LTE B46	20	50665	5537.5	2x2	LTE B46	20	50467	5517.7	2x2	LTE B46	20	50863	5557.3	2x2	LTE B66	20	66786	2145	4x4	LTE B66	20	67236	2190	4x4	25.02	25.04
CA_[2A]-5A-46D-66A-66A	LTE B5	10	20525	836.5	QPSK	1	0	2525	881.5	2x2	LTE B2	20	900	1960	4x4	LTE B46	20	50665	5537.5	2x2	LTE B46	20	50467	5517.7	2x2	LTE B46	20	50863	5557.3	2x2	LTE B66	20	66786	2145	2x2	LTE B66	20	67236	2190	2x2	25.04	25.04
CA_[2A]-5A-46D-[66A]-66A	LTE B5	10	20525	836.5	QPSK	1	0	2525	881.5	2x2	LTE B2	20	900	1960	4x4	LTE B46	20	50665	5537.5	2x2	LTE B46	20	50467	5517.7	2x2	LTE B46	20	50863	5557.3	2x2	LTE B66	20	66786	2145	4x4	LTE B66	20	67236	2190	2x2	25.10	25.04
CA_[2A]-5A-46D-[66A]-[66A]	LTE B5	10	20525	836.5	QPSK	1	0	2525	881.5	2x2	LTE B2	20	900	1960	4x4	LTE B46	20	50665	5537.5	2x2	LTE B46	20	50467	5517.7	2x2	LTE B46	20	50863	5557.3	2x2	LTE B66	20	66786	2145	4x4	LTE B66	20	67236	2190	4x4	25.03	25.04
CA_2A-5A-46E-[66A]	LTE B5	10	20525	836.5	QPSK	1	0	2525	881.5	2x2	LTE B2	20	900	1960	2x2	LTE B46	20	50665	5537.5	2x2	LTE B46	20	50467	5517.7	2x2	LTE B46	20	50863	5557.3	2x2	LTE B46	20	51061	5577.1	2x2	LTE B66	20	66786	2145	4x4	25.09	25.04
CA_[2A]-5A-46E-66A	LTE B5	10	20525	836.5	QPSK	1	0	2525	881.5	2x2	LTE B2	20	900	1960	4x4	LTE B46	20	50665	5537.5	2x2	LTE B46	20	50467	5517.7	2x2	LTE B46	20	50863	5557.3	2x2	LTE B46	20	51061	5577.1	2x2	LTE B66	20	66786	2145	2x2	25.11	25.04
CA_[2A]-5A-46E-[66A]	LTE B5	10	20525	836.5	QPSK	1	0	2525	881.5	2x2	LTE B2	20	900	1960	4x4	LTE B46	20	50665	5537.5	2x2	LTE B46	20	50467	5517.7	2x2	LTE B46	20	50863	5557.3	2x2	LTE B46	20	51061	5577.1	2x2	LTE B66	20	66786	2145	4x4	25.06	25.04
CA_5A-46E-[66A]-66A	LTE B5	10	20525	836.5	QPSK	1	0	2525	881.5	2x2	LTE B46	20	50665	5537.5	2x2	LTE B46	20	50467	5517.7	2x2	LTE B46	20	50863	5557.3	2x2	LTE B46	20	51061	5577.1	2x2	LTE B66	20	66786	2145	4x4	LTE B66	20	67236	2190	2x2	25.10	25.04
CA_5A-46E-[66A]-[66A]	LTE B5	10	20525	836.5	QPSK	1	0	2525	881.5	2x2	LTE B46	20	50665	5537.5	2x2	LTE B46	20	50467	5517.7	2x2	LTE B46	20	50863	5557.3	2x2	LTE B46	20	51061	5577.1	2x2	LTE B66	20	66786	2145	4x4	LTE B66	20	67236	2190	4x4	25.05	25.04

© 2021 PCTEST

J.3.7 LTE Band 66 as PCC

Table J-19
Maximum Output Powers

	PCC										SCC 1					SCC 2					SCC 3					Power	
Combination	PCC Band	PCC BW [MHz]	PCC (UL) Ch.	PCC (UL) Freq. [MHz]	Mod.	PCC UL# RB	PCC UL RB Offset	PCC (DL) Ch.	PCC (DL) Freq. [MHz]	DL Ant. Config.	SCC Band	SCC BW [MHz]	SCC (DL) Ch.	SCC (DL) Freq. [MHz]	DL Ant. Config.	SCC Band	SCC BW [MHz]	SCC (DL) Ch.	SCC (DL) Freq. [MHz]	DL Ant. Config.	SCC Band	SCC BW [MHz]	SCC (DL) Ch.	SCC (DL) Freq. [MHz]	DL Ant. Config.	LTE Tx.Power with DL CA Enabled	LTE Single Carrier Tx Power (dBm)
CA_12A-[66A] (1)	LTE B66	5	131997	1712.5	QPSK	1	12	66461	2112.5	4x4	LTE B12	10	5095	737.5	2x2	-	-	-	-	-	-	-	-	-	-	23.35	23.28
CA_12A-[66A] (2)	LTE B66	5	131997	1712.5	QPSK	1	12	66461	2112.5	4x4	LTE B12	10	5095	737.5	2x2	-	-	-	-	-	-	-	-	-	-	23.35	23.28
CA_66A-[66C]	LTE B66	5	131997	1712.5	QPSK	1	12	66461	2112.5	2x2	LTE B66	20	67038	2170.2	4x4	LTE B66	20	67236	2190	4x4	-	-	-	-	-	23.35	23.28
CA_[66C]-66A	LTE B66	5	131997	1712.5	QPSK	1	12	66461	2112.5	4x4	LTE B66	20	66578	2124.2	4x4	LTE B66	20	67236	2190	2x2	-	-	-	-	-	23.26	23.28
CA_[66A]-66C	LTE B66	5	131997	1712.5	QPSK	1	12	66461	2112.5	4x4	LTE B66	20	67038	2170.2	2x2	LTE B66	20	67236	2190	2x2	-	-	-	-	-	23.30	23.28
CA_66C-[66A]	LTE B66	5	131997	1712.5	QPSK	1	12	66461	2112.5	2x2	LTE B66	20	66578	2124.2	2x2	LTE B66	20	67236	2190	4x4	-	-	-	-	-	23.38	23.28
CA_[66A]-[66C]	LTE B66	5	131997	1712.5	QPSK	1	12	66461	2112.5	4x4	LTE B66	20	67038	2170.2	4x4	LTE B66	20	67236	2190	4x4	-	-	-	-	-	23.34	23.28
CA_[66C]-[66A]	LTE B66	5	131997	1712.5	QPSK	1	12	66461	2112.5	4x4	LTE B66	20	66578	2124.2	4x4	LTE B66	20	67236	2190	4x4	-	-	-	-	-	23.37	23.28
CA_2A-2A-[66A]-71A	LTE B66	5	131997	1712.5	QPSK	1	12	66461	2112.5	4x4	LTE B2	20	900	1960	2x2	LTE B2	20	700	1940	2x2	LTE B71	20	68761	634.5	2x2	23.34	23.28
CA_[2A]-2A-66A-71A	LTE B66	5	131997	1712.5	QPSK	1	12	66461	2112.5	2x2	LTE B2	20	900	1960	4x4	LTE B2	20	700	1940	2x2	LTE B71	20	68761	634.5	2x2	23.36	23.28
CA_[2A]-2A-[66A]-71A	LTE B66	5	131997	1712.5	QPSK	1	12	66461	2112.5	4x4	LTE B2	20	900	1960	4x4	LTE B2	20	700	1940	2x2	LTE B71	20	68761	634.5	2x2	23.37	23.28
CA_[2A]-[2A]-66A-71A	LTE B66	5	131997	1712.5	QPSK	1	12	66461	2112.5	2x2	LTE B2	20	900	1960	4x4	LTE B2	20	700	1940	4x4	LTE B71	20	68761	634.5	2x2	23.36	23.28
CA_[2A]-[2A]-[66A]-71A	LTE B66	5	131997	1712.5	QPSK	1	12	66461	2112.5	4x4	LTE B2	20	900	1960	4x4	LTE B2	20	700	1940	4x4	LTE B71	20	68761	634.5	2x2	23.38	23.28
CA_2A-5A-48A-[66A]	LTE B66	5	131997	1712.5	QPSK	1	12	66461	2112.5	4x4	LTE B2	20	900	1960	2x2	LTE B5	10	2525	881.5	2x2	LTE B48	20	55990	3625	2x2	23.21	23.28
CA_2A-5A-[48A]-66A	LTE B66	5	131997	1712.5	QPSK	1	12	66461	2112.5	2x2	LTE B2	20	900	1960	2x2	LTE B5	10	2525	881.5	2x2	LTE B48	20	55990	3625	4x4	23.18	23.28
CA_2A-5A-[48A]-[66A]	LTE B66	5	131997	1712.5	QPSK	1	12	66461	2112.5	4x4	LTE B2	20	900	1960	2x2	LTE B5	10	2525	881.5	2x2	LTE B48	20	55990	3625	4x4	23.24	23.28
CA_[2A]-5A-48A-66A	LTE B66	5	131997	1712.5	QPSK	1	12	66461	2112.5	2x2	LTE B2	20	900	1960	4x4	LTE B5	10	2525	881.5	2x2	LTE B48	20	55990	3625	2x2	23.13	23.28
CA_[2A]-5A-48A-[66A]	LTE B66	5	131997	1712.5	QPSK	1	12	66461	2112.5	4x4	LTE B2	20	900	1960	4x4	LTE B5	10	2525	881.5	2x2	LTE B48	20	55990	3625	2x2	23.26	23.28
CA_[2A]-5A-[48A]-66A	LTE B66	5	131997	1712.5	QPSK	1	12	66461	2112.5	2x2	LTE B2	20	900	1960	4x4	LTE B5	10	2525	881.5	2x2	LTE B48	20	55990	3625	4x4	23.24	23.28
CA_[2A]-5A-[48A]-[66A]	LTE B66	5	131997	1712.5	QPSK	1	12	66461	2112.5	4x4	LTE B2	20	900	1960	4x4	LTE B5	10	2525	881.5	2x2	LTE B48	20	55990	3625	4x4	23.33	23.28
CA_2A-12A-[66C]	LTE B66	5	131997	1712.5	QPSK	1	12	66461	2112.5	4x4	LTE B66	20	66578	2124.2	4x4	LTE B2	20	900	1960	2x2	LTE B12	10	5095	737.5	2x2	23.36	23.28
CA_[2A]-12A-66C	LTE B66	5	131997	1712.5	QPSK	1	12	66461	2112.5	2x2	LTE B66	20	66578	2124.2	2x2	LTE B2	20	900	1960	4x4	LTE B12	10	5095	737.5	2x2	23.34	23.28
CA_[2A]-12A-[66C]	LTE B66	5	131997	1712.5	QPSK	1	12	66461	2112.5	4x4	LTE B66	20	66578	2124.2	4x4	LTE B2	20	900	1960	4x4	LTE B12	10	5095	737.5	2x2	23.34	23.28
CA_2A-13A-[66C]	LTE B66	5	131997	1712.5	QPSK	1	12	66461	2112.5	4x4	LTE B66	20	66578	2124.2	4x4	LTE B2	20	900	1960	2x2	LTE B13	10	5230	751	2x2	23.35	23.28
CA_[2A]-13A-66C	LTE B66	5	131997	1712.5	QPSK	1	12	66461	2112.5	2x2	LTE B66	20	66578	2124.2	2x2	LTE B2	20	900	1960	4x4	LTE B13	10	5230	751	2x2	23.36	23.28
CA_[2A]-13A-[66C]	LTE B66	5	131997	1712.5	QPSK	1	12	66461	2112.5	4x4	LTE B66	20	66578	2124.2	4x4	LTE B2	20	900	1960	4x4	LTE B13	10	5230	751	2x2	23.32	23.28
CA_2A-29A-30A-[66A]	LTE B66	5	131997	1712.5	QPSK	1	12	66461	2112.5	4x4	LTE B2	20	900	1960	2x2	LTE B29	10	9715	722.5	2x2	LTE B30	10	9820	2355	2x2	23.38	23.28
CA_2A-29A-[30A]-66A	LTE B66	5	131997	1712.5	QPSK	1	12	66461	2112.5	2x2	LTE B2	20	900	1960	2x2	LTE B29	10	9715	722.5	2x2	LTE B30	10	9820	2355	4x4	23.32	23.28
CA_2A-29A-[30A]-[66A]	LTE B66	5	131997	1712.5	QPSK	1	12	66461	2112.5	4x4	LTE B2	20	900	1960	2x2	LTE B29	10	9715	722.5	2x2	LTE B30	10	9820	2355	4x4	23.23	23.28
CA_[2A]-29A-30A-66A	LTE B66	5	131997	1712.5	QPSK	1	12	66461	2112.5	2x2	LTE B2	20	900	1960	4x4	LTE B29	10	9715	722.5	2x2	LTE B30	10	9820	2355	2x2	23.36	23.28
CA_[2A]-29A-30A-[66A]	LTE B66	5	131997	1712.5	QPSK	1	12	66461	2112.5	4x4	LTE B2	20	900	1960	4x4	LTE B29	10	9715	722.5	2x2	LTE B30	10	9820	2355	2x2	23.37	23.28
CA_[2A]-29A-[30A]-66A	LTE B66	5	131997	1712.5	QPSK	1	12	66461	2112.5	2x2	LTE B2	20	900	1960	4x4	LTE B29	10	9715	722.5	2x2	LTE B30	10	9820	2355	4x4	23.34	23.28
CA_[2A]-29A-[30A]-[66A]	LTE B66	5	131997	1712.5	QPSK	1	12	66461	2112.5	4x4	LTE B2	20	900	1960	4x4	LTE B29	10	9715	722.5	2x2	LTE B30	10	9820	2355	4x4	23.38	23.28
CA_2A-46A-46A-[66A]	LTE B66	5	131997	1712.5	QPSK	1	12	66461	2112.5	4x4	LTE B2	20	900	1960	2x2	LTE B46	20	50665	5537.5	2x2	LTE B46	20	47090	5180	2x2	23.39	23.28
CA_[2A]-46A-46A-66A	LTE B66	5	131997	1712.5	QPSK	1	12	66461	2112.5	2x2	LTE B2	20	900	1960	4x4	LTE B46	20	50665	5537.5	2x2	LTE B46	20	47090	5180	2x2	23.31	23.28
CA_[2A]-46A-46A-[66A]	LTE B66	5	131997	1712.5	QPSK	1	12	66461	2112.5	4x4	LTE B2	20	900	1960	4x4	LTE B46	20	50665	5537.5	2x2	LTE B46	20	47090	5180	2x2	23.35	23.28
CA_2A-46A-48A-[66A]	LTE B66	5	131997	1712.5	QPSK	1	12	66461	2112.5	4x4	LTE B2	20	900	1960	2x2	LTE B46	20	50665	5537.5	2x2	LTE B48	20	55990	3625	2x2	23.36	23.28
CA_2A-46A-[48A]-66A	LTE B66	5	131997	1712.5	QPSK	1	12	66461	2112.5	2x2	LTE B2	20	900	1960	2x2	LTE B46	20	50665	5537.5	2x2	LTE B48	20	55990	3625	4x4	23.17	23.28
CA_2A-46A-[48A]-[66A]	LTE B66	5	131997	1712.5	QPSK	1	12	66461	2112.5	4x4	LTE B2	20	900	1960	2x2	LTE B46	20	50665	5537.5	2x2	LTE B48	20	55990	3625	4x4	23.34	23.28
CA_[2A]-46A-48A-66A	LTE B66	5	131997	1712.5	QPSK	1	12	66461	2112.5	2x2	LTE B2	20	900	1960	4x4	LTE B46	20	50665	5537.5	2x2	LTE B48	20	55990	3625	2x2	23.21	23.28
CA_[2A]-46A-48A-[66A]	LTE B66	5	131997	1712.5	QPSK	1	12	66461	2112.5	4x4	LTE B2	20	900	1960	4x4	LTE B46	20	50665	5537.5	2x2	LTE B48	20	55990	3625	2x2	23.22	23.28
CA_[2A]-46A-[48A]-66A	LTE B66	5	131997	1712.5	QPSK	1	12	66461	2112.5	2x2	LTE B2	20	900	1960	4x4	LTE B46	20	50665	5537.5	2x2	LTE B48	20	55990	3625	4x4	23.26	23.28
CA_[2A]-46A-[48A]-[66A]	LTE B66	5	131997	1712.5	QPSK	1	12	66461	2112.5	4x4	LTE B2	20	900	1960	4x4	LTE B46	20	50665	5537.5	2x2	LTE B48	20	55990	3625	4x4	23.19	23.28
CA_2A-66A-[66A]-71A	LTE B66	5	131997	1712.5	QPSK	1	12	66461	2112.5	2x2	LTE B66	20	67236	2190	4x4	LTE B2	20	900	1960	2x2	LTE B71	20	68761	634.5	2x2	23.37	23.28
CA_2A-[66A]-66A-71A	LTE B66	5	131997	1712.5	QPSK	1	12	66461	2112.5	4x4	LTE B66	20	67236	2190	2x2	LTE B2	20	900	1960	2x2	LTE B71	20	68761	634.5	2x2	23.35	23.28
CA_2A-[66A]-[66A]-71A	LTE B66	5	131997	1712.5	QPSK	1	12	66461	2112.5	4x4	LTE B66	20	67236	2190	4x4	LTE B2	20	900	1960	2x2	LTE B71	20	68761	634.5	2x2	23.32	23.28
CA_[2A]-66A-66A-71A	LTE B66	5	131997	1712.5	QPSK	1	12	66461	2112.5	2x2	LTE B66	20	67236	2190	2x2	LTE B2	20	900	1960	4x4	LTE B71	20	68761	634.5	2x2	23.34	23.28
CA_[2A]-66A-[66A]-71A	LTE B66	5	131997	1712.5	QPSK	1	12	66461	2112.5	2x2	LTE B66	20	67236	2190	4x4	LTE B2	20	900	1960	4x4	LTE B71	20	68761	634.5	2x2	23.36	23.28
CA_[2A]-[66A]-66A-71A	LTE B66	5	131997	1712.5	QPSK	1	12	66461	2112.5	4x4	LTE B66	20	67236	2190	2x2	LTE B2	20	900	1960	4x4	LTE B71	20	68761	634.5	2x2	23.36	23.28
CA_[2A]-[66A]-[66A]-71A	LTE B66	5	131997	1712.5	QPSK	1	12	66461	2112.5	4x4	LTE B66	20	67236	2190	4x4	LTE B2	20	900	1960	4x4	LTE B71	20	68761	634.5	2x2	23.35	23.28
CA_2C-66A-[66A]	LTE B66	5	131997	1712.5	QPSK	1	12	66461	2112.5	2x2	LTE B66	20	67236	2190	4x4	LTE B2	20	900	1960	2x2	LTE B2	20	702	1940.2	2x2	23.37	23.28
CA_2C-[66A]-66A	LTE B66	5	131997	1712.5	QPSK	1	12	66461	2112.5	4x4	LTE B66	20	67236	2190	2x2	LTE B2	20	900	1960	2x2	LTE B2	20	702	1940.2	2x2	23.35	23.28
CA_2C-[66A]-[66A]	LTE B66	5	131997	1712.5	QPSK	1	12	66461	2112.5	4x4	LTE B66	20	67236	2190	4x4	LTE B2	20	900	1960	2x2	LTE B2	20	702	1940.2	2x2	23.31	23.28
CA_[2C]-66A-66A	LTE B66	5	131997	1712.5	QPSK	1	12	66461	2112.5	2x2	LTE B66	20	67236	2190	2x2	LTE B2	20	900	1960	4x4	LTE B2	20	702	1940.2	4x4	23.34	23.28
CA_[2C]-66A-[66A]	LTE B66	5	131997	1712.5	QPSK	1	12	66461	2112.5	2x2	LTE B66	20	67236	2190	4x4	LTE B2	20	900	1960	4x4	LTE B2	20	702	1940.2	4x4	23.33	23.28
CA_[2C]-[66A]-66A	LTE B66	5	131997	1712.5	QPSK	1	12	66461	2112.5	4x4	LTE B66	20	67236	2190	2x2	LTE B2	20	900	1960	4x4	LTE B2	20	702	1940.2	4x4	23.36	23.28
CA_[2C]-[66A]-[66A]	LTE B66	5	131997	1712.5	QPSK	1	12	66461	2112.5	4x4	LTE B66	20	67236	2190	4x4	LTE B2	20	900	1960	4x4	LTE B2	20	702	1940.2	4x4	23.34	23.28
CA_2A-[66C]-71A	LTE B66	5	131997	1712.5	QPSK	1	12	66461	2112.5	4x4	LTE B66	20	66578	2124.2	4x4	LTE B2	20	900	1960	2x2	LTE B71	20	68761	634.5	2x2	23.33	23.28
CA_[2A]-66C-71A	LTE B66	5	131997	1712.5	QPSK	1	12	66461	2112.5	2x2	LTE B66	20	66578	2124.2	2x2	LTE B2	20	900	1960	4x4	LTE B71	20	68761	634.5	2x2	23.32	23.28
CA_[2A]-[66C]-71A	LTE B66	5	131997	1712.5	QPSK	1	12	66461	2112.5	4x4	LTE B66	20	66578	2124.2	4x4	LTE B2	20	900	1960	4x4	LTE B71	20	68761	634.5	2x2	23.38	23.28
CA_5A-5A-[66A]-66A	LTE B66	5	131997	1712.5	QPSK	1	12	66461	2112.5	4x4	LTE B66	20	67236	2190	2x2	LTE B5	10	2525	881.5	2x2	LTE B5	5	2425	871.5	2x2	23.41	23.28
CA_5A-5A-66A-[66A]	LTE B66	5	131997	1712.5	QPSK	1	12	66461	2112.5	2x2	LTE B66	20	67236	2190	4x4	LTE B5	10	2525	881.5	2x2	LTE B5	5	2425	871.5	2x2	23.33	23.28
CA_5A-5A-[66A]-[66A]	LTE B66	5	131997	1712.5	QPSK	1	12	66461	2112.5	4x4	LTE B66	20	67236	2190	4x4	LTE B5	10	2525	881.5	2x2	LTE B5	5	2425	871.5	2x2	23.34	23.28
CA_5A-5A-[66B]	LTE B66	5	131997	1712.5	QPSK	1	12	66461	2112.5	4x4	LTE B66	15	66554	2121.8	4x4	LTE B5	10	2525	881.5	2x2	LTE B5	5	2425	871.5	2x2	23.40	23.28
CA_5A-5A-[66C]	LTE B66	5	131997	1712.5	QPSK	1	12	66461	2112.5	4x4	LTE B66	20	66578	2124.2	4x4	LTE B5	10	2525	881.5	2x2	LTE B5	5	2425	871.5	2x2	23.35	23.28
CA_13A-48A-[66B]	LTE B66	5	131997	1712.5	QPSK	1	12	66461	2112.5	4x4	LTE B66	15	66554	2121.8	4x4	LTE B13	10	5230	751	2x2	LTE B48	20	55990	3625	2x2	23.31	23.28
CA_13A-[48A]-66B	LTE B66	5	131997	1712.5	QPSK	1	12	66461	2112.5	2x2	LTE B66	15	66554	2121.8	2x2	LTE B13	10	5230	751	2x2	LTE B48	20	55990	3625	4x4	23.17	23.28
CA_13A-[48A]-[66B]	LTE B66	5	131997	1712.5	QPSK	1	12	66461	2112.5	4x4	LTE B66	15	66554	2121.8	4x4	LTE B13	10	5230	751	2x2	LTE B48	20	55990	3625	4x4	23.17	23.28
CA_13A-48A-[66C]	LTE B66	5	131997	1712.5	QPSK	1	12	66461	2112.5	4x4	LTE B66	20	66578	2124.2	4x4	LTE B13	10	5230	751	2x2	LTE B48	20	55990	3625	2x2	23.18	23.28
CA_13A-[48A]-66C	LTE B66	5	131997	1712.5	QPSK	1	12	66461	2112.5	2x2	LTE B66	20	66578	2124.2	2x2	LTE B13	10	5230	751	2x2	LTE B48	20	55990	3625	4x4	23.16	23.28
CA_13A-[48A]-[66C]	LTE B66	5	131997	1712.5	QPSK	1	12	66461	2112.5	4x4	LTE B66	20	66578	2124.2	4x4	LTE B13	10	5230	751	2x2	LTE B48	20	55990	3625	4x4	23.16	23.28
CA_29A-30A-[66A]-66A	LTE B66	5	131997	1712.5	QPSK	1	12	66461	2112.5	4x4	LTE B66	20	67236	2190	2x2	LTE B29	10	9715	722.5	2x2	LTE B30	10	9820	2355	2x2	23.34	23.28
CA_29A-30A-66A-[66A]	LTE B66	5	131997	1712.5	QPSK	1	12	66461	2112.5	2x2	LTE B66	20	67236	2190	4x4	LTE B29	10	9715	722.5	2x2	LTE B30	10	9820	2355	2x2	23.33	23.28
CA_29A-30A-[66A]-[66A]	LTE B66	5	131997	1712.5	QPSK	1	12	66461	2112.5	4x4	LTE B66	20	67236	2190	4x4	LTE B29	10	9715	722.5	2x2	LTE B30	10	9820	2355	2x2	23.37	23.28
CA_29A-[30A]-66A-66A	LTE B66	5	131997	1712.5	QPSK	1	12	66461	2112.5	2x2	LTE B66	20	67236	2190	2x2	LTE B29	10	9715	722.5	2x2	LTE B30	10	9820	2355	4x4	23.37	23.28
CA_29A-[30A]-[66A]-66A	LTE B66	5	131997	1712.5	QPSK	1	12	66461	2112.5	4x4	LTE B66	20	67236	2190	2x2	LTE B29	10	9715	722.5	2x2	LTE B30	10	9820	2355	4x4	23.35	23.28
CA_29A-[30A]-66A-[66A]	LTE B66	5	131997	1712.5	QPSK	1	12	66461	2112.5	2x2	LTE B66	20	67236	2190	4x4	LTE B29	10	9715	722.5	2x2	LTE B30	10	9820	2355	4x4	23.36	23.28
CA_29A-[30A]-[66A]-[66A]	LTE B66	5	131997	1712.5	QPSK	1	12	66461	2112.5	4x4	LTE B66	20	67236	2190	4x4	LTE B29	10	9715	722.5	2x2	LTE B30	10	9820	2355	4x4	23.33	23.28
CA_48A-48A-66A-[66A]	LTE B66	5	131997	1712.5	QPSK	1	12	66461	2112.5	2x2	LTE B66	20	67236	2190	4x4	LTE B48	20	55990	3625	2x2	LTE B48	20	55340	3560	2x2	23.21	23.28
CA_48A-48A-[66A]-66A	LTE B66	5	131997	1712.5	QPSK	1	12	66461	2112.5	4x4	LTE B66	20	67236	2190	2x2	LTE B48	20	55990	3625	2x2	LTE B48	20	55340	3560	2x2	23.31	23.28
CA_48A-48A-[66A]-[66A]	LTE B66	5	131997	1712.5	QPSK	1	12	66461	2112.5	4x4	LTE B66	20	67236	2190	4x4	LTE B48	20	55990	3625	2x2	LTE B48	20	55340	3560	2x2	23.35	23.28
CA_[48A]-48A-66A-66A	LTE B66	5	131997	1712.5	QPSK	1	12	66461	2112.5	2x2	LTE B66	20	67236	2190	2x2	LTE B48	20	55990	3625	4x4	LTE B48	20	55340	3560	2x2	23.18	23.28
CA_[48A]-48A-66A-[66A]	LTE B66	5	131997	1712.5	QPSK	1	12	66461	2112.5	2x2	LTE B66	20	67236	2190	4x4	LTE B48	20	55990	3625	4x4	LTE B48	20	55340	3560	2x2	23.24	23.28
CA_[48A]-48A-[66A]-66A	LTE B66	5	131997	1712.5	QPSK	1	12	66461	2112.5	4x4	LTE B66	20	67236	2190	2x2	LTE B48	20	55990	3625	4x4	LTE B48	20	55340	3560	2x2	23.22	23.28
CA_[48A]-48A-[66A]-[66A]	LTE B66	5	131997	1712.5	QPSK	1	12	66461	2112.5	4x4	LTE B66	20	67236	2190	4x4	LTE B48	20	55990	3625	4x4	LTE B48	20	55340	3560	2x2	23.19	23.28
CA_[48A]-[48A]-66A-66A	LTE B66	5	131997	1712.5	QPSK	1	12	66461	2112.5	2x2	LTE B66	20	67236	2190	2x2	LTE B48	20	55990	3625	4x4	LTE B48	20	55340	3560	4x4	23.14	23.28
CA_[48A]-[48A]-66A-[66A]	LTE B66	5	131997	1712.5	QPSK	1	12	66461	2112.5	2x2	LTE B66	20	67236	2190	4x4	LTE B48	20	55990	3625	4x4	LTE B48	20	55340	3560	4x4	23.25	23.28
CA_[48A]-[48A]-[66A]-66A	LTE B66	5	131997	1712.5	QPSK	1	12	66461	2112.5	4x4	LTE B66	20	67236	2190	2x2	LTE B48	20	55990	3625	4x4	LTE B48	20	55340	3560	4x4	23.21	23.28
CA_[48A]-[48A]-[66A]-[66A]	LTE B66	5	131997	1712.5	QPSK	1	12	66461	2112.5	4x4	LTE B66	20	67236	2190	4x4	LTE B48	20	55990	3625	4x4	LTE B48	20	55340	3560	4x4	23.20	23.28
CA_48A-48A-[66B]	LTE B66	5	131997	1712.5	QPSK	1	12	66461	2112.5	4x4	LTE B66	15	66554	2121.8	4x4	LTE B48	20	55990	3625	2x2	LTE B48	20	55340	3560	2x2	23.19	23.28
CA_[48A]-48A-66B	LTE B66	5	131997	1712.5	QPSK	1	12	66461	2112.5	2x2	LTE B66	15	66554	2121.8	2x2	LTE B48	20	55990	3625	4x4	LTE B48	20	55340	3560	2x2	23.16	23.28
CA_[48A]-48A-[66B]	LTE B66	5	131997	1712.5	QPSK	1	12	66461	2112.5	4x4	LTE B66	15	66554	2121.8	4x4	LTE B48	20	55990	3625	4x4	LTE B48	20	55340	3560	2x2	23.15	23.28
CA_[48A]-[48A]-66B	LTE B66	5	131997	1712.5	QPSK	1	12	66461	2112.5	2x2	LTE B66	15	66554	2121.8	2x2	LTE B48	20	55990	3625	4x4	LTE B48	20	55340	3560	4x4	23.13	23.28
CA_[48A]-[48A]-[66B]	LTE B66	5	131997	1712.5	QPSK	1	12	66461	2112.5	4x4	LTE B66	15	66554	2121.8	4x4	LTE B48	20	55990	3625	4x4	LTE B48	20	55340	3560	4x4	23.19	23.28
CA_48A-48A-[66C]	LTE B66	5	131997	1712.5	QPSK	1	12	66461	2112.5	4x4	LTE B66	20	66578	2124.2	4x4	LTE B48	20	55990	3625	2x2	LTE B48	20	55340	3560	2x2	23.20	23.28
CA_[48A]-48A-66C	LTE B66	5	131997	1712.5	QPSK	1	12	66461	2112.5	2x2	LTE B66	20	66578	2124.2	2x2	LTE B48	20	55990	3625	4x4	LTE B48	20	55340	3560	2x2	23.16	23.28
CA_[48A]-48A-[66C]	LTE B66	5	131997	1712.5	QPSK	1	12	66461	2112.5	4x4	LTE B66	20	66578	2124.2	4x4	LTE B48	20	55990	3625	4x4	LTE B48	20	55340	3560	2x2	23.29	23.28
CA_[48A]-[48A]-66C	LTE B66	5	131997	1712.5	QPSK	1	12	66461	2112.5	2x2	LTE B66	20	66578	2124.2	2x2	LTE B48	20	55990	3625	4x4	LTE B48	20	55340	3560	4x4	23.18	23.28
CA_[48A]-[48A]-[66C]	LTE B66	5	131997	1712.5	QPSK	1	12	66461	2112.5	4x4	LTE B66	20	66578	2124.2	4x4	LTE B48	20	55990	3625	4x4	LTE B48	20	55340	3560	4x4	23.32	23.28
CA_[48C]-66A-[66A]	LTE B66	5	131997	1712.5	QPSK	1	12	66461	2112.5	2x2	LTE B66	20	67236	2190	4x4	LTE B48	20	55990	3625	4x4	LTE B48	20	56188	3644.8	4x4	23.28	23.28
CA_[48C]-[66A]-66A	LTE B66	5	131997	1712.5	QPSK	1	12	66461	2112.5	4x4	LTE B66	20	67236	2190	2x2	LTE B48	20	55990	3625	4x4	LTE B48	20	56188	3644.8	4x4	23.26	23.28
CA_[48C]-[66A]-[66A]	LTE B66	5	131997	1712.5	QPSK	1	12	66461	2112.5	4x4	LTE B66	20	67236	2190	4x4	LTE B48	20	55990	3625	4x4	LTE B48	20	56188	3644.8	4x4	23.18	23.28

© 2021 PCTEST

Table J-20
Maximum Output Powers

	PCC										SCC 1					SCC 2					SCC 3					SCC 4					Power	
Combination	PCC Band	PCC BW [MHz]	PCC (UL) Ch.	PCC (UL) Freq. [MHz]	Mod.	PCC UL# RB	PCC UL RB Offset	PCC (DL) Ch.	PCC (DL) Freq. [MHz]	DL Ant. Config.	SCC Band	SCC BW [MHz]	SCC (DL) Ch.	SCC (DL) Freq. [MHz]	DL Ant. Config.	SCC Band	SCC BW [MHz]	SCC (DL) Ch.	SCC (DL) Freq. [MHz]	DL Ant. Config.	SCC Band	SCC BW [MHz]	SCC (DL) Ch.	SCC (DL) Freq. [MHz]	DL Ant. Config.	SCC Band	SCC BW [MHz]	SCC (DL) Ch.	SCC (DL) Freq. [MHz]	DL Ant. Config.	LTE Tx.Power with DL CA Enabled	LTE Single Carrier Tx Power (dBm)
CA_2A-2A-5A-30A-[66A]	LTE B66	5	131997	1712.5	QPSK	1	12	66461	2112.5	4x4	LTE B2	20	900	1960	2x2	LTE B2	20	700	1940	2x2	LTE B5	10	2525	881.5	2x2	LTE B30	10	9820	2355	2x2	23.26	23.28
CA_2A-2A-5A-[30A]-66A	LTE B66	5	131997	1712.5	QPSK	1	12	66461	2112.5	2x2	LTE B2	20	900	1960	2x2	LTE B2	20	700	1940	2x2	LTE B5	10	2525	881.5	2x2	LTE B30	10	9820	2355	4x4	23.28	23.28
CA_2A-2A-5A-[30A]-[66A]	LTE B66	5	131997	1712.5	QPSK	1	12	66461	2112.5	4x4	LTE B2	20	900	1960	2x2	LTE B2	20	700	1940	2x2	LTE B5	10	2525	881.5	2x2	LTE B30	10	9820	2355	4x4	23.21	23.28
CA_[2A]-2A-5A-30A-66A	LTE B66	5	131997	1712.5	QPSK	1	12	66461	2112.5	2x2	LTE B2	20	900	1960	4x4	LTE B2	20	700	1940	2x2	LTE B5	10	2525	881.5	2x2	LTE B30	10	9820	2355	2x2	23.19	23.28
CA_[2A]-2A-5A-30A-[66A]	LTE B66	5	131997	1712.5	QPSK	1	12	66461	2112.5	4x4	LTE B2	20	900	1960	4x4	LTE B2	20	700	1940	2x2	LTE B5	10	2525	881.5	2x2	LTE B30	10	9820	2355	2x2	23.25	23.28
CA_[2A]-2A-5A-[30A]-66A	LTE B66	5	131997	1712.5	QPSK	1	12	66461	2112.5	2x2	LTE B2	20	900	1960	4x4	LTE B2	20	700	1940	2x2	LTE B5	10	2525	881.5	2x2	LTE B30	10	9820	2355	4x4	23.25	23.28
CA_[2A]-2A-5A-[30A]-[66A]	LTE B66	5	131997	1712.5	QPSK	1	12	66461	2112.5	4x4	LTE B2	20	900	1960	4x4	LTE B2	20	700	1940	2x2	LTE B5	10	2525	881.5	2x2	LTE B30	10	9820	2355	4x4	23.27	23.28
CA_[2A]-[2A]-5A-30A-66A	LTE B66	5	131997	1712.5	QPSK	1	12	66461	2112.5	2x2	LTE B2	20	900	1960	4x4	LTE B2	20	700	1940	4x4	LTE B5	10	2525	881.5	2x2	LTE B30	10	9820	2355	2x2	23.24	23.28
CA_[2A]-[2A]-5A-30A-[66A]	LTE B66	5	131997	1712.5	QPSK	1	12	66461	2112.5	4x4	LTE B2	20	900	1960	4x4	LTE B2	20	700	1940	4x4	LTE B5	10	2525	881.5	2x2	LTE B30	10	9820	2355	2x2	23.28	23.28
CA_[2A]-[2A]-5A-[30A]-66A	LTE B66	5	131997	1712.5	QPSK	1	12	66461	2112.5	2x2	LTE B2	20	900	1960	4x4	LTE B2	20	700	1940	4x4	LTE B5	10	2525	881.5	2x2	LTE B30	10	9820	2355	4x4	23.21	23.28
CA_[2A]-[2A]-5A-[30A]-[66A]	LTE B66	5	131997	1712.5	QPSK	1	12	66461	2112.5	4x4	LTE B2	20	900	1960	4x4	LTE B2	20	700	1940	4x4	LTE B5	10	2525	881.5	2x2	LTE B30	10	9820	2355	4x4	23.27	23.28
CA_2A-2A-5A-66A-[66A]	LTE B66	5	131997	1712.5	QPSK	1	12	66461	2112.5	2x2	LTE B66	20	67236	2190	4x4	LTE B2	20	900	1960	2x2	LTE B2	20	700	1940	2x2	LTE B5	10	2525	881.5	2x2	23.18	23.28
CA_2A-2A-5A-[66A]-66A	LTE B66	5	131997	1712.5	QPSK	1	12	66461	2112.5	4x4	LTE B66	20	67236	2190	2x2	LTE B2	20	900	1960	2x2	LTE B2	20	700	1940	2x2	LTE B5	10	2525	881.5	2x2	23.30	23.28
CA_2A-2A-5A-[66A]-[66A]	LTE B66	5	131997	1712.5	QPSK	1	12	66461	2112.5	4x4	LTE B66	20	67236	2190	4x4	LTE B2	20	900	1960	2x2	LTE B2	20	700	1940	2x2	LTE B5	10	2525	881.5	2x2	23.20	23.28
CA_[2A]-2A-5A-66A-66A	LTE B66	5	131997	1712.5	QPSK	1	12	66461	2112.5	2x2	LTE B66	20	67236	2190	2x2	LTE B2	20	900	1960	4x4	LTE B2	20	700	1940	2x2	LTE B5	10	2525	881.5	2x2	23.23	23.28
CA_[2A]-2A-5A-66A-[66A]	LTE B66	5	131997	1712.5	QPSK	1	12	66461	2112.5	2x2	LTE B66	20	67236	2190	4x4	LTE B2	20	900	1960	4x4	LTE B2	20	700	1940	2x2	LTE B5	10	2525	881.5	2x2	23.38	23.28
CA_[2A]-2A-5A-[66A]-66A	LTE B66	5	131997	1712.5	QPSK	1	12	66461	2112.5	4x4	LTE B66	20	67236	2190	2x2	LTE B2	20	900	1960	4x4	LTE B2	20	700	1940	2x2	LTE B5	10	2525	881.5	2x2	23.32	23.28
CA_[2A]-2A-5A-[66A]-[66A]	LTE B66	5	131997	1712.5	QPSK	1	12	66461	2112.5	4x4	LTE B66	20	67236	2190	4x4	LTE B2	20	900	1960	4x4	LTE B2	20	700	1940	2x2	LTE B5	10	2525	881.5	2x2	23.15	23.28
CA_[2A]-[2A]-5A-66A-66A	LTE B66	5	131997	1712.5	QPSK	1	12	66461	2112.5	2x2	LTE B66	20	67236	2190	2x2	LTE B2	20	900	1960	4x4	LTE B2	20	700	1940	4x4	LTE B5	10	2525	881.5	2x2	23.21	23.28
CA_[2A]-[2A]-5A-[66A]-66A	LTE B66	5	131997	1712.5	QPSK	1	12	66461	2112.5	4x4	LTE B66	20	67236	2190	2x2	LTE B2	20	900	1960	4x4	LTE B2	20	700	1940	4x4	LTE B5	10	2525	881.5	2x2	23.20	23.28
CA_[2A]-[2A]-5A-66A-[66A]	LTE B66	5	131997	1712.5	QPSK	1	12	66461	2112.5	2x2	LTE B66	20	67236	2190	4x4	LTE B2	20	900	1960	4x4	LTE B2	20	700	1940	4x4	LTE B5	10	2525	881.5	2x2	23.25	23.28
CA_[2A]-[2A]-5A-[66A]-[66A]	LTE B66	5	131997	1712.5	QPSK	1	12	66461	2112.5	4x4	LTE B66	20	67236	2190	4x4	LTE B2	20	900	1960	4x4	LTE B2	20	700	1940	4x4	LTE B5	10	2525	881.5	2x2	23.12	23.28
CA_2A-2A-5A-[66B]	LTE B66	5	131997	1712.5	QPSK	1	12	66461	2112.5	4x4	LTE B66	15	66554	2121.8	4x4	LTE B2	20	900	1960	2x2	LTE B2	20	700	1940	2x2	LTE B5	10	2525	881.5	2x2	23.12	23.28
CA_[2A]-2A-5A-66B	LTE B66	5	131997	1712.5	QPSK	1	12	66461	2112.5	2x2	LTE B66	15	66554	2121.8	2x2	LTE B2	20	900	1960	4x4	LTE B2	20	700	1940	2x2	LTE B5	10	2525	881.5	2x2	23.20	23.28
CA_[2A]-2A-5A-[66B]	LTE B66	5	131997	1712.5	QPSK	1	12	66461	2112.5	4x4	LTE B66	15	66554	2121.8	4x4	LTE B2	20	900	1960	4x4	LTE B2	20	700	1940	2x2	LTE B5	10	2525	881.5	2x2	23.33	23.28
CA_[2A]-[2A]-5A-66B	LTE B66	5	131997	1712.5	QPSK	1	12	66461	2112.5	2x2	LTE B66	15	66554	2121.8	2x2	LTE B2	20	900	1960	4x4	LTE B2	20	700	1940	4x4	LTE B5	10	2525	881.5	2x2	23.24	23.28
CA_[2A]-[2A]-5A-[66B]	LTE B66	5	131997	1712.5	QPSK	1	12	66461	2112.5	4x4	LTE B66	15	66554	2121.8	4x4	LTE B2	20	900	1960	4x4	LTE B2	20	700	1940	4x4	LTE B5	10	2525	881.5	2x2	23.20	23.28
CA_2A-2A-5A-[66C]	LTE B66	5	131997	1712.5	QPSK	1	12	66461	2112.5	4x4	LTE B66	20	66578	2124.2	4x4	LTE B2	20	900	1960	2x2	LTE B2	20	700	1940	2x2	LTE B5	10	2525	881.5	2x2	23.19	23.28
CA_[2A]-2A-5A-66C	LTE B66	5	131997	1712.5	QPSK	1	12	66461	2112.5	2x2	LTE B66	20	66578	2124.2	2x2	LTE B2	20	900	1960	4x4	LTE B2	20	700	1940	2x2	LTE B5	10	2525	881.5	2x2	23.20	23.28
CA_[2A]-2A-5A-[66C]	LTE B66	5	131997	1712.5	QPSK	1	12	66461	2112.5	4x4	LTE B66	20	66578	2124.2	4x4	LTE B2	20	900	1960	4x4	LTE B2	20	700	1940	2x2	LTE B5	10	2525	881.5	2x2	23.21	23.28
CA_[2A]-[2A]-5A-66C	LTE B66	5	131997	1712.5	QPSK	1	12	66461	2112.5	2x2	LTE B66	20	66578	2124.2	2x2	LTE B2	20	900	1960	4x4	LTE B2	20	700	1940	4x4	LTE B5	10	2525	881.5	2x2	23.21	23.28
CA_[2A]-[2A]-5A-[66C]	LTE B66	5	131997	1712.5	QPSK	1	12	66461	2112.5	4x4	LTE B66	20	66578	2124.2	4x4	LTE B2	20	900	1960	4x4	LTE B2	20	700	1940	4x4	LTE B5	10	2525	881.5	2x2	23.27	23.28
CA_2A-2A-5B-[66A]	LTE B66	5	131997	1712.5	QPSK	1	12	66461	2112.5	4x4	LTE B2	20	900	1960	2x2	LTE B2	20	700	1940	2x2	LTE B5	10	2525	881.5	2x2	LTE B5	5	2453	874.3	2x2	23.17	23.28
CA_[2A]-2A-5B-66A	LTE B66	5	131997	1712.5	QPSK	1	12	66461	2112.5	2x2	LTE B2	20	900	1960	4x4	LTE B2	20	700	1940	2x2	LTE B5	10	2525	881.5	2x2	LTE B5	5	2453	874.3	2x2	23.20	23.28
CA_[2A]-2A-5B-[66A]	LTE B66	5	131997	1712.5	QPSK	1	12	66461	2112.5	4x4	LTE B2	20	900	1960	4x4	LTE B2	20	700	1940	2x2	LTE B5	10	2525	881.5	2x2	LTE B5	5	2453	874.3	2x2	23.21	23.28
CA_[2A]-[2A]-5B-66A	LTE B66	5	131997	1712.5	QPSK	1	12	66461	2112.5	2x2	LTE B2	20	900	1960	4x4	LTE B2	20	700	1940	4x4	LTE B5	10	2525	881.5	2x2	LTE B5	5	2453	874.3	2x2	23.18	23.28
CA_[2A]-[2A]-5B-[66A]	LTE B66	5	131997	1712.5	QPSK	1	12	66461	2112.5	4x4	LTE B2	20	900	1960	4x4	LTE B2	20	700	1940	4x4	LTE B5	10	2525	881.5	2x2	LTE B5	5	2453	874.3	2x2	23.14	23.28
CA_2A-2A-12A-30A-[66A]	LTE B66	5	131997	1712.5	QPSK	1	12	66461	2112.5	4x4	LTE B2	20	900	1960	2x2	LTE B2	20	700	1940	2x2	LTE B12	10	5095	737.5	2x2	LTE B30	10	9820	2355	2x2	23.23	23.28
CA_2A-2A-12A-[30A]-66A	LTE B66	5	131997	1712.5	QPSK	1	12	66461	2112.5	2x2	LTE B2	20	900	1960	2x2	LTE B2	20	700	1940	2x2	LTE B12	10	5095	737.5	2x2	LTE B30	10	9820	2355	4x4	23.21	23.28
CA_2A-2A-12A-[30A]-[66A]	LTE B66	5	131997	1712.5	QPSK	1	12	66461	2112.5	4x4	LTE B2	20	900	1960	2x2	LTE B2	20	700	1940	2x2	LTE B12	10	5095	737.5	2x2	LTE B30	10	9820	2355	4x4	23.22	23.28
CA_[2A]-2A-12A-30A-66A	LTE B66	5	131997	1712.5	QPSK	1	12	66461	2112.5	2x2	LTE B2	20	900	1960	4x4	LTE B2	20	700	1940	2x2	LTE B12	10	5095	737.5	2x2	LTE B30	10	9820	2355	2x2	23.09	23.28
CA_[2A]-2A-12A-30A-[66A]	LTE B66	5	131997	1712.5	QPSK	1	12	66461	2112.5	4x4	LTE B2	20	900	1960	4x4	LTE B2	20	700	1940	2x2	LTE B12	10	5095	737.5	2x2	LTE B30	10	9820	2355	2x2	23.30	23.28
CA_[2A]-2A-12A-[30A]-66A	LTE B66	5	131997	1712.5	QPSK	1	12	66461	2112.5	2x2	LTE B2	20	900	1960	4x4	LTE B2	20	700	1940	2x2	LTE B12	10	5095	737.5	2x2	LTE B30	10	9820	2355	4x4	23.23	23.28
CA_[2A]-2A-12A-[30A]-[66A]	LTE B66	5	131997	1712.5	QPSK	1	12	66461	2112.5	4x4	LTE B2	20	900	1960	4x4	LTE B2	20	700	1940	2x2	LTE B12	10	5095	737.5	2x2	LTE B30	10	9820	2355	4x4	23.21	23.28
CA_[2A]-[2A]-12A-30A-66A	LTE B66	5	131997	1712.5	QPSK	1	12	66461	2112.5	2x2	LTE B2	20	900	1960	4x4	LTE B2	20	700	1940	4x4	LTE B12	10	5095	737.5	2x2	LTE B30	10	9820	2355	2x2	23.20	23.28
CA_[2A]-[2A]-12A-30A-[66A]	LTE B66	5	131997	1712.5	QPSK	1	12	66461	2112.5	4x4	LTE B2	20	900	1960	4x4	LTE B2	20	700	1940	4x4	LTE B12	10	5095	737.5	2x2	LTE B30	10	9820	2355	2x2	23.26	23.28
CA_[2A]-[2A]-12A-[30A]-66A	LTE B66	5	131997	1712.5	QPSK	1	12	66461	2112.5	2x2	LTE B2	20	900	1960	4x4	LTE B2	20	700	1940	4x4	LTE B12	10	5095	737.5	2x2	LTE B30	10	9820	2355	4x4	23.27	23.28
CA_[2A]-[2A]-12A-[30A]-[66A]	LTE B66	5	131997	1712.5	QPSK	1	12	66461	2112.5	4x4	LTE B2	20	900	1960	4x4	LTE B2	20	700	1940	4x4	LTE B12	10	5095	737.5	2x2	LTE B30	10	9820	2355	4x4	23.22	23.28
CA_2A-2A-12A-66A-[66A]	LTE B66	5	131997	1712.5	QPSK	1	12	66461	2112.5	2x2	LTE B66	20	67236	2190	4x4	LTE B2	20	900	1960	2x2	LTE B2	20	700	1940	2x2	LTE B12	10	5095	737.5	2x2	23.26	23.28
CA_2A-2A-12A-[66A]-66A	LTE B66	5	131997	1712.5	QPSK	1	12	66461	2112.5	4x4	LTE B66	20	67236	2190	2x2	LTE B2	20	900	1960	2x2	LTE B2	20	700	1940	2x2	LTE B12	10	5095	737.5	2x2	23.28	23.28
CA_2A-2A-12A-[66A]-[66A]	LTE B66	5	131997	1712.5	QPSK	1	12	66461	2112.5	4x4	LTE B66	20	67236	2190	4x4	LTE B2	20	900	1960	2x2	LTE B2	20	700	1940	2x2	LTE B12	10	5095	737.5	2x2	23.21	23.28
CA_[2A]-2A-12A-66A-66A	LTE B66	5	131997	1712.5	QPSK	1	12	66461	2112.5	2x2	LTE B66	20	67236	2190	2x2	LTE B2	20	900	1960	4x4	LTE B2	20	700	1940	2x2	LTE B12	10	5095	737.5	2x2	23.27	23.28
CA_[2A]-2A-12A-66A-[66A]	LTE B66	5	131997	1712.5	QPSK	1	12	66461	2112.5	2x2	LTE B66	20	67236	2190	4x4	LTE B2	20	900	1960	4x4	LTE B2	20	700	1940	2x2	LTE B12	10	5095	737.5	2x2	23.32	23.28
CA_[2A]-2A-12A-[66A]-66A	LTE B66	5	131997	1712.5	QPSK	1	12	66461	2112.5	4x4	LTE B66	20	67236	2190	2x2	LTE B2	20	900	1960	4x4	LTE B2	20	700	1940	2x2	LTE B12	10	5095	737.5	2x2	23.24	23.28
CA_[2A]-2A-12A-[66A]-[66A]	LTE B66	5	131997	1712.5	QPSK	1	12	66461	2112.5	4x4	LTE B66	20	67236	2190	4x4	LTE B2	20	900	1960	4x4	LTE B2	20	700	1940	2x2	LTE B12	10	5095	737.5	2x2	23.11	23.28
CA_[2A]-[2A]-12A-66A-66A	LTE B66	5	131997	1712.5	QPSK	1	12	66461	2112.5	2x2	LTE B66	20	67236	2190	2x2	LTE B2	20	900	1960	4x4	LTE B2	20	700	1940	4x4	LTE B12	10	5095	737.5	2x2	23.20	23.28
CA_[2A]-[2A]-12A-[66A]-66A	LTE B66	5	131997	1712.5	QPSK	1	12	66461	2112.5	4x4	LTE B66	20	67236	2190	2x2	LTE B2	20	900	1960	4x4	LTE B2	20	700	1940	4x4	LTE B12	10	5095	737.5	2x2	23.17	23.28
CA_[2A]-[2A]-12A-66A-[66A]	LTE B66	5	131997	1712.5	QPSK	1	12	66461	2112.5	2x2	LTE B66	20	67236	2190	4x4	LTE B2	20	900	1960	4x4	LTE B2	20	700	1940	4x4	LTE B12	10	5095	737.5	2x2	23.19	23.28
CA_[2A]-[2A]-12A-[66A]-[66A]	LTE B66	5	131997	1712.5	QPSK	1	12	66461	2112.5	4x4	LTE B66	20	67236	2190	4x4	LTE B2	20	900	1960	4x4	LTE B2	20	700	1940	4x4	LTE B12	10	5095	737.5	2x2	23.21	23.28
CA_2A-2A-12B-[66A]	LTE B66	5	131997	1712.5	QPSK	1	12	66461	2112.5	4x4	LTE B2	20	900	1960	2x2	LTE B2	20	700	1940	2x2	LTE B12	5	5095	737.5	2x2	LTE B12	5	5047	732.7	2x2	23.16	23.28
CA_[2A]-2A-12B-66A	LTE B66	5	131997	1712.5	QPSK	1	12	66461	2112.5	2x2	LTE B2	20	900	1960	4x4	LTE B2	20	700	1940	2x2	LTE B12	5	5095	737.5	2x2	LTE B12	5	5047	732.7	2x2	23.11	23.28
CA_[2A]-2A-12B-[66A]	LTE B66	5	131997	1712.5	QPSK	1	12	66461	2112.5	4x4	LTE B2	20	900	1960	4x4	LTE B2	20	700	1940	2x2	LTE B12	5	5095	737.5	2x2	LTE B12	5	5047	732.7	2x2	23.32	23.28
CA_[2A]-[2A]-12B-66A	LTE B66	5	131997	1712.5	QPSK	1	12	66461	2112.5	2x2	LTE B2	20	900	1960	4x4	LTE B2	20	700	1940	4x4	LTE B12	5	5095	737.5	2x2	LTE B12	5	5047	732.7	2x2	23.07	23.28
CA_[2A]-[2A]-12B-[66A]	LTE B66	5	131997	1712.5	QPSK	1	12	66461	2112.5	4x4	LTE B2	20	900	1960	4x4	LTE B2	20	700	1940	4x4	LTE B12	5	5095	737.5	2x2	LTE B12	5	5047	732.7	2x2	23.16	23.28
CA_2A-2A-13A-66A-[66A]	LTE B66	5	131997	1712.5	QPSK	1	12	66461	2112.5	2x2	LTE B66	20	67236	2190	4x4	LTE B2	20	900	1960	2x2	LTE B2	20	700	1940	2x2	LTE B13	10	5230	751	2x2	23.16	23.28
CA_2A-2A-13A-[66A]-66A	LTE B66	5	131997	1712.5	QPSK	1	12	66461	2112.5	4x4	LTE B66	20	67236	2190	2x2	LTE B2	20	900	1960	2x2	LTE B2	20	700	1940	2x2	LTE B13	10	5230	751	2x2	23.20	23.28
CA_2A-2A-13A-[66A]-[66A]	LTE B66	5	131997	1712.5	QPSK	1	12	66461	2112.5	4x4	LTE B66	20	67236	2190	4x4	LTE B2	20	900	1960	2x2	LTE B2	20	700	1940	2x2	LTE B13	10	5230	751	2x2	23.24	23.28
CA_[2A]-2A-13A-66A-66A	LTE B66	5	131997	1712.5	QPSK	1	12	66461	2112.5	2x2	LTE B66	20	67236	2190	2x2	LTE B2	20	900	1960	4x4	LTE B2	20	700	1940	2x2	LTE B13	10	5230	751	2x2	23.22	23.28
CA_[2A]-2A-13A-66A-[66A]	LTE B66	5	131997	1712.5	QPSK	1	12	66461	2112.5	2x2	LTE B66	20	67236	2190	4x4	LTE B2	20	900	1960	4x4	LTE B2	20	700	1940	2x2	LTE B13	10	5230	751	2x2	23.22	23.28
CA_[2A]-2A-13A-[66A]-66A	LTE B66	5	131997	1712.5	QPSK	1	12	66461	2112.5	4x4	LTE B66	20	67236	2190	2x2	LTE B2	20	900	1960	4x4	LTE B2	20	700	1940	2x2	LTE B13	10	5230	751	2x2	23.25	23.28
CA_[2A]-2A-13A-[66A]-[66A]	LTE B66	5	131997	1712.5	QPSK	1	12	66461	2112.5	4x4	LTE B66	20	67236	2190	4x4	LTE B2	20	900	1960	4x4	LTE B2	20	700	1940	2x2	LTE B13	10	5230	751	2x2	23.15	23.28
CA_[2A]-[2A]-13A-66A-66A	LTE B66	5	131997	1712.5	QPSK	1	12	66461	2112.5	2x2	LTE B66	20	67236	2190	2x2	LTE B2	20	900	1960	4x4	LTE B2	20	700	1940	4x4	LTE B13	10	5230	751	2x2	23.22	23.28
CA_[2A]-[2A]-13A-[66A]-66A	LTE B66	5	131997	1712.5	QPSK	1	12	66461	2112.5	4x4	LTE B66	20	67236	2190	2x2	LTE B2	20	900	1960	4x4	LTE B2	20	700	1940	4x4	LTE B13	10	5230	751	2x2	23.18	23.28
CA_[2A]-[2A]-13A-66A-[66A]	LTE B66	5	131997	1712.5	QPSK	1	12	66461	2112.5	2x2	LTE B66	20	67236	2190	4x4	LTE B2	20	900	1960	4x4	LTE B2	20	700	1940	4x4	LTE B13	10	5230	751	2x2	23.22	23.28
CA_[2A]-[2A]-13A-[66A]-[66A]	LTE B66	5	131997	1712.5	QPSK	1	12	66461	2112.5	4x4	LTE B66	20	67236	2190	4x4	LTE B2	20	900	1960	4x4	LTE B2	20	700	1940	4x4	LTE B13	10	5230	751	2x2	23.22	23.28
CA_2A-2A-13A-[66B]	LTE B66	5	131997	1712.5	QPSK	1	12	66461	2112.5	4x4	LTE B66	15	66554	2121.8	4x4	LTE B2	20	900	1960	2x2	LTE B2	20	700	1940	2x2	LTE B13	10	5230	751	2x2	23.19	23.28
CA_[2A]-2A-13A-66B	LTE B66	5	131997	1712.5	QPSK	1	12	66461	2112.5	2x2	LTE B66	15	66554	2121.8	2x2	LTE B2	20	900	1960	4x4	LTE B2	20	700	1940	2x2	LTE B13	10	5230	751	2x2	23.16	23.28
CA_[2A]-2A-13A-[66B]	LTE B66	5	131997	1712.5	QPSK	1	12	66461	2112.5	4x4	LTE B66	15	66554	2121.8	4x4	LTE B2	20	900	1960	4x4	LTE B2	20	700	1940	2x2	LTE B13	10	5230	751	2x2	23.25	23.28
CA_[2A]-[2A]-13A-66B	LTE B66	5	131997	1712.5	QPSK	1	12	66461	2112.5	2x2	LTE B66	15	66554	2121.8	2x2	LTE B2	20	900	1960	4x4	LTE B2	20	700	1940	4x4	LTE B13	10	5230	751	2x2	23.19	23.28
CA_[2A]-[2A]-13A-[66B]	LTE B66	5	131997	1712.5	QPSK	1	12	66461	2112.5	4x4	LTE B66	15	66554	2121.8	4x4	LTE B2	20	900	1960	4x4	LTE B2	20	700	1940	4x4	LTE B13	10	5230	751	2x2	23.20	23.28
CA_2A-2A-14A-30A-[66A]	LTE B66	5	131997	1712.5	QPSK	1	12	66461	2112.5	4x4	LTE B2	20	900	1960	2x2	LTE B2	20	700	1940	2x2	LTE B14	10	5330	763	2x2	LTE B30	10	9820	2355	2x2	23.24	23.28
CA_2A-2A-14A-[30A]-66A	LTE B66	5	131997	1712.5	QPSK	1	12	66461	2112.5	2x2	LTE B2	20	900	1960	2x2	LTE B2	20	700	1940	2x2	LTE B14	10	5330	763	2x2	LTE B30	10	9820	2355	4x4	23.27	23.28
CA_2A-2A-14A-[30A]-[66A]	LTE B66	5	131997	1712.5	QPSK	1	12	66461	2112.5	4x4	LTE B2	20	900	1960	2x2	LTE B2	20	700	1940	2x2	LTE B14	10	5330	763	2x2	LTE B30	10	9820	2355	4x4	23.30	23.28
CA_[2A]-2A-14A-30A-66A	LTE B66	5	131997	1712.5	QPSK	1	12	66461	2112.5	2x2	LTE B2	20	900	1960	4x4	LTE B2	20	700	1940	2x2	LTE B14	10	5330	763	2x2	LTE B30	10	9820	2355	2x2	23.21	23.28
CA_[2A]-2A-14A-30A-[66A]	LTE B66	5	131997	1712.5	QPSK	1	12	66461	2112.5	4x4	LTE B2	20	900	1960	4x4	LTE B2	20	700	1940	2x2	LTE B14	10	5330	763	2x2	LTE B30	10	9820	2355	2x2	23.25	23.28
CA_[2A]-2A-14A-[30A]-66A	LTE B66	5	131997	1712.5	QPSK	1	12	66461	2112.5	2x2	LTE B2	20	900	1960	4x4	LTE B2	20	700	1940	2x2	LTE B14	10	5330	763	2x2	LTE B30	10	9820	2355	4x4	23.32	23.28
CA_[2A]-2A-14A-[30A]-[66A]	LTE B66	5	131997	1712.5	QPSK	1	12	66461	2112.5	4x4	LTE B2	20	900	1960	4x4	LTE B2	20	700	1940	2x2	LTE B14	10	5330	763	2x2	LTE B30	10	9820	2355	4x4	23.17	23.28
CA_[2A]-[2A]-14A-30A-66A	LTE B66	5	131997	1712.5	QPSK	1	12	66461	2112.5	2x2	LTE B2	20	900	1960	4x4	LTE B2	20	700	1940	4x4	LTE B14	10	5330	763	2x2	LTE B30	10	9820	2355	2x2	23.18	23.28
CA_[2A]-[2A]-14A-30A-[66A]	LTE B66	5	131997	1712.5	QPSK	1	12	66461	2112.5	4x4	LTE B2	20	900	1960	4x4	LTE B2	20	700	1940	4x4	LTE B14	10	5330	763	2x2	LTE B30	10	9820	2355	2x2	23.25	23.28
CA_[2A]-[2A]-14A-[30A]-66A	LTE B66	5	131997	1712.5	QPSK	1	12	66461	2112.5	2x2	LTE B2	20	900	1960	4x4	LTE B2	20	700	1940	4x4	LTE B14	10	5330	763	2x2	LTE B30	10	9820	2355	4x4	23.15	23.28
CA_[2A]-[2A]-14A-[30A]-[66A]	LTE B66	5	131997	1712.5	QPSK	1	12	66461	2112.5	4x4	LTE B2	20	900	1960	4x4	LTE B2	20	700	1940	4x4	LTE B14	10	5330	763	2x2	LTE B30	10	9820	2355	4x4	23.17	23.28
CA_2A-2A-14A-66A-[66A]	LTE B66	5	131997	1712.5	QPSK	1	12	66461	2112.5	2x2	LTE B66	20	67236	2190	4x4	LTE B2	20	900	1960	2x2	LTE B2	20	700	1940	2x2	LTE B14	10	5330	763	2x2	23.20	23.28
CA_2A-2A-14A-[66A]-66A	LTE B66	5	131997	1712.5	QPSK	1	12	66461	2112.5	4x4	LTE B66	20	67236	2190	2x2	LTE B2	20	900	1960	2x2	LTE B2	20	700	1940	2x2	LTE B14	10	5330	763	2x2	23.20	23.28
CA_2A-2A-14A-[66A]-[66A]	LTE B66	5	131997	1712.5	QPSK	1	12	66461	2112.5	4x4	LTE B66	20	67236	2190	4x4	LTE B2	20	900	1960	2x2	LTE B2	20	700	1940	2x2	LTE B14	10	5330	763	2x2	23.21	23.28
CA_[2A]-2A-14A-66A-66A	LTE B66	5	131997	1712.5	QPSK	1	12	66461	2112.5	2x2	LTE B66	20	67236	2190	2x2	LTE B2	20	900	1960	4x4	LTE B2	20	700	1940	2x2	LTE B14	10	5330	763	2x2	23.13	23.28
CA_[2A]-2A-14A-66A-[66A]	LTE B66	5	131997	1712.5	QPSK	1	12	66461	2112.5	2x2	LTE B66	20	67236	2190	4x4	LTE B2	20	900	1960	4x4	LTE B2	20	700	1940	2x2	LTE B14	10	5330	763	2x2	23.19	23.28
CA_[2A]-2A-14A-[66A]-66A	LTE B66	5	131997	1712.5	QPSK	1	12	66461	2112.5	4x4	LTE B66	20	67236	2190	2x2	LTE B2	20	900	1960	4x4	LTE B2	20	700	1940	2x2	LTE B14	10	5330	763	2x2	23.16	23.28
CA_[2A]-2A-14A-[66A]-[66A]	LTE B66	5	131997	1712.5	QPSK	1	12	66461	2112.5	4x4	LTE B66	20	67236	2190	4x4	LTE B2	20	900	1960	4x4	LTE B2	20	700	1940	2x2	LTE B14	10	5330	763	2x2	23.20	23.28
CA_[2A]-[2A]-14A-66A-66A	LTE B66	5	131997	1712.5	QPSK	1	12	66461	2112.5	2x2	LTE B66	20	67236	2190	2x2	LTE B2	20	900	1960	4x4	LTE B2	20	700	1940	4x4	LTE B14	10	5330	763	2x2	23.21	23.28
CA_[2A]-[2A]-14A-[66A]-66A	LTE B66	5	131997	1712.5	QPSK	1	12	66461	2112.5	4x4	LTE B66	20	67236	2190	2x2	LTE B2	20	900	1960	4x4	LTE B2	20	700	1940	4x4	LTE B14	10	5330	763	2x2	23.19	23.28
CA_[2A]-[2A]-14A-66A-[66A]	LTE B66	5	131997	1712.5	QPSK	1	12	66461	2112.5	2x2	LTE B66	20	67236	2190	4x4	LTE B2	20	900	1960	4x4	LTE B2	20	700	1940	4x4	LTE B14	10	5330	763	2x2	23.21	23.28
CA_[2A]-[2A]-14A-[66A]-[66A]	LTE B66	5	131997	1712.5	QPSK	1	12	66461	2112.5	4x4	LTE B66	20	67236	2190	4x4	LTE B2	20	900	1960	4x4	LTE B2	20	700	1940	4x4	LTE B14	10	5330	763	2x2	23.21	23.28
CA_2A-5A-30A-66A-[66A]	LTE B66	5	131997	1712.5	QPSK	1	12	66461	2112.5	2x2	LTE B66	20	67236	2190	4x4	LTE B2	20	900	1960	2x2	LTE B5	10	2525	881.5	2x2	LTE B30	10	9820	2355	2x2	23.20	23.28
CA_2A-5A-30A-[66A]-66A	LTE B66	5	131997	1712.5	QPSK	1	12	66461	2112.5	4x4	LTE B66	20	67236	2190	2x2	LTE B2	20	900	1960	2x2	LTE B5	10	2525	881.5	2x2	LTE B30	10	9820	2355	2x2	23.18	23.28
CA_2A-5A-30A-[66A]-[66A]	LTE B66	5	131997	1712.5	QPSK	1	12	66461	2112.5	4x4	LTE B66	20	67236	2190	4x4	LTE B2	20	900	1960	2x2	LTE B5	10	2525	881.5	2x2	LTE B30	10	9820	2355	2x2	23.21	23.28
CA_2A-5A-[30A]-66A-66A	LTE B66	5	131997	1712.5	QPSK	1	12	66461	2112.5	2x2	LTE B66	20	67236	2190	2x2	LTE B2	20	900	1960	2x2	LTE B5	10	2525	881.5	2x2	LTE B30	10	9820	2355	4x4	23.16	23.28
CA_2A-5A-[30A]-66A-[66A]	LTE B66	5	131997	1712.5	QPSK	1	12	66461	2112.5	2x2	LTE B66	20	67236	2190	4x4	LTE B2	20	900	1960	2x2	LTE B5	10	2525	881.5	2x2	LTE B30	10	9820	2355	4x4	23.19	23.28
CA_2A-5A-[30A]-[66A]-66A	LTE B66	5	131997	1712.5	QPSK	1	12	66461	2112.5	4x4	LTE B66	20	67236	2190	2x2	LTE B2	20	900	1960	2x2	LTE B5	10	2525	881.5	2x2	LTE B30	10	9820	2355	4x4	23.25	23.28
CA_2A-5A-[30A]-[66A]-[66A]	LTE B66	5	131997	1712.5	QPSK	1	12	66461	2112.5	4x4	LTE B66	20	67236	2190	4x4	LTE B2	20	900	1960	2x2	LTE B5	10	2525	881.5	2x2	LTE B30	10	9820	2355	4x4	23.27	23.28
CA_[2A]-5A-30A-66A-66A	LTE B66	5	131997	1712.5	QPSK	1	12	66461	2112.5	2x2	LTE B66	20	67236	2190	2x2	LTE B2	20	900	1960	4x4	LTE B5	10	2525	881.5	2x2	LTE B30	10	9820	2355	2x2	23.21	23.28
CA_[2A]-5A-30A-66A-[66A]	LTE B66	5	131997	1712.5	QPSK	1	12	66461	2112.5	2x2	LTE B66	20	67236	2190	4x4	LTE B2	20	900	1960	4x4	LTE B5	10	2525	881.5	2x2	LTE B30	10	9820	2355	2x2	23.22	23.28
CA_[2A]-5A-30A-[66A]-66A	LTE B66	5	131997	1712.5	QPSK	1	12	66461	2112.5	4x4	LTE B66	20	67236	2190	2x2	LTE B2	20	900	1960	4x4	LTE B5	10	2525	881.5	2x2	LTE B30	10	9820	2355	2x2	23.20	23.28
CA_[2A]-5A-30A-[66A]-[66A]	LTE B66	5	131997	1712.5	QPSK	1	12	66461	2112.5	4x4	LTE B66	20	67236	2190	4x4	LTE B2	20	900	1960	4x4	LTE B5	10	2525	881.5	2x2	LTE B30	10	9820	2355	2x2	23.26	23.28
CA_[2A]-5A-[30A]-66A-66A	LTE B66	5	131997	1712.5	QPSK	1	12	66461	2112.5	2x2	LTE B66	20	67236	2190	2x2	LTE B2	20	900	1960	4x4	LTE B5	10	2525	881.5	2x2	LTE B30	10	9820	2355	4x4	23.28	23.28
CA_[2A]-5A-[30A]-[66A]-66A	LTE B66	5	131997	1712.5	QPSK	1	12	66461	2112.5	4x4	LTE B66	20	67236	2190	2x2	LTE B2	20	900	1960	4x4	LTE B5	10	2525	881.5	2x2	LTE B30	10	9820	2355	4x4	23.24	23.28
CA_[2A]-5A-[30A]-66A-[66A]	LTE B66	5	131997	1712.5	QPSK	1	12	66461	2112.5	2x2	LTE B66	20	67236	2190	4x4	LTE B2	20	900	1960	4x4	LTE B5	10	2525	881.5	2x2	LTE B30	10	9820	2355	4x4	23.20	23.28
CA_[2A]-5A-[30A]-[66A]-[66A]	LTE B66	5	131997	1712.5	QPSK	1	12	66461	2112.5	4x4	LTE B66	20	67236	2190	4x4	LTE B2	20	900	1960	4x4	LTE B5	10	2525	881.5	2x2	LTE B30	10	9820	2355	4x4	23.19	23.28
CA_2A-5B-30A-[66A]	LTE B66	5	131997	1712.5	QPSK	1	12	66461	2112.5	4x4	LTE B2	20	900	1960	2x2	LTE B5	10	2525	881.5	2x2	LTE B5	5	2453	874.3	2x2	LTE B30	10	9820	2355	2x2	23.22	23.28
CA_2A-5B-[30A]-66A	LTE B66	5	131997	1712.5	QPSK	1	12	66461	2112.5	2x2	LTE B2	20	900	1960	2x2	LTE B5	10	2525	881.5	2x2	LTE B5	5	2453	874.3	2x2	LTE B30	10	9820	2355	4x4	23.11	23.28
CA_2A-5B-[30A]-[66A]	LTE B66	5	131997	1712.5	QPSK	1	12	66461	2112.5	4x4	LTE B2	20	900	1960	2x2	LTE B5	10	2525	881.5	2x2	LTE B5	5	2453	874.3	2x2	LTE B30	10	9820	2355	4x4	23.14	23.28
CA_[2A]-5B-30A-66A	LTE B66	5	131997	1712.5	QPSK	1	12	66461	2112.5	2x2	LTE B2	20	900	1960	4x4	LTE B5	10	2525	881.5	2x2	LTE B5	5	2453	874.3	2x2	LTE B30	10	9820	2355	2x2	23.27	23.28
CA_[2A]-5B-30A-[66A]	LTE B66	5	131997	1712.5	QPSK	1	12	66461	2112.5	4x4	LTE B2	20	900	1960	4x4	LTE B5	10	2525	881.5	2x2	LTE B5	5	2453	874.3	2x2	LTE B30	10	9820	2355	2x2	23.23	23.28
CA_[2A]-5B-[30A]-66A	LTE B66	5	131997	1712.5	QPSK	1	12	66461	2112.5	2x2	LTE B2	20	900	1960	4x4	LTE B5	10	2525	881.5	2x2	LTE B5	5	2453	874.3	2x2	LTE B30	10	9820	2355	4x4	23.12	23.28
CA_[2A]-5B-[30A]-[66A]	LTE B66	5	131997	1712.5	QPSK	1	12	66461	2112.5	4x4	LTE B2	20	900	1960	4x4	LTE B5	10	2525	881.5	2x2	LTE B5	5	2453	874.3	2x2	LTE B30	10	9820	2355	4x4	23.16	23.28
CA_2A-5A-46A-[66A]-66A	LTE B66	5	131997	1712.5	QPSK	1	12	66461	2112.5	4x4	LTE B66	20	67236	2190	2x2	LTE B2	20	900	1960	2x2	LTE B5	10	2525	881.5	2x2	LTE B46	20	50665	5537.5	2x2	23.20	23.28
CA_2A-5A-46A-66A-[66A]	LTE B66	5	131997	1712.5	QPSK	1	12	66461	2112.5	2x2	LTE B66	20	67236	2190	4x4	LTE B2	20	900	1960	2x2	LTE B5	10	2525	881.5	2x2	LTE B46	20	50665	5537.5	2x2	23.22	23.28
CA_2A-5A-46A-[66A]-[66A]	LTE B66	5	131997	1712.5	QPSK	1	12	66461	2112.5	4x4	LTE B66	20	67236	2190	4x4	LTE B2	20	900	1960	2x2	LTE B5	10	2525	881.5	2x2	LTE B46	20	50665	5537.5	2x2	23.19	23.28
CA_[2A]-5A-46A-66A-66A	LTE B66	5	131997	1712.5	QPSK	1	12	66461	2112.5	2x2	LTE B66	20	67236	2190	2x2	LTE B2	20	900	1960	4x4	LTE B5	10	2525	881.5	2x2	LTE B46	20	50665	5537.5	2x2	23.24	23.28
CA_[2A]-5A-46A-[66A]-66A	LTE B66	5	131997	1712.5	QPSK	1	12	66461	2112.5	4x4	LTE B66	20	67236	2190	2x2	LTE B2	20	900	1960	4x4	LTE B5	10	2525	881.5	2x2	LTE B46	20	50665	5537.5	2x2	23.22	23.28
CA_[2A]-5A-46A-66A-[66A]	LTE B66	5	131997	1712.5	QPSK	1	12	66461	2112.5	2x2	LTE B66	20	67236	2190	4x4	LTE B2	20	900	1960	4x4	LTE B5	10	2525	881.5	2x2	LTE B46	20	50665	5537.5	2x2	23.25	23.28
CA_[2A]-5A-46A-[66A]-[66A]	LTE B66	5	131997	1712.5	QPSK	1	12	66461	2112.5	4x4	LTE B66	20	67236	2190	4x4	LTE B2	20	900	1960	4x4	LTE B5	10	2525	881.5	2x2	LTE B46	20	50665	5537.5	2x2	23.17	23.28
CA_2A-5A-48A-[66A]-66A	LTE B66	5	131997	1712.5	QPSK	1	12	66461	2112.5	4x4	LTE B66	20	67236	2190	2x2	LTE B2	20	900	1960	2x2	LTE B5	10	2525	881.5	2x2	LTE B48	20	55990	3625	2x2	23.17	23.28
CA_2A-5A-48A-66A-[66A]	LTE B66	5	131997	1712.5	QPSK	1	12	66461	2112.5	2x2	LTE B66	20	67236	2190	4x4	LTE B2	20	900	1960	2x2	LTE B5	10	2525	881.5	2x2	LTE B48	20	55990	3625	2x2	23.16	23.28
CA_2A-5A-48A-[66A]-[66A]	LTE B66	5	131997	1712.5	QPSK	1	12	66461	2112.5	4x4	LTE B66	20	67236	2190	4x4	LTE B2	20	900	1960	2x2	LTE B5	10	2525	881.5	2x2	LTE B48	20	55990	3625	2x2	23.16	23.28
CA_2A-5A-[48A]-66A-66A	LTE B66	5	131997	1712.5	QPSK	1	12	66461	2112.5	2x2	LTE B66	20	67236	2190	2x2	LTE B2	20	900	1960	2x2	LTE B5	10	2525	881.5	2x2	LTE B48	20	55990	3625	4x4	23.25	23.28
CA_2A-5A-[48A]-[66A]-66A	LTE B66	5	131997	1712.5	QPSK	1	12	66461	2112.5	4x4	LTE B66	20	67236	2190	2x2	LTE B2	20	900	1960	2x2	LTE B5	10	2525	881.5	2x2	LTE B48	20	55990	3625	4x4	23.24	23.28
CA_2A-5A-[48A]-66A-[66A]	LTE B66	5	131997	1712.5	QPSK	1	12	66461	2112.5	2x2	LTE B66	20	67236	2190	4x4	LTE B2	20	900	1960	2x2	LTE B5	10	2525	881.5	2x2	LTE B48	20	55990	3625	4x4	23.21	23.28
CA_2A-5A-[48A]-[66A]-[66A]	LTE B66	5	131997	1712.5	QPSK	1	12	66461	2112.5	4x4	LTE B66	20	67236	2190	4x4	LTE B2	20	900	1960	2x2	LTE B5	10	2525	881.5	2x2	LTE B48	20	55990	3625	4x4	23.27	23.28
CA_[2A]-5A-48A-66A-66A	LTE B66	5	131997	1712.5	QPSK	1	12	66461	2112.5	2x2	LTE B66	20	67236	2190	2x2	LTE B2	20	900	1960	4x4	LTE B5	10	2525	881.5	2x2	LTE B48	20	55990	3625	2x2	23.35	23.28
CA_[2A]-5A-48A-[66A]-66A	LTE B66	5	131997	1712.5	QPSK	1	12	66461	2112.5	4x4	LTE B66	20	67236	2190	2x2	LTE B2	20	900	1960	4x4	LTE B5	10	2525	881.5	2x2	LTE B48	20	55990	3625	2x2	23.11	23.28
CA_[2A]-5A-48A-66A-[66A]	LTE B66	5	131997	1712.5	QPSK	1	12	66461	2112.5	2x2	LTE B66	20	67236	2190	4x4	LTE B2	20	900	1960	4x4	LTE B5	10	2525	881.5	2x2	LTE B48	20	55990	3625	2x2	23.24	23.28
CA_[2A]-5A-48A-[66A]-[66A]	LTE B66	5	131997	1712.5	QPSK	1	12	66461	2112.5	4x4	LTE B66	20	67236	2190	4x4	LTE B2	20	900	1960	4x4	LTE B5	10	2525	881.5	2x2	LTE B48	20	55990	3625	2x2	23.26	23.28
CA_[2A]-5A-[48A]-66A-66A	LTE B66	5	131997	1712.5	QPSK	1	12	66461	2112.5	2x2	LTE B66	20	67236	2190	2x2	LTE B2	20	900	1960	4x4	LTE B5	10	2525	881.5	2x2	LTE B48	20	55990	3625	4x4	23.19	23.28
CA_[2A]-5A-[48A]-[66A]-66A	LTE B66	5	131997	1712.5	QPSK	1	12	66461	2112.5	4x4	LTE B66	20	67236	2190	2x2	LTE B2	20	900	1960	4x4	LTE B5	10	2525	881.5	2x2	LTE B48	20	55990	3625	4x4	23.21	23.28
CA_[2A]-5A-[48A]-66A-[66A]	LTE B66	5	131997	1712.5	QPSK	1	12	66461	2112.5	2x2	LTE B66	20	67236	2190	4x4	LTE B2	20	900	1960	4x4	LTE B5	10	2525	881.5	2x2	LTE B48	20	55990	3625	4x4	23.18	23.28
CA_[2A]-5A-[48A]-[66A]-[66A]	LTE B66	5	131997	1712.5	QPSK	1	12	66461	2112.5	4x4	LTE B66	20	67236	2190	4x4	LTE B2	20	900	1960	4x4	LTE B5	10	2525	881.5	2x2	LTE B48	20	55990	3625	4x4	23.25	23.28
CA_2A-5A-48C-[66A]	LTE B66	5	131997	1712.5	QPSK	1	12	66461	2112.5	4x4	LTE B2	20	900	1960	2x2	LTE B5	10	2525	881.5	2x2	LTE B48	20	55990	3625	2x2	LTE B48	20	56188	3644.8	2x2	23.20	23.28
CA_2A-5A-[48C]-66A	LTE B66	5	131997	1712.5	QPSK	1	12	66461	2112.5	2x2	LTE B2	20	900	1960	2x2	LTE B5	10	2525	881.5	2x2	LTE B48	20	55990	3625	4x4	LTE B48	20	56188	3644.8	4x4	23.17	23.28
CA_2A-5A-[48C]-[66A]	LTE B66	5	131997	1712.5	QPSK	1	12	66461	2112.5	4x4	LTE B2	20	900	1960	2x2	LTE B5	10	2525	881.5	2x2	LTE B48	20	55990	3625	4x4	LTE B48	20	56188	3644.8	4x4	23.21	23.28
CA_[2A]-5A-48C-66A	LTE B66	5	131997	1712.5	QPSK	1	12	66461	2112.5	2x2	LTE B2	20	900	1960	4x4	LTE B5	10	2525	881.5	2x2	LTE B48	20	55990	3625	2x2	LTE B48	20	56188	3644.8	2x2	23.16	23.28
CA_[2A]-5A-48C-[66A]	LTE B66	5	131997	1712.5	QPSK	1	12	66461	2112.5	4x4	LTE B2	20	900	1960	4x4	LTE B5	10	2525	881.5	2x2	LTE B48	20	55990	3625	2x2	LTE B48	20	56188	3644.8	2x2	23.13	23.28
CA_[2A]-5A-[48C]-66A	LTE B66	5	131997	1712.5	QPSK	1	12	66461	2112.5	2x2	LTE B2	20	900	1960	4x4	LTE B5	10	2525	881.5	2x2	LTE B48	20	55990	3625	4x4	LTE B48	20	56188	3644.8	4x4	23.13	23.28
CA_[2A]-5A-[48C]-[66A]	LTE B66	5	131997	1712.5	QPSK	1	12	66461	2112.5	4x4	LTE B2	20	900	1960	4x4	LTE B5	10	2525	881.5	2x2	LTE B48	20	55990	3625	4x4	LTE B48	20	56188	3644.8	4x4	23.07	23.28
CA_2A-5B-66A-[66A]	LTE B66	5	131997	1712.5	QPSK	1	12	66461	2112.5	2x2	LTE B66	20	67236	2190	4x4	LTE B2	20	900	1960	2x2	LTE B5	10	2525	881.5	2x2	LTE B5	5	2453	874.3	2x2	23.21	23.28
CA_2A-5B-[66A]-66A	LTE B66	5	131997	1712.5	QPSK	1	12	66461	2112.5	4x4	LTE B66	20	67236	2190	2x2	LTE B2	20	900	1960	2x2	LTE B5	10	2525	881.5	2x2	LTE B5	5	2453	874.3	2x2	23.17	23.28
CA_2A-5B-[66A]-[66A]	LTE B66	5	131997	1712.5	QPSK	1	12	66461	2112.5	4x4	LTE B66	20	67236	2190	4x4	LTE B2	20	900	1960	2x2	LTE B5	10	2525	881.5	2x2	LTE B5	5	2453	874.3	2x2	23.32	23.28
CA_[2A]-5B-66A-66A	LTE B66	5	131997	1712.5	QPSK	1	12	66461	2112.5	2x2	LTE B66	20	67236	2190	2x2	LTE B2	20	900	1960	4x4	LTE B5	10	2525	881.5	2x2	LTE B5	5	2453	874.3	2x2	23.21	23.28
CA_[2A]-5B-66A-[66A]	LTE B66	5	131997	1712.5	QPSK	1	12	66461	2112.5	2x2	LTE B66	20	67236	2190	4x4	LTE B2	20	900	1960	4x4	LTE B5	10	2525	881.5	2x2	LTE B5	5	2453	874.3	2x2	23.18	23.28
CA_[2A]-5B-[66A]-66A	LTE B66	5	131997	1712.5	QPSK	1	12	66461	2112.5	4x4	LTE B66	20	67236	2190	2x2	LTE B2	20	900	1960	4x4	LTE B5	10	2525	881.5	2x2	LTE B5	5	2453	874.3	2x2	23.22	23.28
CA_[2A]-5B-[66A]-[66A]	LTE B66	5	131997	1712.5	QPSK	1	12	66461	2112.5	4x4	LTE B66	20	67236	2190	4x4	LTE B2	20	900	1960	4x4	LTE B5	10	2525	881.5	2x2	LTE B5	5	2453	874.3	2x2	23.20	23.28
CA_2A-5B-[66B]	LTE B66	5	131997	1712.5	QPSK	1	12	66461	2112.5	4x4	LTE B66	15	66554	2121.8	4x4	LTE B2	20	900	1960	2x2	LTE B5	10	2525	881.5	2x2	LTE B5	5	2453	874.3	2x2	23.21	23.28
CA_[2A]-5B-66B	LTE B66	5	131997	1712.5	QPSK	1	12	66461	2112.5	2x2	LTE B66	15	66554	2121.8	2x2	LTE B2	20	900	1960	4x4	LTE B5	10	2525	881.5	2x2	LTE B5	5	2453	874.3	2x2	23.16	23.28

© 2021 PCTEST

Table J-21
Maximum Output Powers

	PCC										SCC 1					SCC 2					SCC 3					SCC 4					Power	
Combination	PCC Band	PCC BW [MHz]	PCC (UL) Ch.	PCC (UL) Freq. [MHz]	Mod.	PCC UL# RB	PCC UL RB Offset	PCC (DL) Ch.	PCC (DL) Freq. [MHz]	DL Ant. Config.	SCC Band	SCC BW [MHz]	SCC (DL) Ch.	SCC (DL) Freq. [MHz]	DL Ant. Config.	SCC Band	SCC BW [MHz]	SCC (DL) Ch.	SCC (DL) Freq. [MHz]	DL Ant. Config.	SCC Band	SCC BW [MHz]	SCC (DL) Ch.	SCC (DL) Freq. [MHz]	DL Ant. Config.	SCC Band	SCC BW [MHz]	SCC (DL) Ch.	SCC (DL) Freq. [MHz]	DL Ant. Config.	LTE Tx.Power with DL CA Enabled	LTE Single Carrier Tx Power (dBm)
CA_[2A]-5B-[66B]	LTE B66	5	131997	1712.5	QPSK	1	12	66461	2112.5	4x4	LTE B66	15	66554	2121.8	4x4	LTE B2	20	900	1960	4x4	LTE B5	10	2525	881.5	2x2	LTE B5	5	2453	874.3	2x2	23.19	23.28
CA_2A-5B-[66C]	LTE B66	5	131997	1712.5	QPSK	1	12	66461	2112.5	4x4	LTE B66	20	66578	2124.2	4x4	LTE B2	20	900	1960	2x2	LTE B5	10	2525	881.5	2x2	LTE B5	5	2453	874.3	2x2	23.23	23.28
CA_[2A]-5B-66C	LTE B66	5	131997	1712.5	QPSK	1	12	66461	2112.5	2x2	LTE B66	20	66578	2124.2	2x2	LTE B2	20	900	1960	4x4	LTE B5	10	2525	881.5	2x2	LTE B5	5	2453	874.3	2x2	23.21	23.28
CA_[2A]-5B-[66C]	LTE B66	5	131997	1712.5	QPSK	1	12	66461	2112.5	4x4	LTE B66	20	66578	2124.2	4x4	LTE B2	20	900	1960	4x4	LTE B5	10	2525	881.5	2x2	LTE B5	5	2453	874.3	2x2	23.22	23.28
CA_2A-12A-30A-66A-[66A]	LTE B66	5	131997	1712.5	QPSK	1	12	66461	2112.5	2x2	LTE B66	20	67236	2190	4x4	LTE B2	20	900	1960	2x2	LTE B12	10	5095	737.5	2x2	LTE B30	10	9820	2355	2x2	23.09	23.28
CA_2A-12A-30A-[66A]-66A	LTE B66	5	131997	1712.5	QPSK	1	12	66461	2112.5	4x4	LTE B66	20	67236	2190	2x2	LTE B2	20	900	1960	2x2	LTE B12	10	5095	737.5	2x2	LTE B30	10	9820	2355	2x2	23.14	23.28
CA_2A-12A-30A-[66A]-[66A]	LTE B66	5	131997	1712.5	QPSK	1	12	66461	2112.5	4x4	LTE B66	20	67236	2190	4x4	LTE B2	20	900	1960	2x2	LTE B12	10	5095	737.5	2x2	LTE B30	10	9820	2355	2x2	23.28	23.28
CA_2A-12A-[30A]-66A-66A	LTE B66	5	131997	1712.5	QPSK	1	12	66461	2112.5	2x2	LTE B66	20	67236	2190	2x2	LTE B2	20	900	1960	2x2	LTE B12	10	5095	737.5	2x2	LTE B30	10	9820	2355	4x4	23.11	23.28
CA_2A-12A-[30A]-66A-[66A]	LTE B66	5	131997	1712.5	QPSK	1	12	66461	2112.5	2x2	LTE B66	20	67236	2190	4x4	LTE B2	20	900	1960	2x2	LTE B12	10	5095	737.5	2x2	LTE B30	10	9820	2355	4x4	23.32	23.28
CA_2A-12A-[30A]-[66A]-66A	LTE B66	5	131997	1712.5	QPSK	1	12	66461	2112.5	4x4	LTE B66	20	67236	2190	2x2	LTE B2	20	900	1960	2x2	LTE B12	10	5095	737.5	2x2	LTE B30	10	9820	2355	4x4	23.12	23.28
CA_2A-12A-[30A]-[66A]-[66A]	LTE B66	5	131997	1712.5	QPSK	1	12	66461	2112.5	4x4	LTE B66	20	67236	2190	4x4	LTE B2	20	900	1960	2x2	LTE B12	10	5095	737.5	2x2	LTE B30	10	9820	2355	4x4	23.17	23.28
CA_[2A]-12A-30A-66A-66A	LTE B66	5	131997	1712.5	QPSK	1	12	66461	2112.5	2x2	LTE B66	20	67236	2190	2x2	LTE B2	20	900	1960	4x4	LTE B12	10	5095	737.5	2x2	LTE B30	10	9820	2355	2x2	23.20	23.28
CA_[2A]-12A-30A-66A-[66A]	LTE B66	5	131997	1712.5	QPSK	1	12	66461	2112.5	2x2	LTE B66	20	67236	2190	4x4	LTE B2	20	900	1960	4x4	LTE B12	10	5095	737.5	2x2	LTE B30	10	9820	2355	2x2	23.04	23.28
CA_[2A]-12A-30A-[66A]-66A	LTE B66	5	131997	1712.5	QPSK	1	12	66461	2112.5	4x4	LTE B66	20	67236	2190	2x2	LTE B2	20	900	1960	4x4	LTE B12	10	5095	737.5	2x2	LTE B30	10	9820	2355	2x2	23.28	23.28
CA_[2A]-12A-30A-[66A]-[66A]	LTE B66	5	131997	1712.5	QPSK	1	12	66461	2112.5	4x4	LTE B66	20	67236	2190	4x4	LTE B2	20	900	1960	4x4	LTE B12	10	5095	737.5	2x2	LTE B30	10	9820	2355	2x2	23.20	23.28
CA_[2A]-12A-[30A]-66A-66A	LTE B66	5	131997	1712.5	QPSK	1	12	66461	2112.5	2x2	LTE B66	20	67236	2190	2x2	LTE B2	20	900	1960	4x4	LTE B12	10	5095	737.5	2x2	LTE B30	10	9820	2355	4x4	23.16	23.28
CA_[2A]-12A-[30A]-[66A]-66A	LTE B66	5	131997	1712.5	QPSK	1	12	66461	2112.5	4x4	LTE B66	20	67236	2190	2x2	LTE B2	20	900	1960	4x4	LTE B12	10	5095	737.5	2x2	LTE B30	10	9820	2355	4x4	23.07	23.28
CA_[2A]-12A-[30A]-66A-[66A]	LTE B66	5	131997	1712.5	QPSK	1	12	66461	2112.5	2x2	LTE B66	20	67236	2190	4x4	LTE B2	20	900	1960	4x4	LTE B12	10	5095	737.5	2x2	LTE B30	10	9820	2355	4x4	23.17	23.28
CA_[2A]-12A-[30A]-[66A]-[66A]	LTE B66	5	131997	1712.5	QPSK	1	12	66461	2112.5	4x4	LTE B66	20	67236	2190	4x4	LTE B2	20	900	1960	4x4	LTE B12	10	5095	737.5	2x2	LTE B30	10	9820	2355	4x4	23.16	23.28
CA_2A-12B-[66A]-66A	LTE B66	5	131997	1712.5	QPSK	1	12	66461	2112.5	4x4	LTE B66	20	67236	2190	2x2	LTE B2	20	900	1960	2x2	LTE B12	5	5095	737.5	2x2	LTE B12	5	5047	732.7	2x2	23.20	23.28
CA_2A-12B-66A-[66A]	LTE B66	5	131997	1712.5	QPSK	1	12	66461	2112.5	2x2	LTE B66	20	67236	2190	4x4	LTE B2	20	900	1960	2x2	LTE B12	5	5095	737.5	2x2	LTE B12	5	5047	732.7	2x2	23.16	23.28
CA_2A-12B-[66A]-[66A]	LTE B66	5	131997	1712.5	QPSK	1	12	66461	2112.5	4x4	LTE B66	20	67236	2190	4x4	LTE B2	20	900	1960	2x2	LTE B12	5	5095	737.5	2x2	LTE B12	5	5047	732.7	2x2	23.24	23.28
CA_[2A]-12B-66A-66A	LTE B66	5	131997	1712.5	QPSK	1	12	66461	2112.5	2x2	LTE B66	20	67236	2190	2x2	LTE B2	20	900	1960	4x4	LTE B12	5	5095	737.5	2x2	LTE B12	5	5047	732.7	2x2	23.21	23.28
CA_[2A]-12B-[66A]-66A	LTE B66	5	131997	1712.5	QPSK	1	12	66461	2112.5	4x4	LTE B66	20	67236	2190	2x2	LTE B2	20	900	1960	4x4	LTE B12	5	5095	737.5	2x2	LTE B12	5	5047	732.7	2x2	23.32	23.28
CA_[2A]-12B-66A-[66A]	LTE B66	5	131997	1712.5	QPSK	1	12	66461	2112.5	2x2	LTE B66	20	67236	2190	4x4	LTE B2	20	900	1960	4x4	LTE B12	5	5095	737.5	2x2	LTE B12	5	5047	732.7	2x2	23.17	23.28
CA_[2A]-12B-[66A]-[66A]	LTE B66	5	131997	1712.5	QPSK	1	12	66461	2112.5	4x4	LTE B66	20	67236	2190	4x4	LTE B2	20	900	1960	4x4	LTE B12	5	5095	737.5	2x2	LTE B12	5	5047	732.7	2x2	23.21	23.28
CA_2A-13A-46A-[66A]-66A	LTE B66	5	131997	1712.5	QPSK	1	12	66461	2112.5	4x4	LTE B66	20	67236	2190	2x2	LTE B2	20	900	1960	2x2	LTE B13	10	5230	751	2x2	LTE B46	20	50665	5537.5	2x2	23.18	23.28
CA_2A-13A-46A-66A-[66A]	LTE B66	5	131997	1712.5	QPSK	1	12	66461	2112.5	2x2	LTE B66	20	67236	2190	4x4	LTE B2	20	900	1960	2x2	LTE B13	10	5230	751	2x2	LTE B46	20	50665	5537.5	2x2	23.22	23.28
CA_2A-13A-46A-[66A]-[66A]	LTE B66	5	131997	1712.5	QPSK	1	12	66461	2112.5	4x4	LTE B66	20	67236	2190	4x4	LTE B2	20	900	1960	2x2	LTE B13	10	5230	751	2x2	LTE B46	20	50665	5537.5	2x2	23.20	23.28
CA_[2A]-13A-46A-66A-66A	LTE B66	5	131997	1712.5	QPSK	1	12	66461	2112.5	2x2	LTE B66	20	67236	2190	2x2	LTE B2	20	900	1960	4x4	LTE B13	10	5230	751	2x2	LTE B46	20	50665	5537.5	2x2	23.21	23.28
CA_[2A]-13A-46A-[66A]-66A	LTE B66	5	131997	1712.5	QPSK	1	12	66461	2112.5	4x4	LTE B66	20	67236	2190	2x2	LTE B2	20	900	1960	4x4	LTE B13	10	5230	751	2x2	LTE B46	20	50665	5537.5	2x2	23.16	23.28
CA_[2A]-13A-46A-66A-[66A]	LTE B66	5	131997	1712.5	QPSK	1	12	66461	2112.5	2x2	LTE B66	20	67236	2190	4x4	LTE B2	20	900	1960	4x4	LTE B13	10	5230	751	2x2	LTE B46	20	50665	5537.5	2x2	23.19	23.28
CA_[2A]-13A-46A-[66A]-[66A]	LTE B66	5	131997	1712.5	QPSK	1	12	66461	2112.5	4x4	LTE B66	20	67236	2190	4x4	LTE B2	20	900	1960	4x4	LTE B13	10	5230	751	2x2	LTE B46	20	50665	5537.5	2x2	23.14	23.28
CA_2A-13A-48A-48A-[66A]	LTE B66	5	131997	1712.5	QPSK	1	12	66461	2112.5	4x4	LTE B2	20	900	1960	2x2	LTE B13	10	5230	751	2x2	LTE B48	20	55990	3625	2x2	LTE B48	20	55340	3560	2x2	23.24	23.28
CA_2A-13A-[48A]-48A-66A	LTE B66	5	131997	1712.5	QPSK	1	12	66461	2112.5	2x2	LTE B2	20	900	1960	2x2	LTE B13	10	5230	751	2x2	LTE B48	20	55990	3625	4x4	LTE B48	20	55340	3560	2x2	23.22	23.28
CA_2A-13A-[48A]-48A-[66A]	LTE B66	5	131997	1712.5	QPSK	1	12	66461	2112.5	4x4	LTE B2	20	900	1960	2x2	LTE B13	10	5230	751	2x2	LTE B48	20	55990	3625	4x4	LTE B48	20	55340	3560	2x2	23.21	23.28
CA_2A-13A-[48A]-[48A]-66A	LTE B66	5	131997	1712.5	QPSK	1	12	66461	2112.5	2x2	LTE B2	20	900	1960	2x2	LTE B13	10	5230	751	2x2	LTE B48	20	55990	3625	4x4	LTE B48	20	55340	3560	4x4	23.18	23.28
CA_2A-13A-[48A]-[48A]-[66A]	LTE B66	5	131997	1712.5	QPSK	1	12	66461	2112.5	4x4	LTE B2	20	900	1960	2x2	LTE B13	10	5230	751	2x2	LTE B48	20	55990	3625	4x4	LTE B48	20	55340	3560	4x4	23.08	23.28
CA_[2A]-13A-48A-48A-66A	LTE B66	5	131997	1712.5	QPSK	1	12	66461	2112.5	2x2	LTE B2	20	900	1960	4x4	LTE B13	10	5230	751	2x2	LTE B48	20	55990	3625	2x2	LTE B48	20	55340	3560	2x2	23.21	23.28
CA_[2A]-13A-48A-48A-[66A]	LTE B66	5	131997	1712.5	QPSK	1	12	66461	2112.5	4x4	LTE B2	20	900	1960	4x4	LTE B13	10	5230	751	2x2	LTE B48	20	55990	3625	2x2	LTE B48	20	55340	3560	2x2	23.12	23.28
CA_[2A]-13A-[48A]-48A-66A	LTE B66	5	131997	1712.5	QPSK	1	12	66461	2112.5	2x2	LTE B2	20	900	1960	4x4	LTE B13	10	5230	751	2x2	LTE B48	20	55990	3625	4x4	LTE B48	20	55340	3560	2x2	23.19	23.28
CA_[2A]-13A-[48A]-48A-[66A]	LTE B66	5	131997	1712.5	QPSK	1	12	66461	2112.5	4x4	LTE B2	20	900	1960	4x4	LTE B13	10	5230	751	2x2	LTE B48	20	55990	3625	4x4	LTE B48	20	55340	3560	2x2	23.16	23.28
CA_[2A]-13A-[48A]-[48A]-66A	LTE B66	5	131997	1712.5	QPSK	1	12	66461	2112.5	2x2	LTE B2	20	900	1960	4x4	LTE B13	10	5230	751	2x2	LTE B48	20	55990	3625	4x4	LTE B48	20	55340	3560	4x4	23.26	23.28
CA_[2A]-13A-[48A]-[48A]-[66A]	LTE B66	5	131997	1712.5	QPSK	1	12	66461	2112.5	4x4	LTE B2	20	900	1960	4x4	LTE B13	10	5230	751	2x2	LTE B48	20	55990	3625	4x4	LTE B48	20	55340	3560	4x4	23.19	23.28
CA_2A-13A-48C-[66A]	LTE B66	5	131997	1712.5	QPSK	1	12	66461	2112.5	4x4	LTE B2	20	900	1960	2x2	LTE B13	10	5230	751	2x2	LTE B48	20	55990	3625	2x2	LTE B48	20	56188	3644.8	2x2	23.18	23.28
CA_2A-13A-[48C]-66A	LTE B66	5	131997	1712.5	QPSK	1	12	66461	2112.5	2x2	LTE B2	20	900	1960	2x2	LTE B13	10	5230	751	2x2	LTE B48	20	55990	3625	4x4	LTE B48	20	56188	3644.8	4x4	23.21	23.28
CA_2A-13A-[48C]-[66A]	LTE B66	5	131997	1712.5	QPSK	1	12	66461	2112.5	4x4	LTE B2	20	900	1960	2x2	LTE B13	10	5230	751	2x2	LTE B48	20	55990	3625	4x4	LTE B48	20	56188	3644.8	4x4	23.20	23.28
CA_[2A]-13A-48C-66A	LTE B66	5	131997	1712.5	QPSK	1	12	66461	2112.5	2x2	LTE B2	20	900	1960	4x4	LTE B13	10	5230	751	2x2	LTE B48	20	55990	3625	2x2	LTE B48	20	56188	3644.8	2x2	23.24	23.28
CA_[2A]-13A-48C-[66A]	LTE B66	5	131997	1712.5	QPSK	1	12	66461	2112.5	4x4	LTE B2	20	900	1960	4x4	LTE B13	10	5230	751	2x2	LTE B48	20	55990	3625	2x2	LTE B48	20	56188	3644.8	2x2	23.21	23.28
CA_[2A]-13A-[48C]-66A	LTE B66	5	131997	1712.5	QPSK	1	12	66461	2112.5	2x2	LTE B2	20	900	1960	4x4	LTE B13	10	5230	751	2x2	LTE B48	20	55990	3625	4x4	LTE B48	20	56188	3644.8	4x4	23.17	23.28
CA_[2A]-13A-[48C]-[66A]	LTE B66	5	131997	1712.5	QPSK	1	12	66461	2112.5	4x4	LTE B2	20	900	1960	4x4	LTE B13	10	5230	751	2x2	LTE B48	20	55990	3625	4x4	LTE B48	20	56188	3644.8	4x4	23.25	23.28
CA_2A-13A-66A-[66B]	LTE B66	5	131997	1712.5	QPSK	1	12	66461	2112.5	2x2	LTE B66	5	67168	2183.2	4x4	LTE B66	15	67261	2192.5	4x4	LTE B2	20	900	1960	2x2	LTE B13	10	5230	751	2x2	23.29	23.28
CA_2A-13A-[66B]-66A	LTE B66	5	131997	1712.5	QPSK	1	12	66461	2112.5	4x4	LTE B66	15	66554	2121.8	4x4	LTE B66	20	67236	2190	2x2	LTE B2	20	900	1960	2x2	LTE B13	10	5230	751	2x2	23.20	23.28
CA_2A-13A-[66A]-66B	LTE B66	5	131997	1712.5	QPSK	1	12	66461	2112.5	4x4	LTE B66	5	67168	2183.2	2x2	LTE B66	15	67261	2192.5	2x2	LTE B2	20	900	1960	2x2	LTE B13	10	5230	751	2x2	23.22	23.28
CA_2A-13A-66B-[66A]	LTE B66	5	131997	1712.5	QPSK	1	12	66461	2112.5	2x2	LTE B66	15	66554	2121.8	2x2	LTE B66	20	67236	2190	4x4	LTE B2	20	900	1960	2x2	LTE B13	10	5230	751	2x2	23.30	23.28
CA_2A-13A-[66A]-[66B]	LTE B66	5	131997	1712.5	QPSK	1	12	66461	2112.5	4x4	LTE B66	5	67168	2183.2	4x4	LTE B66	15	67261	2192.5	4x4	LTE B2	20	900	1960	2x2	LTE B13	10	5230	751	2x2	23.25	23.28
CA_2A-13A-[66B]-[66A]	LTE B66	5	131997	1712.5	QPSK	1	12	66461	2112.5	4x4	LTE B66	15	66554	2121.8	4x4	LTE B66	20	67236	2190	4x4	LTE B2	20	900	1960	2x2	LTE B13	10	5230	751	2x2	23.33	23.28
CA_[2A]-13A-66A-66B	LTE B66	5	131997	1712.5	QPSK	1	12	66461	2112.5	2x2	LTE B66	5	67168	2183.2	2x2	LTE B66	15	67261	2192.5	2x2	LTE B2	20	900	1960	4x4	LTE B13	10	5230	751	2x2	23.22	23.28
CA_[2A]-13A-66B-66A	LTE B66	5	131997	1712.5	QPSK	1	12	66461	2112.5	2x2	LTE B66	15	66554	2121.8	2x2	LTE B66	20	67236	2190	2x2	LTE B2	20	900	1960	4x4	LTE B13	10	5230	751	2x2	23.25	23.28
CA_[2A]-13A-66A-[66B]	LTE B66	5	131997	1712.5	QPSK	1	12	66461	2112.5	2x2	LTE B66	5	67168	2183.2	4x4	LTE B66	15	67261	2192.5	4x4	LTE B2	20	900	1960	4x4	LTE B13	10	5230	751	2x2	23.33	23.28
CA_[2A]-13A-[66B]-66A	LTE B66	5	131997	1712.5	QPSK	1	12	66461	2112.5	4x4	LTE B66	15	66554	2121.8	4x4	LTE B66	20	67236	2190	2x2	LTE B2	20	900	1960	4x4	LTE B13	10	5230	751	2x2	23.31	23.28
CA_[2A]-13A-[66A]-66B	LTE B66	5	131997	1712.5	QPSK	1	12	66461	2112.5	4x4	LTE B66	5	67168	2183.2	2x2	LTE B66	15	67261	2192.5	2x2	LTE B2	20	900	1960	4x4	LTE B13	10	5230	751	2x2	23.32	23.28
CA_[2A]-13A-66B-[66A]	LTE B66	5	131997	1712.5	QPSK	1	12	66461	2112.5	2x2	LTE B66	15	66554	2121.8	2x2	LTE B66	20	67236	2190	4x4	LTE B2	20	900	1960	4x4	LTE B13	10	5230	751	2x2	23.34	23.28
CA_[2A]-13A-[66A]-[66B]	LTE B66	5	131997	1712.5	QPSK	1	12	66461	2112.5	4x4	LTE B66	5	67168	2183.2	4x4	LTE B66	15	67261	2192.5	4x4	LTE B2	20	900	1960	4x4	LTE B13	10	5230	751	2x2	23.20	23.28
CA_[2A]-13A-[66B]-[66A]	LTE B66	5	131997	1712.5	QPSK	1	12	66461	2112.5	4x4	LTE B66	15	66554	2121.8	4x4	LTE B66	20	67236	2190	4x4	LTE B2	20	900	1960	4x4	LTE B13	10	5230	751	2x2	23.26	23.28
CA_2A-14A-30A-66A-[66A]	LTE B66	5	131997	1712.5	QPSK	1	12	66461	2112.5	2x2	LTE B66	20	67236	2190	4x4	LTE B2	20	900	1960	2x2	LTE B14	10	5330	763	2x2	LTE B30	10	9820	2355	2x2	23.20	23.28
CA_2A-14A-30A-[66A]-66A	LTE B66	5	131997	1712.5	QPSK	1	12	66461	2112.5	4x4	LTE B66	20	67236	2190	2x2	LTE B2	20	900	1960	2x2	LTE B14	10	5330	763	2x2	LTE B30	10	9820	2355	2x2	23.28	23.28
CA_2A-14A-30A-[66A]-[66A]	LTE B66	5	131997	1712.5	QPSK	1	12	66461	2112.5	4x4	LTE B66	20	67236	2190	4x4	LTE B2	20	900	1960	2x2	LTE B14	10	5330	763	2x2	LTE B30	10	9820	2355	2x2	23.17	23.28
CA_2A-14A-[30A]-66A-66A	LTE B66	5	131997	1712.5	QPSK	1	12	66461	2112.5	2x2	LTE B66	20	67236	2190	2x2	LTE B2	20	900	1960	2x2	LTE B14	10	5330	763	2x2	LTE B30	10	9820	2355	4x4	23.24	23.28
CA_2A-14A-[30A]-66A-[66A]	LTE B66	5	131997	1712.5	QPSK	1	12	66461	2112.5	2x2	LTE B66	20	67236	2190	4x4	LTE B2	20	900	1960	2x2	LTE B14	10	5330	763	2x2	LTE B30	10	9820	2355	4x4	23.28	23.28
CA_2A-14A-[30A]-[66A]-66A	LTE B66	5	131997	1712.5	QPSK	1	12	66461	2112.5	4x4	LTE B66	20	67236	2190	2x2	LTE B2	20	900	1960	2x2	LTE B14	10	5330	763	2x2	LTE B30	10	9820	2355	4x4	23.19	23.28
CA_2A-14A-[30A]-[66A]-[66A]	LTE B66	5	131997	1712.5	QPSK	1	12	66461	2112.5	4x4	LTE B66	20	67236	2190	4x4	LTE B2	20	900	1960	2x2	LTE B14	10	5330	763	2x2	LTE B30	10	9820	2355	4x4	23.21	23.28
CA_[2A]-14A-30A-66A-66A	LTE B66	5	131997	1712.5	QPSK	1	12	66461	2112.5	2x2	LTE B66	20	67236	2190	2x2	LTE B2	20	900	1960	4x4	LTE B14	10	5330	763	2x2	LTE B30	10	9820	2355	2x2	23.33	23.28
CA_[2A]-14A-30A-66A-[66A]	LTE B66	5	131997	1712.5	QPSK	1	12	66461	2112.5	2x2	LTE B66	20	67236	2190	4x4	LTE B2	20	900	1960	4x4	LTE B14	10	5330	763	2x2	LTE B30	10	9820	2355	2x2	23.32	23.28
CA_[2A]-14A-30A-[66A]-66A	LTE B66	5	131997	1712.5	QPSK	1	12	66461	2112.5	4x4	LTE B66	20	67236	2190	2x2	LTE B2	20	900	1960	4x4	LTE B14	10	5330	763	2x2	LTE B30	10	9820	2355	2x2	23.17	23.28
CA_[2A]-14A-30A-[66A]-[66A]	LTE B66	5	131997	1712.5	QPSK	1	12	66461	2112.5	4x4	LTE B66	20	67236	2190	4x4	LTE B2	20	900	1960	4x4	LTE B14	10	5330	763	2x2	LTE B30	10	9820	2355	2x2	23.22	23.28
CA_[2A]-14A-[30A]-66A-66A	LTE B66	5	131997	1712.5	QPSK	1	12	66461	2112.5	2x2	LTE B66	20	67236	2190	2x2	LTE B2	20	900	1960	4x4	LTE B14	10	5330	763	2x2	LTE B30	10	9820	2355	4x4	23.27	23.28
CA_[2A]-14A-[30A]-[66A]-66A	LTE B66	5	131997	1712.5	QPSK	1	12	66461	2112.5	4x4	LTE B66	20	67236	2190	2x2	LTE B2	20	900	1960	4x4	LTE B14	10	5330	763	2x2	LTE B30	10	9820	2355	4x4	23.25	23.28
CA_[2A]-14A-[30A]-66A-[66A]	LTE B66	5	131997	1712.5	QPSK	1	12	66461	2112.5	2x2	LTE B66	20	67236	2190	4x4	LTE B2	20	900	1960	4x4	LTE B14	10	5330	763	2x2	LTE B30	10	9820	2355	4x4	23.31	23.28
CA_[2A]-14A-[30A]-[66A]-[66A]	LTE B66	5	131997	1712.5	QPSK	1	12	66461	2112.5	4x4	LTE B66	20	67236	2190	4x4	LTE B2	20	900	1960	4x4	LTE B14	10	5330	763	2x2	LTE B30	10	9820	2355	4x4	23.21	23.28
CA_2A-46A-46C-[66A]	LTE B66	5	131997	1712.5	QPSK	1	12	66461	2112.5	4x4	LTE B2	20	900	1960	2x2	LTE B46	20	50665	5537.5	2x2	LTE B46	20	50467	5517.7	2x2	LTE B46	20	53540	5825	2x2	23.32	23.28
CA_[2A]-46A-46C-66A	LTE B66	5	131997	1712.5	QPSK	1	12	66461	2112.5	2x2	LTE B2	20	900	1960	4x4	LTE B46	20	50665	5537.5	2x2	LTE B46	20	50467	5517.7	2x2	LTE B46	20	53540	5825	2x2	23.26	23.28
CA_[2A]-46A-46C-[66A]	LTE B66	5	131997	1712.5	QPSK	1	12	66461	2112.5	4x4	LTE B2	20	900	1960	4x4	LTE B46	20	50665	5537.5	2x2	LTE B46	20	50467	5517.7	2x2	LTE B46	20	53540	5825	2x2	23.21	23.28
CA_2A-46A-48C-[66A]	LTE B66	5	131997	1712.5	QPSK	1	12	66461	2112.5	4x4	LTE B2	20	900	1960	2x2	LTE B46	20	50665	5537.5	2x2	LTE B48	20	55990	3625	2x2	LTE B48	20	56188	3644.8	2x2	23.22	23.28
CA_2A-46A-[48C]-66A	LTE B66	5	131997	1712.5	QPSK	1	12	66461	2112.5	2x2	LTE B2	20	900	1960	2x2	LTE B46	20	50665	5537.5	2x2	LTE B48	20	55990	3625	4x4	LTE B48	20	56188	3644.8	4x4	23.16	23.28
CA_2A-46A-[48C]-[66A]	LTE B66	5	131997	1712.5	QPSK	1	12	66461	2112.5	4x4	LTE B2	20	900	1960	2x2	LTE B46	20	50665	5537.5	2x2	LTE B48	20	55990	3625	4x4	LTE B48	20	56188	3644.8	4x4	23.25	23.28
CA_[2A]-46A-48C-66A	LTE B66	5	131997	1712.5	QPSK	1	12	66461	2112.5	2x2	LTE B2	20	900	1960	4x4	LTE B46	20	50665	5537.5	2x2	LTE B48	20	55990	3625	2x2	LTE B48	20	56188	3644.8	2x2	23.12	23.28
CA_[2A]-46A-48C-[66A]	LTE B66	5	131997	1712.5	QPSK	1	12	66461	2112.5	4x4	LTE B2	20	900	1960	4x4	LTE B46	20	50665	5537.5	2x2	LTE B48	20	55990	3625	2x2	LTE B48	20	56188	3644.8	2x2	23.21	23.28
CA_[2A]-46A-[48C]-66A	LTE B66	5	131997	1712.5	QPSK	1	12	66461	2112.5	2x2	LTE B2	20	900	1960	4x4	LTE B46	20	50665	5537.5	2x2	LTE B48	20	55990	3625	4x4	LTE B48	20	56188	3644.8	4x4	23.17	23.28
CA_[2A]-46A-[48C]-[66A]	LTE B66	5	131997	1712.5	QPSK	1	12	66461	2112.5	4x4	LTE B2	20	900	1960	4x4	LTE B46	20	50665	5537.5	2x2	LTE B48	20	55990	3625	4x4	LTE B48	20	56188	3644.8	4x4	23.21	23.28
CA_2A-46C-48A-[66A]	LTE B66	5	131997	1712.5	QPSK	1	12	66461	2112.5	4x4	LTE B2	20	900	1960	2x2	LTE B46	20	50665	5537.5	2x2	LTE B46	20	50467	5517.7	2x2	LTE B48	20	55990	3625	2x2	23.17	23.28
CA_2A-46C-[48A]-66A	LTE B66	5	131997	1712.5	QPSK	1	12	66461	2112.5	2x2	LTE B2	20	900	1960	2x2	LTE B46	20	50665	5537.5	2x2	LTE B46	20	50467	5517.7	2x2	LTE B48	20	55990	3625	4x4	23.11	23.28
CA_2A-46C-[48A]-[66A]	LTE B66	5	131997	1712.5	QPSK	1	12	66461	2112.5	4x4	LTE B2	20	900	1960	2x2	LTE B46	20	50665	5537.5	2x2	LTE B46	20	50467	5517.7	2x2	LTE B48	20	55990	3625	4x4	23.20	23.28
CA_[2A]-46C-48A-66A	LTE B66	5	131997	1712.5	QPSK	1	12	66461	2112.5	2x2	LTE B2	20	900	1960	4x4	LTE B46	20	50665	5537.5	2x2	LTE B46	20	50467	5517.7	2x2	LTE B48	20	55990	3625	2x2	23.18	23.28
CA_[2A]-46C-48A-[66A]	LTE B66	5	131997	1712.5	QPSK	1	12	66461	2112.5	4x4	LTE B2	20	900	1960	4x4	LTE B46	20	50665	5537.5	2x2	LTE B46	20	50467	5517.7	2x2	LTE B48	20	55990	3625	2x2	23.21	23.28
CA_[2A]-46C-[48A]-66A	LTE B66	5	131997	1712.5	QPSK	1	12	66461	2112.5	2x2	LTE B2	20	900	1960	4x4	LTE B46	20	50665	5537.5	2x2	LTE B46	20	50467	5517.7	2x2	LTE B48	20	55990	3625	4x4	23.20	23.28
CA_[2A]-46C-[48A]-[66A]	LTE B66	5	131997	1712.5	QPSK	1	12	66461	2112.5	4x4	LTE B2	20	900	1960	4x4	LTE B46	20	50665	5537.5	2x2	LTE B46	20	50467	5517.7	2x2	LTE B48	20	55990	3625	4x4	23.17	23.28
CA_2A-48A-48C-[66A]	LTE B66	5	131997	1712.5	QPSK	1	12	66461	2112.5	4x4	LTE B2	20	900	1960	2x2	LTE B48	20	55990	3625	2x2	LTE B48	20	55340	3560	2x2	LTE B48	20	55538	3579.8	2x2	23.18	23.28
CA_2A-48A-[48C]-66A	LTE B66	5	131997	1712.5	QPSK	1	12	66461	2112.5	2x2	LTE B2	20	900	1960	2x2	LTE B48	20	55990	3625	2x2	LTE B48	20	55340	3560	4x4	LTE B48	20	55538	3579.8	4x4	23.16	23.28
CA_2A-48A-[48C]-[66A]	LTE B66	5	131997	1712.5	QPSK	1	12	66461	2112.5	4x4	LTE B2	20	900	1960	2x2	LTE B48	20	55990	3625	2x2	LTE B48	20	55340	3560	4x4	LTE B48	20	55538	3579.8	4x4	23.22	23.28
CA_2A-[48A]-48C-66A	LTE B66	5	131997	1712.5	QPSK	1	12	66461	2112.5	2x2	LTE B2	20	900	1960	2x2	LTE B48	20	55990	3625	4x4	LTE B48	20	55340	3560	2x2	LTE B48	20	55538	3579.8	2x2	23.19	23.28
CA_2A-[48A]-48C-[66A]	LTE B66	5	131997	1712.5	QPSK	1	12	66461	2112.5	4x4	LTE B2	20	900	1960	2x2	LTE B48	20	55990	3625	4x4	LTE B48	20	55340	3560	2x2	LTE B48	20	55538	3579.8	2x2	23.19	23.28
CA_2A-[48A]-[48C]-66A	LTE B66	5	131997	1712.5	QPSK	1	12	66461	2112.5	2x2	LTE B2	20	900	1960	2x2	LTE B48	20	55990	3625	4x4	LTE B48	20	55340	3560	4x4	LTE B48	20	55538	3579.8	4x4	23.17	23.28
CA_2A-[48A]-[48C]-[66A]	LTE B66	5	131997	1712.5	QPSK	1	12	66461	2112.5	4x4	LTE B2	20	900	1960	2x2	LTE B48	20	55990	3625	4x4	LTE B48	20	55340	3560	4x4	LTE B48	20	55538	3579.8	4x4	23.21	23.28
CA_[2A]-48A-48C-66A	LTE B66	5	131997	1712.5	QPSK	1	12	66461	2112.5	2x2	LTE B2	20	900	1960	4x4	LTE B48	20	55990	3625	2x2	LTE B48	20	55340	3560	2x2	LTE B48	20	55538	3579.8	2x2	23.13	23.28
CA_[2A]-48A-48C-[66A]	LTE B66	5	131997	1712.5	QPSK	1	12	66461	2112.5	4x4	LTE B2	20	900	1960	4x4	LTE B48	20	55990	3625	2x2	LTE B48	20	55340	3560	2x2	LTE B48	20	55538	3579.8	2x2	23.24	23.28
CA_[2A]-48A-[48C]-66A	LTE B66	5	131997	1712.5	QPSK	1	12	66461	2112.5	2x2	LTE B2	20	900	1960	4x4	LTE B48	20	55990	3625	2x2	LTE B48	20	55340	3560	4x4	LTE B48	20	55538	3579.8	4x4	23.16	23.28
CA_[2A]-48A-[48C]-[66A]	LTE B66	5	131997	1712.5	QPSK	1	12	66461	2112.5	4x4	LTE B2	20	900	1960	4x4	LTE B48	20	55990	3625	2x2	LTE B48	20	55340	3560	4x4	LTE B48	20	55538	3579.8	4x4	23.28	23.28
CA_[2A]-[48A]-48C-66A	LTE B66	5	131997	1712.5	QPSK	1	12	66461	2112.5	2x2	LTE B2	20	900	1960	4x4	LTE B48	20	55990	3625	4x4	LTE B48	20	55340	3560	2x2	LTE B48	20	55538	3579.8	2x2	23.18	23.28
CA_[2A]-[48A]-48C-[66A]	LTE B66	5	131997	1712.5	QPSK	1	12	66461	2112.5	4x4	LTE B2	20	900	1960	4x4	LTE B48	20	55990	3625	4x4	LTE B48	20	55340	3560	2x2	LTE B48	20	55538	3579.8	2x2	23.21	23.28
CA_[2A]-[48A]-[48C]-66A	LTE B66	5	131997	1712.5	QPSK	1	12	66461	2112.5	2x2	LTE B2	20	900	1960	4x4	LTE B48	20	55990	3625	4x4	LTE B48	20	55340	3560	4x4	LTE B48	20	55538	3579.8	4x4	23.16	23.28
CA_[2A]-[48A]-[48C]-[66A]	LTE B66	5	131997	1712.5	QPSK	1	12	66461	2112.5	4x4	LTE B2	20	900	1960	4x4	LTE B48	20	55990	3625	4x4	LTE B48	20	55340	3560	4x4	LTE B48	20	55538	3579.8	4x4	23.23	23.28
CA_[2A]-[48D]-[66A]	LTE B66	5	131997	1712.5	QPSK	1	12	66461	2112.5	4x4	LTE B2	20	900	1960	4x4	LTE B48	20	55990	3625	4x4	LTE B48	20	56188	3644.8	4x4	LTE B48	20	56386	3664.6	4x4	23.26	23.28
CA_5B-30A-66A-[66A]	LTE B66	5	131997	1712.5	QPSK	1	12	66461	2112.5	2x2	LTE B66	20	67236	2190	4x4	LTE B5	10	2525	881.5	2x2	LTE B5	5	2453	874.3	2x2	LTE B30	10	9820	2355	2x2	23.11	23.28
CA_5B-30A-[66A]-66A	LTE B66	5	131997	1712.5	QPSK	1	12	66461	2112.5	4x4	LTE B66	20	67236	2190	2x2	LTE B5	10	2525	881.5	2x2	LTE B5	5	2453	874.3	2x2	LTE B30	10	9820	2355	2x2	23.30	23.28
CA_5B-30A-[66A]-[66A]	LTE B66	5	131997	1712.5	QPSK	1	12	66461	2112.5	4x4	LTE B66	20	67236	2190	4x4	LTE B5	10	2525	881.5	2x2	LTE B5	5	2453	874.3	2x2	LTE B30	10	9820	2355	2x2	23.28	23.28
CA_5B-[30A]-66A-66A	LTE B66	5	131997	1712.5	QPSK	1	12	66461	2112.5	2x2	LTE B66	20	67236	2190	2x2	LTE B5	10	2525	881.5	2x2	LTE B5	5	2453	874.3	2x2	LTE B30	10	9820	2355	4x4	23.14	23.28
CA_5B-[30A]-66A-[66A]	LTE B66	5	131997	1712.5	QPSK	1	12	66461	2112.5	2x2	LTE B66	20	67236	2190	4x4	LTE B5	10	2525	881.5	2x2	LTE B5	5	2453	874.3	2x2	LTE B30	10	9820	2355	4x4	23.15	23.28
CA_5B-[30A]-[66A]-66A	LTE B66	5	131997	1712.5	QPSK	1	12	66461	2112.5	4x4	LTE B66	20	67236	2190	2x2	LTE B5	10	2525	881.5	2x2	LTE B5	5	2453	874.3	2x2	LTE B30	10	9820	2355	4x4	23.29	23.28
CA_5B-[30A]-[66A]-[66A]	LTE B66	5	131997	1712.5	QPSK	1	12	66461	2112.5	4x4	LTE B66	20	67236	2190	4x4	LTE B5	10	2525	881.5	2x2	LTE B5	5	2453	874.3	2x2	LTE B30	10	9820	2355	4x4	23.27	23.28
CA_5A-48D-[66A]	LTE B66	5	131997	1712.5	QPSK	1	12	66461	2112.5	4x4	LTE B5	10	2525	881.5	2x2	LTE B48	20	55990	3625	2x2	LTE B48	20	56188	3644.8	2x2	LTE B48	20	56386	3664.6	2x2	23.20	23.28
CA_5A-[48D]-66A	LTE B66	5	131997	1712.5	QPSK	1	12	66461	2112.5	2x2	LTE B5	10	2525	881.5	2x2	LTE B48	20	55990	3625	4x4	LTE B48	20	56188	3644.8	4x4	LTE B48	20	56386	3664.6	4x4	23.08	23.28
CA_5A-[48D]-[66A]	LTE B66	5	131997	1712.5	QPSK	1	12	66461	2112.5	4x4	LTE B5	10	2525	881.5	2x2	LTE B48	20	55990	3625	4x4	LTE B48	20	56188	3644.8	4x4	LTE B48	20	56386	3664.6	4x4	23.19	23.28
CA_13A-48A-48C-[66A]	LTE B66	5	131997	1712.5	QPSK	1	12	66461	2112.5	4x4	LTE B13	10	5230	751	2x2	LTE B48	20	55990	3625	2x2	LTE B48	20	55340	3560	2x2	LTE B48	20	55538	3579.8	2x2	23.16	23.28
CA_13A-48A-[48C]-66A	LTE B66	5	131997	1712.5	QPSK	1	12	66461	2112.5	2x2	LTE B13	10	5230	751	2x2	LTE B48	20	55990	3625	2x2	LTE B48	20	55340	3560	4x4	LTE B48	20	55538	3579.8	4x4	23.12	23.28
CA_13A-48A-[48C]-[66A]	LTE B66	5	131997	1712.5	QPSK	1	12	66461	2112.5	4x4	LTE B13	10	5230	751	2x2	LTE B48	20	55990	3625	2x2	LTE B48	20	55340	3560	4x4	LTE B48	20	55538	3579.8	4x4	23.19	23.28
CA_13A-[48A]-48C-66A	LTE B66	5	131997	1712.5	QPSK	1	12	66461	2112.5	2x2	LTE B13	10	5230	751	2x2	LTE B48	20	55990	3625	4x4	LTE B48	20	55340	3560	2x2	LTE B48	20	55538	3579.8	2x2	23.15	23.28
CA_13A-[48A]-48C-[66A]	LTE B66	5	131997	1712.5	QPSK	1	12	66461	2112.5	4x4	LTE B13	10	5230	751	2x2	LTE B48	20	55990	3625	4x4	LTE B48	20	55340	3560	2x2	LTE B48	20	55538	3579.8	2x2	23.18	23.28
CA_13A-[48A]-[48C]-66A	LTE B66	5	131997	1712.5	QPSK	1	12	66461	2112.5	2x2	LTE B13	10	5230	751	2x2	LTE B48	20	55990	3625	4x4	LTE B48	20	55340	3560	4x4	LTE B48	20	55538	3579.8	4x4	23.11	23.28
CA_13A-[48A]-[48C]-[66A]	LTE B66	5	131997	1712.5	QPSK	1	12	66461	2112.5	4x4	LTE B13	10	5230	751	2x2	LTE B48	20	55990	3625	4x4	LTE B48	20	55340	3560	4x4	LTE B48	20	55538	3579.8	4x4	23.21	23.28
CA_13A-48D-[66A]	LTE B66	5	131997	1712.5	QPSK	1	12	66461	2112.5	4x4	LTE B13	10	5230	751	2x2	LTE B48	20	55990	3625	2x2	LTE B48	20	56188	3644.8	2x2	LTE B48	20	56386	3664.6	2x2	23.17	23.28
CA_13A-[48D]-66A	LTE B66	5	131997	1712.5	QPSK	1	12	66461	2112.5	2x2	LTE B13	10	5230	751	2x2	LTE B48	20	55990	3625	4x4	LTE B48	20	56188	3644.8	4x4	LTE B48	20	56386	3664.6	4x4	23.16	23.28
CA_13A-[48D]-[66A]	LTE B66	5	131997	1712.5	QPSK	1	12	66461	2112.5	4x4	LTE B13	10	5230	751	2x2	LTE B48	20	55990	3625	4x4	LTE B48	20	56188	3644.8	4x4	LTE B48	20	56386	3664.6	4x4	23.19	23.28
CA_46A-46D-[66A]	LTE B66	5	131997	1712.5	QPSK	1	12	66461	2112.5	4x4	LTE B46	20	50665	5537.5	2x2	LTE B46	20	53540	5825	2x2	LTE B46	20	53342	5805.2	2x2	LTE B46	20	53144	5785.4	2x2	23.25	23.28
CA_48A-48C-[66B]	LTE B66	5	131997	1712.5	QPSK	1	12	66461	2112.5	4x4	LTE B66	15	66554	2121.8	4x4	LTE B48	20	55990	3625	2x2	LTE B48	20	55340	3560	2x2	LTE B48	20	55538	3579.8	2x2	23.20	23.28
CA_48A-[48C]-66B	LTE B66	5	131997	1712.5	QPSK	1	12	66461	2112.5	2x2	LTE B66	15	66554	2121.8	2x2	LTE B48	20	55990	3625	2x2	LTE B48	20	55340	3560	4x4	LTE B48	20	55538	3579.8	4x4	23.14	23.28
CA_48A-[48C]-[66B]	LTE B66	5	131997	1712.5	QPSK	1	12	66461	2112.5	4x4	LTE B66	15	66554	2121.8	4x4	LTE B48	20	55990	3625	2x2	LTE B48	20	55340	3560	4x4	LTE B48	20	55538	3579.8	4x4	23.22	23.28
CA_[48A]-48C-66B	LTE B66	5	131997	1712.5	QPSK	1	12	66461	2112.5	2x2	LTE B66	15	66554	2121.8	2x2	LTE B48	20	55990	3625	4x4	LTE B48	20	55340	3560	2x2	LTE B48	20	55538	3579.8	2x2	23.17	23.28
CA_[48A]-48C-[66B]	LTE B66	5	131997	1712.5	QPSK	1	12	66461	2112.5	4x4	LTE B66	15	66554	2121.8	4x4	LTE B48	20	55990	3625	4x4	LTE B48	20	55340	3560	2x2	LTE B48	20	55538	3579.8	2x2	23.24	23.28
CA_[48A]-[48C]-66B	LTE B66	5	131997	1712.5	QPSK	1	12	66461	2112.5	2x2	LTE B66	15	66554	2121.8	2x2	LTE B48	20	55990	3625	4x4	LTE B48	20	55340	3560	4x4	LTE B48	20	55538	3579.8	4x4	23.13	23.28
CA_[48A]-[48C]-[66B]	LTE B66	5	131997	1712.5	QPSK	1	12	66461	2112.5	4x4	LTE B66	15	66554	2121.8	4x4	LTE B48	20	55990	3625	4x4	LTE B48	20	55340	3560	4x4	LTE B48	20	55538	3579.8	4x4	23.25	23.28
CA_48A-48C-[66C]	LTE B66	5	131997	1712.5	QPSK	1	12	66461	2112.5	4x4	LTE B66	20	66578	2124.2	4x4	LTE B48	20	55990	3625	2x2	LTE B48	20	55340	3560	2x2	LTE B48	20	55538	3579.8	2x2	23.27	23.28
CA_48A-[48C]-66C	LTE B66	5	131997	1712.5	QPSK	1	12	66461	2112.5	2x2	LTE B66	20	66578	2124.2	2x2	LTE B48	20	55990	3625	2x2	LTE B48	20	55340	3560	4x4	LTE B48	20	55538	3579.8	4x4	23.11	23.28
CA_48A-[48C]-[66C]	LTE B66	5	131997	1712.5	QPSK	1	12	66461	2112.5	4x4	LTE B66	20	66578	2124.2	4x4	LTE B48	20	55990	3625	2x2	LTE B48	20	55340	3560	4x4	LTE B48	20	55538	3579.8	4x4	23.26	23.28
CA_[48A]-48C-66C	LTE B66	5	131997	1712.5	QPSK	1	12	66461	2112.5	2x2	LTE B66	20	66578	2124.2	2x2	LTE B48	20	55990	3625	4x4	LTE B48	20	55340	3560	2x2	LTE B48	20	55538	3579.8	2x2	23.15	23.28
CA_[48A]-48C-[66C]	LTE B66	5	131997	1712.5	QPSK	1	12	66461	2112.5	4x4	LTE B66	20	66578	2124.2	4x4	LTE B48	20	55990	3625	4x4	LTE B48	20	55340	3560	2x2	LTE B48	20	55538	3579.8	2x2	23.17	23.28
CA_[48A]-[48C]-66C	LTE B66	5	131997	1712.5	QPSK	1	12	66461	2112.5	2x2	LTE B66	20	66578	2124.2	2x2	LTE B48	20	55990	3625	4x4	LTE B48	20	55340	3560	4x4	LTE B48	20	55538	3579.8	4x4	23.10	23.28
CA_[48A]-[48C]-[66C]	LTE B66	5	131997	1712.5	QPSK	1	12	66461	2112.5	4x4	LTE B66	20	66578	2124.2	4x4	LTE B48	20	55990	3625	4x4	LTE B48	20	55340	3560	4x4	LTE B48	20	55538	3579.8	4x4	23.15	23.28
CA_48A-48D-[66A]	LTE B66	5	131997	1712.5	QPSK	1	12	66461	2112.5	4x4	LTE B48	20	55990	3625	2x2	LTE B48	20	56640	3690	2x2	LTE B48	20	56442	3670.2	2x2	LTE B48	20	56244	3650.4	2x2	23.21	23.28
CA_48A-[48D]-66A	LTE B66	5	131997	1712.5	QPSK	1	12	66461	2112.5	2x2	LTE B48	20	55990	3625	2x2	LTE B48	20	56640	3690	4x4	LTE B48	20	56442	3670.2	4x4	LTE B48	20	56244	3650.4	4x4	23.09	23.28
CA_48A-[48D]-[66A]	LTE B66	5	131997	1712.5	QPSK	1	12	66461	2112.5	4x4	LTE B48	20	55990	3625	2x2	LTE B48	20	56640	3690	4x4	LTE B48	20	56442	3670.2	4x4	LTE B48	20	56244	3650.4	4x4	23.24	23.28
CA_[48A]-48D-66A	LTE B66	5	131997	1712.5	QPSK	1	12	66461	2112.5	2x2	LTE B48	20	55990	3625	4x4	LTE B48	20	56640	3690	2x2	LTE B48	20	56442	3670.2	2x2	LTE B48	20	56244	3650.4	2x2	23.12	23.28
CA_[48A]-48D-[66A]	LTE B66	5	131997	1712.5	QPSK	1	12	66461	2112.5	4x4	LTE B48	20	55990	3625	4x4	LTE B48	20	56640	3690	2x2	LTE B48	20	56442	3670.2	2x2	LTE B48	20	56244	3650.4	2x2	23.22	23.28
CA_[48A]-[48D]-66A	LTE B66	5	131997	1712.5	QPSK	1	12	66461	2112.5	2x2	LTE B48	20	55990	3625	4x4	LTE B48	20	56640	3690	4x4	LTE B48	20	56442	3670.2	4x4	LTE B48	20	56244	3650.4	4x4	23.11	23.28
CA_[48A]-[48D]-[66A]	LTE B66	5	131997	1712.5	QPSK	1	12	66461	2112.5	4x4	LTE B48	20	55990	3625	4x4	LTE B48	20	56640	3690	4x4	LTE B48	20	56442	3670.2	4x4	LTE B48	20	56244	3650.4	4x4	23.18	23.28
CA_48C-48C-[66A]	LTE B66	5	131997	1712.5	QPSK	1	12	66461	2112.5	4x4	LTE B48	20	55990	3625	2x2	LTE B48	20	56188	3644.8	2x2	LTE B48	20	55340	3560	2x2	LTE B48	20	55538	3579.8	2x2	23.27	23.28
CA_[48C]-48C-66A	LTE B66	5	131997	1712.5	QPSK	1	12	66461	2112.5	2x2	LTE B48	20	55990	3625	2x2	LTE B48	20	56188	3644.8	2x2	LTE B48	20	55340	3560	4x4	LTE B48	20	55538	3579.8	4x4	23.16	23.28
CA_[48C]-48C-[66A]	LTE B66	5	131997	1712.5	QPSK	1	12	66461	2112.5	4x4	LTE B48	20	55990	3625	4x4	LTE B48	20	56188	3644.8	4x4	LTE B48	20	55340	3560	2x2	LTE B48	20	55538	3579.8	2x2	23.20	23.28
CA_[48C]-[48C]-66A	LTE B66	5	131997	1712.5	QPSK	1	12	66461	2112.5	2x2	LTE B48	20	55990	3625	4x4	LTE B48	20	56188	3644.8	4x4	LTE B48	20	55340	3560	4x4	LTE B48	20	55538	3579.8	4x4	23.15	23.28
CA_[48C]-[48C]-[66A]	LTE B66	5	131997	1712.5	QPSK	1	12	66461	2112.5	4x4	LTE B48	20	55990	3625	4x4	LTE B48	20	56188	3644.8	4x4	LTE B48	20	55340	3560	4x4	LTE B48	20	55538	3579.8	4x4	23.19	23.28
CA_[48E]-[66A]	LTE B66	5	131997	1712.5	QPSK	1	12	66461	2112.5	4x4	LTE B48	20	55990	3625	4x4	LTE B48	20	56188	3644.8	4x4	LTE B48	20	56386	3664.6	4x4	LTE B48	20	56584	3684.4	4x4	23.32	23.28

© 2021 PCTEST

Table J-22
Maximum Output Powers

	PCC										SCC 1					SCC 2					SCC 3					SCC 4					SCC 5					SCC 6					Power	
Combination	PCC Band	PCC BW [MHz]	PCC (UL) Ch.	PCC (UL) Freq. [MHz]	Mod.	PCC UL# RB	PCC UL RB Offset	PCC (DL) Ch.	PCC (DL) Freq. [MHz]	DL Ant. Config.	SCC Band	SCC BW [MHz]	SCC (DL) Ch.	SCC (DL) Freq. [MHz]	DL Ant. Config.	SCC Band	SCC BW [MHz]	SCC (DL) Ch.	SCC (DL) Freq. [MHz]	DL Ant. Config.	SCC Band	SCC BW [MHz]	SCC (DL) Ch.	SCC (DL) Freq. [MHz]	DL Ant. Config.	SCC Band	SCC BW [MHz]	SCC (DL) Ch.	SCC (DL) Freq. [MHz]	DL Ant. Config.	SCC Band	SCC BW [MHz]	SCC (DL) Ch.	SCC (DL) Freq. [MHz]	DL Ant. Config.	SCC Band	SCC BW [MHz]	SCC (DL) Ch.	SCC (DL) Freq. [MHz]	DL Ant. Config.	LTE Tx.Power with DL CA Enabled	LTE Single Carrier Tx Power (dBm)
CA_2A-5A-46C-[66A]-66A	LTE B66	5	131997	1712.5	QPSK	1	12	66461	2112.5	4x4	LTE B66	20	67236	2190	2x2	LTE B2	20	900	1960	2x2	LTE B5	10	2525	881.5	2x2	LTE B46	20	50665	5537.5	2x2	LTE B46	20	50467	5517.7	2x2	-	-	-	-	-	23.21	23.28
CA_2A-5A-46C-66A-[66A]	LTE B66	5	131997	1712.5	QPSK	1	12	66461	2112.5	2x2	LTE B66	20	67236	2190	4x4	LTE B2	20	900	1960	2x2	LTE B5	10	2525	881.5	2x2	LTE B46	20	50665	5537.5	2x2	LTE B46	20	50467	5517.7	2x2	-	-	-	-	-	23.24	23.28
CA_2A-5A-46C-[66A]-[66A]	LTE B66	5	131997	1712.5	QPSK	1	12	66461	2112.5	4x4	LTE B66	20	67236	2190	4x4	LTE B2	20	900	1960	2x2	LTE B5	10	2525	881.5	2x2	LTE B46	20	50665	5537.5	2x2	LTE B46	20	50467	5517.7	2x2	-	-	-	-	-	23.26	23.28
CA_[2A]-5A-46C-66A-66A	LTE B66	5	131997	1712.5	QPSK	1	12	66461	2112.5	2x2	LTE B66	20	67236	2190	2x2	LTE B2	20	900	1960	4x4	LTE B5	10	2525	881.5	2x2	LTE B46	20	50665	5537.5	2x2	LTE B46	20	50467	5517.7	2x2	-	-	-	-	-	23.21	23.28
CA_[2A]-5A-46C-[66A]-66A	LTE B66	5	131997	1712.5	QPSK	1	12	66461	2112.5	4x4	LTE B66	20	67236	2190	2x2	LTE B2	20	900	1960	4x4	LTE B5	10	2525	881.5	2x2	LTE B46	20	50665	5537.5	2x2	LTE B46	20	50467	5517.7	2x2	-	-	-	-	-	23.22	23.28
CA_[2A]-5A-46C-66A-[66A]	LTE B66	5	131997	1712.5	QPSK	1	12	66461	2112.5	2x2	LTE B66	20	67236	2190	4x4	LTE B2	20	900	1960	4x4	LTE B5	10	2525	881.5	2x2	LTE B46	20	50665	5537.5	2x2	LTE B46	20	50467	5517.7	2x2	-	-	-	-	-	23.27	23.28
CA_[2A]-5A-46C-[66A]-[66A]	LTE B66	5	131997	1712.5	QPSK	1	12	66461	2112.5	4x4	LTE B66	20	67236	2190	4x4	LTE B2	20	900	1960	4x4	LTE B5	10	2525	881.5	2x2	LTE B46	20	50665	5537.5	2x2	LTE B46	20	50467	5517.7	2x2	-	-	-	-	-	23.21	23.28
CA_2A-5A-48C-[66A]-66A	LTE B66	5	131997	1712.5	QPSK	1	12	66461	2112.5	4x4	LTE B66	20	67236	2190	2x2	LTE B2	20	900	1960	2x2	LTE B5	10	2525	881.5	2x2	LTE B48	20	55990	3625	2x2	LTE B48	20	56188	3644.8	2x2	-	-	-	-	-	23.19	23.28
CA_2A-5A-48C-66A-[66A]	LTE B66	5	131997	1712.5	QPSK	1	12	66461	2112.5	2x2	LTE B66	20	67236	2190	4x4	LTE B2	20	900	1960	2x2	LTE B5	10	2525	881.5	2x2	LTE B48	20	55990	3625	2x2	LTE B48	20	56188	3644.8	2x2	-	-	-	-	-	23.25	23.28
CA_2A-5A-48C-[66A]-[66A]	LTE B66	5	131997	1712.5	QPSK	1	12	66461	2112.5	4x4	LTE B66	20	67236	2190	4x4	LTE B2	20	900	1960	2x2	LTE B5	10	2525	881.5	2x2	LTE B48	20	55990	3625	2x2	LTE B48	20	56188	3644.8	2x2	-	-	-	-	-	23.26	23.28
CA_2A-5A-[48C]-66A-66A	LTE B66	5	131997	1712.5	QPSK	1	12	66461	2112.5	2x2	LTE B66	20	67236	2190	2x2	LTE B2	20	900	1960	2x2	LTE B5	10	2525	881.5	2x2	LTE B48	20	55990	3625	4x4	LTE B48	20	56188	3644.8	4x4	-	-	-	-	-	23.27	23.28
CA_[2A]-5A-48C-66A-66A	LTE B66	5	131997	1712.5	QPSK	1	12	66461	2112.5	2x2	LTE B66	20	67236	2190	2x2	LTE B2	20	900	1960	4x4	LTE B5	10	2525	881.5	2x2	LTE B48	20	55990	3625	2x2	LTE B48	20	56188	3644.8	2x2	-	-	-	-	-	23.22	23.28
CA_[2A]-5A-48C-[66A]-66A	LTE B66	5	131997	1712.5	QPSK	1	12	66461	2112.5	4x4	LTE B66	20	67236	2190	2x2	LTE B2	20	900	1960	4x4	LTE B5	10	2525	881.5	2x2	LTE B48	20	55990	3625	2x2	LTE B48	20	56188	3644.8	2x2	-	-	-	-	-	23.24	23.28
CA_[2A]-5A-48C-66A-[66A]	LTE B66	5	131997	1712.5	QPSK	1	12	66461	2112.5	2x2	LTE B66	20	67236	2190	4x4	LTE B2	20	900	1960	4x4	LTE B5	10	2525	881.5	2x2	LTE B48	20	55990	3625	2x2	LTE B48	20	56188	3644.8	2x2	-	-	-	-	-	23.28	23.28
CA_[2A]-5A-48C-[66A]-[66A]	LTE B66	5	131997	1712.5	QPSK	1	12	66461	2112.5	4x4	LTE B66	20	67236	2190	4x4	LTE B2	20	900	1960	4x4	LTE B5	10	2525	881.5	2x2	LTE B48	20	55990	3625	2x2	LTE B48	20	56188	3644.8	2x2	-	-	-	-	-	23.26	23.28
CA_2A-13A-46C-[66A]-66A	LTE B66	5	131997	1712.5	QPSK	1	12	66461	2112.5	4x4	LTE B66	20	67236	2190	2x2	LTE B2	20	900	1960	2x2	LTE B13	10	5230	751	2x2	LTE B46	20	50665	5537.5	2x2	LTE B46	20	50467	5517.7	2x2	-	-	-	-	-	23.27	23.28
CA_2A-13A-46C-66A-[66A]	LTE B66	5	131997	1712.5	QPSK	1	12	66461	2112.5	2x2	LTE B66	20	67236	2190	4x4	LTE B2	20	900	1960	2x2	LTE B13	10	5230	751	2x2	LTE B46	20	50665	5537.5	2x2	LTE B46	20	50467	5517.7	2x2	-	-	-	-	-	23.21	23.28
CA_2A-13A-46C-[66A]-[66A]	LTE B66	5	131997	1712.5	QPSK	1	12	66461	2112.5	4x4	LTE B66	20	67236	2190	4x4	LTE B2	20	900	1960	2x2	LTE B13	10	5230	751	2x2	LTE B46	20	50665	5537.5	2x2	LTE B46	20	50467	5517.7	2x2	-	-	-	-	-	23.23	23.28
CA_[2A]-13A-46C-66A-66A	LTE B66	5	131997	1712.5	QPSK	1	12	66461	2112.5	2x2	LTE B66	20	67236	2190	2x2	LTE B2	20	900	1960	4x4	LTE B13	10	5230	751	2x2	LTE B46	20	50665	5537.5	2x2	LTE B46	20	50467	5517.7	2x2	-	-	-	-	-	23.24	23.28
CA_[2A]-13A-46C-[66A]-66A	LTE B66	5	131997	1712.5	QPSK	1	12	66461	2112.5	4x4	LTE B66	20	67236	2190	2x2	LTE B2	20	900	1960	4x4	LTE B13	10	5230	751	2x2	LTE B46	20	50665	5537.5	2x2	LTE B46	20	50467	5517.7	2x2	-	-	-	-	-	23.25	23.28
CA_[2A]-13A-46C-66A-[66A]	LTE B66	5	131997	1712.5	QPSK	1	12	66461	2112.5	2x2	LTE B66	20	67236	2190	4x4	LTE B2	20	900	1960	4x4	LTE B13	10	5230	751	2x2	LTE B46	20	50665	5537.5	2x2	LTE B46	20	50467	5517.7	2x2	-	-	-	-	-	23.20	23.28
CA_[2A]-13A-46C-[66A]-[66A]	LTE B66	5	131997	1712.5	QPSK	1	12	66461	2112.5	4x4	LTE B66	20	67236	2190	4x4	LTE B2	20	900	1960	4x4	LTE B13	10	5230	751	2x2	LTE B46	20	50665	5537.5	2x2	LTE B46	20	50467	5517.7	2x2	-	-	-	-	-	23.21	23.28
CA_2A-46A-48D-[66A]	LTE B66	5	131997	1712.5	QPSK	1	12	66461	2112.5	4x4	LTE B2	20	900	1960	2x2	LTE B46	20	50665	5537.5	2x2	LTE B48	20	55990	3625	2x2	LTE B48	20	56188	3644.8	2x2	LTE B48	20	56386	3664.6	2x2	-	-	-	-	-	23.19	23.28
CA_2A-46A-[48D]-66A	LTE B66	5	131997	1712.5	QPSK	1	12	66461	2112.5	2x2	LTE B2	20	900	1960	2x2	LTE B46	20	50665	5537.5	2x2	LTE B48	20	55990	3625	4x4	LTE B48	20	56188	3644.8	4x4	LTE B48	20	56386	3664.6	4x4	-	-	-	-	-	23.31	23.28
CA_2A-46A-[48D]-[66A]	LTE B66	5	131997	1712.5	QPSK	1	12	66461	2112.5	4x4	LTE B2	20	900	1960	2x2	LTE B46	20	50665	5537.5	2x2	LTE B48	20	55990	3625	4x4	LTE B48	20	56188	3644.8	4x4	LTE B48	20	56386	3664.6	4x4	-	-	-	-	-	23.29	23.28
CA_[2A]-46A-48D-66A	LTE B66	5	131997	1712.5	QPSK	1	12	66461	2112.5	2x2	LTE B2	20	900	1960	4x4	LTE B46	20	50665	5537.5	2x2	LTE B48	20	55990	3625	2x2	LTE B48	20	56188	3644.8	2x2	LTE B48	20	56386	3664.6	2x2	-	-	-	-	-	23.21	23.28
CA_[2A]-46A-48D-[66A]	LTE B66	5	131997	1712.5	QPSK	1	12	66461	2112.5	4x4	LTE B2	20	900	1960	4x4	LTE B46	20	50665	5537.5	2x2	LTE B48	20	55990	3625	2x2	LTE B48	20	56188	3644.8	2x2	LTE B48	20	56386	3664.6	2x2	-	-	-	-	-	23.19	23.28
CA_[2A]-46A-[48D]-66A	LTE B66	5	131997	1712.5	QPSK	1	12	66461	2112.5	2x2	LTE B2	20	900	1960	4x4	LTE B46	20	50665	5537.5	2x2	LTE B48	20	55990	3625	4x4	LTE B48	20	56188	3644.8	4x4	LTE B48	20	56386	3664.6	4x4	-	-	-	-	-	22.90	23.28
CA_2A-46C-48C-[66A]	LTE B66	5	131997	1712.5	QPSK	1	12	66461	2112.5	4x4	LTE B2	20	900	1960	2x2	LTE B46	20	50665	5537.5	2x2	LTE B46	20	50467	5517.7	2x2	LTE B48	20	55990	3625	2x2	LTE B48	20	56188	3644.8	2x2	-	-	-	-	-	23.17	23.28
CA_2A-46C-[48C]-66A	LTE B66	5	131997	1712.5	QPSK	1	12	66461	2112.5	2x2	LTE B2	20	900	1960	2x2	LTE B46	20	50665	5537.5	2x2	LTE B46	20	50467	5517.7	2x2	LTE B48	20	55990	3625	4x4	LTE B48	20	56188	3644.8	4x4	-	-	-	-	-	23.21	23.28
CA_2A-46C-[48C]-[66A]	LTE B66	5	131997	1712.5	QPSK	1	12	66461	2112.5	4x4	LTE B2	20	900	1960	2x2	LTE B46	20	50665	5537.5	2x2	LTE B46	20	50467	5517.7	2x2	LTE B48	20	55990	3625	4x4	LTE B48	20	56188	3644.8	4x4	-	-	-	-	-	23.20	23.28
CA_[2A]-46C-48C-66A	LTE B66	5	131997	1712.5	QPSK	1	12	66461	2112.5	2x2	LTE B2	20	900	1960	4x4	LTE B46	20	50665	5537.5	2x2	LTE B46	20	50467	5517.7	2x2	LTE B48	20	55990	3625	2x2	LTE B48	20	56188	3644.8	2x2	-	-	-	-	-	23.25	23.28
CA_[2A]-46C-48C-[66A]	LTE B66	5	131997	1712.5	QPSK	1	12	66461	2112.5	4x4	LTE B2	20	900	1960	4x4	LTE B46	20	50665	5537.5	2x2	LTE B46	20	50467	5517.7	2x2	LTE B48	20	55990	3625	2x2	LTE B48	20	56188	3644.8	2x2	-	-	-	-	-	23.30	23.28
CA_[2A]-46C-[48C]-66A	LTE B66	5	131997	1712.5	QPSK	1	12	66461	2112.5	2x2	LTE B2	20	900	1960	4x4	LTE B46	20	50665	5537.5	2x2	LTE B46	20	50467	5517.7	2x2	LTE B48	20	55990	3625	4x4	LTE B48	20	56188	3644.8	4x4	-	-	-	-	-	23.27	23.28
CA_[2A]-46C-[48C]-[66A]	LTE B66	5	131997	1712.5	QPSK	1	12	66461	2112.5	4x4	LTE B2	20	900	1960	4x4	LTE B46	20	50665	5537.5	2x2	LTE B46	20	50467	5517.7	2x2	LTE B48	20	55990	3625	4x4	LTE B48	20	56188	3644.8	4x4	-	-	-	-	-	23.27	23.28
CA_2A-46D-48A-[66A]	LTE B66	5	131997	1712.5	QPSK	1	12	66461	2112.5	4x4	LTE B2	20	900	1960	2x2	LTE B46	20	50665	5537.5	2x2	LTE B46	20	50467	5517.7	2x2	LTE B46	20	50863	5557.3	2x2	LTE B48	20	55990	3625	2x2	-	-	-	-	-	23.19	23.28
CA_2A-46D-[48A]-66A	LTE B66	5	131997	1712.5	QPSK	1	12	66461	2112.5	2x2	LTE B2	20	900	1960	2x2	LTE B46	20	50665	5537.5	2x2	LTE B46	20	50467	5517.7	2x2	LTE B46	20	50863	5557.3	2x2	LTE B48	20	55990	3625	4x4	-	-	-	-	-	23.27	23.28
CA_2A-46D-[48A]-[66A]	LTE B66	5	131997	1712.5	QPSK	1	12	66461	2112.5	4x4	LTE B2	20	900	1960	2x2	LTE B46	20	50665	5537.5	2x2	LTE B46	20	50467	5517.7	2x2	LTE B46	20	50863	5557.3	2x2	LTE B48	20	55990	3625	4x4	-	-	-	-	-	23.23	23.28
CA_[2A]-46D-48A-66A	LTE B66	5	131997	1712.5	QPSK	1	12	66461	2112.5	2x2	LTE B2	20	900	1960	4x4	LTE B46	20	50665	5537.5	2x2	LTE B46	20	50467	5517.7	2x2	LTE B46	20	50863	5557.3	2x2	LTE B48	20	55990	3625	2x2	-	-	-	-	-	23.22	23.28
CA_[2A]-46D-48A-[66A]	LTE B66	5	131997	1712.5	QPSK	1	12	66461	2112.5	4x4	LTE B2	20	900	1960	4x4	LTE B46	20	50665	5537.5	2x2	LTE B46	20	50467	5517.7	2x2	LTE B46	20	50863	5557.3	2x2	LTE B48	20	55990	3625	2x2	-	-	-	-	-	23.17	23.28
CA_[2A]-46D-[48A]-66A	LTE B66	5	131997	1712.5	QPSK	1	12	66461	2112.5	2x2	LTE B2	20	900	1960	4x4	LTE B46	20	50665	5537.5	2x2	LTE B46	20	50467	5517.7	2x2	LTE B46	20	50863	5557.3	2x2	LTE B48	20	55990	3625	4x4	-	-	-	-	-	23.39	23.28
CA_[2A]-46D-[48A]-[66A]	LTE B66	5	131997	1712.5	QPSK	1	12	66461	2112.5	4x4	LTE B2	20	900	1960	4x4	LTE B46	20	50665	5537.5	2x2	LTE B46	20	50467	5517.7	2x2	LTE B46	20	50863	5557.3	2x2	LTE B48	20	55990	3625	4x4	-	-	-	-	-	23.21	23.28
CA_2A-48E-[66A]	LTE B66	5	131997	1712.5	QPSK	1	12	66461	2112.5	4x4	LTE B2	20	900	1960	2x2	LTE B48	20	55990	3625	2x2	LTE B48	20	56188	3644.8	2x2	LTE B48	20	56386	3664.6	2x2	LTE B48	20	55792	3605.2	2x2	-	-	-	-	-	23.28	23.28
CA_2A-[48E]-66A	LTE B66	5	131997	1712.5	QPSK	1	12	66461	2112.5	2x2	LTE B2	20	900	1960	2x2	LTE B48	20	55990	3625	4x4	LTE B48	20	56188	3644.8	4x4	LTE B48	20	56386	3664.6	4x4	LTE B48	20	55792	3605.2	4x4	-	-	-	-	-	23.37	23.28
CA_[2A]-48E-66A	LTE B66	5	131997	1712.5	QPSK	1	12	66461	2112.5	2x2	LTE B2	20	900	1960	4x4	LTE B48	20	55990	3625	2x2	LTE B48	20	56188	3644.8	2x2	LTE B48	20	56386	3664.6	2x2	LTE B48	20	55792	3605.2	2x2	-	-	-	-	-	23.28	23.28
CA_[2A]-48E-[66A]	LTE B66	5	131997	1712.5	QPSK	1	12	66461	2112.5	4x4	LTE B2	20	900	1960	4x4	LTE B48	20	55990	3625	2x2	LTE B48	20	56188	3644.8	2x2	LTE B48	20	56386	3664.6	2x2	LTE B48	20	55792	3605.2	2x2	-	-	-	-	-	23.29	23.28
CA_13A-46E-[66A]	LTE B66	5	131997	1712.5	QPSK	1	12	66461	2112.5	4x4	LTE B13	10	5230	751	2x2	LTE B46	20	50665	5537.5	2x2	LTE B46	20	50467	5517.7	2x2	LTE B46	20	50863	5557.3	2x2	LTE B46	20	50269	5497.9	2x2	-	-	-	-	-	23.21	23.28
CA_13A-48E-[66A]	LTE B66	5	131997	1712.5	QPSK	1	12	66461	2112.5	4x4	LTE B13	10	5230	751	2x2	LTE B48	20	55990	3625	2x2	LTE B48	20	56188	3644.8	2x2	LTE B48	20	56386	3664.6	2x2	LTE B48	20	55792	3605.2	2x2	-	-	-	-	-	24.64	24.78
CA_13A-[48E]-66A	LTE B66	5	131997	1712.5	QPSK	1	12	66461	2112.5	2x2	LTE B13	10	5230	751	2x2	LTE B48	20	55990	3625	4x4	LTE B48	20	56188	3644.8	4x4	LTE B48	20	56386	3664.6	4x4	LTE B48	20	55792	3605.2	4x4	-	-	-	-	-	23.18	23.28
CA_46A-48E-[66A]	LTE B66	5	131997	1712.5	QPSK	1	12	66461	2112.5	4x4	LTE B46	20	50665	5537.5	2x2	LTE B48	20	55990	3625	2x2	LTE B48	20	56188	3644.8	2x2	LTE B48	20	56386	3664.6	2x2	LTE B48	20	55792	3605.2	2x2	-	-	-	-	-	23.24	23.28
CA_46A-[48E]-66A	LTE B66	5	131997	1712.5	QPSK	1	12	66461	2112.5	2x2	LTE B46	20	50665	5537.5	2x2	LTE B48	20	55990	3625	4x4	LTE B48	20	56188	3644.8	4x4	LTE B48	20	56386	3664.6	4x4	LTE B48	20	55792	3605.2	4x4	-	-	-	-	-	23.32	23.28
CA_46C-[48D]-[66A]	LTE B66	5	131997	1712.5	QPSK	1	12	66461	2112.5	4x4	LTE B46	20	50665	5537.5	2x2	LTE B46	20	50467	5517.7	2x2	LTE B48	20	55990	3625	2x2	LTE B48	20	56188	3644.8	2x2	LTE B48	20	56386	3664.6	2x2	-	-	-	-	-	23.29	23.28
CA_2A-5A-46D-[66A]-66A	LTE B66	5	131997	1712.5	QPSK	1	12	66461	2112.5	4x4	LTE B66	20	67236	2190	2x2	LTE B2	20	900	1960	2x2	LTE B5	10	2525	881.5	2x2	LTE B46	20	50665	5537.5	2x2	LTE B46	20	50467	5517.7	2x2	LTE B46	20	50863	5557.3	2x2	23.21	23.28
CA_2A-5A-46D-66A-[66A]	LTE B66	5	131997	1712.5	QPSK	1	12	66461	2112.5	2x2	LTE B66	20	67236	2190	4x4	LTE B2	20	900	1960	2x2	LTE B5	10	2525	881.5	2x2	LTE B46	20	50665	5537.5	2x2	LTE B46	20	50467	5517.7	2x2	LTE B46	20	50863	5557.3	2x2	23.26	23.28
CA_2A-5A-46D-[66A]-[66A]	LTE B66	5	131997	1712.5	QPSK	1	12	66461	2112.5	4x4	LTE B66	20	67236	2190	4x4	LTE B2	20	900	1960	2x2	LTE B5	10	2525	881.5	2x2	LTE B46	20	50665	5537.5	2x2	LTE B46	20	50467	5517.7	2x2	LTE B46	20	50863	5557.3	2x2	23.22	23.28
CA_[2A]-5A-46D-66A-66A	LTE B66	5	131997	1712.5	QPSK	1	12	66461	2112.5	2x2	LTE B66	20	67236	2190	2x2	LTE B2	20	900	1960	4x4	LTE B5	10	2525	881.5	2x2	LTE B46	20	50665	5537.5	2x2	LTE B46	20	50467	5517.7	2x2	LTE B46	20	50863	5557.3	2x2	23.30	23.28
CA_[2A]-5A-46D-[66A]-66A	LTE B66	5	131997	1712.5	QPSK	1	12	66461	2112.5	4x4	LTE B66	20	67236	2190	2x2	LTE B2	20	900	1960	4x4	LTE B5	10	2525	881.5	2x2	LTE B46	20	50665	5537.5	2x2	LTE B46	20	50467	5517.7	2x2	LTE B46	20	50863	5557.3	2x2	23.24	23.28
CA_[2A]-5A-46D-66A-[66A]	LTE B66	5	131997	1712.5	QPSK	1	12	66461	2112.5	2x2	LTE B66	20	67236	2190	4x4	LTE B2	20	900	1960	4x4	LTE B5	10	2525	881.5	2x2	LTE B46	20	50665	5537.5	2x2	LTE B46	20	50467	5517.7	2x2	LTE B46	20	50863	5557.3	2x2	23.25	23.28
CA_[2A]-5A-46D-[66A]-[66A]	LTE B66	5	131997	1712.5	QPSK	1	12	66461	2112.5	4x4	LTE B66	20	67236	2190	4x4	LTE B2	20	900	1960	4x4	LTE B5	10	2525	881.5	2x2	LTE B46	20	50665	5537.5	2x2	LTE B46	20	50467	5517.7	2x2	LTE B46	20	50863	5557.3	2x2	23.26	23.28
CA_2A-5A-46E-[66A]	LTE B66	5	131997	1712.5	QPSK	1	12	66461	2112.5	4x4	LTE B2	20	900	1960	2x2	LTE B5	10	2525	881.5	2x2	LTE B46	20	50665	5537.5	2x2	LTE B46	20	50467	5517.7	2x2	LTE B46	20	50863	5557.3	2x2	LTE B46	20	51061	5577.1	2x2	23.23	23.28
CA_[2A]-5A-46E-66A	LTE B66	5	131997	1712.5	QPSK	1	12	66461	2112.5	2x2	LTE B2	20	900	1960	4x4	LTE B5	10	2525	881.5	2x2	LTE B46	20	50665	5537.5	2x2	LTE B46	20	50467	5517.7	2x2	LTE B46	20	50863	5557.3	2x2	LTE B46	20	51061	5577.1	2x2	23.27	23.28
CA_[2A]-5A-46E-[66A]	LTE B66	5	131997	1712.5	QPSK	1	12	66461	2112.5	4x4	LTE B2	20	900	1960	4x4	LTE B5	10	2525	881.5	2x2	LTE B46	20	50665	5537.5	2x2	LTE B46	20	50467	5517.7	2x2	LTE B46	20	50863	5557.3	2x2	LTE B46	20	51061	5577.1	2x2	23.28	23.28
CA_2A-13A-46D-[66A]-66A	LTE B66	5	131997	1712.5	QPSK	1	12	66461	2112.5	4x4	LTE B66	20	67236	2190	2x2	LTE B2	20	900	1960	2x2	LTE B13	10	5230	751	2x2	LTE B46	20	50665	5537.5	2x2	LTE B46	20	50467	5517.7	2x2	LTE B46	20	50863	5557.3	2x2	23.27	23.28
CA_2A-13A-46D-66A-[66A]	LTE B66	5	131997	1712.5	QPSK	1	12	66461	2112.5	2x2	LTE B66	20	67236	2190	4x4	LTE B2	20	900	1960	2x2	LTE B13	10	5230	751	2x2	LTE B46	20	50665	5537.5	2x2	LTE B46	20	50467	5517.7	2x2	LTE B46	20	50863	5557.3	2x2	23.29	23.28
CA_2A-13A-46D-[66A]-[66A]	LTE B66	5	131997	1712.5	QPSK	1	12	66461	2112.5	4x4	LTE B66	20	67236	2190	4x4	LTE B2	20	900	1960	2x2	LTE B13	10	5230	751	2x2	LTE B46	20	50665	5537.5	2x2	LTE B46	20	50467	5517.7	2x2	LTE B46	20	50863	5557.3	2x2	23.28	23.28
CA_[2A]-13A-46D-66A-66A	LTE B66	5	131997	1712.5	QPSK	1	12	66461	2112.5	2x2	LTE B66	20	67236	2190	2x2	LTE B2	20	900	1960	4x4	LTE B13	10	5230	751	2x2	LTE B46	20	50665	5537.5	2x2	LTE B46	20	50467	5517.7	2x2	LTE B46	20	50863	5557.3	2x2	23.31	23.28
CA_[2A]-13A-46D-[66A]-66A	LTE B66	5	131997	1712.5	QPSK	1	12	66461	2112.5	4x4	LTE B66	20	67236	2190	2x2	LTE B2	20	900	1960	4x4	LTE B13	10	5230	751	2x2	LTE B46	20	50665	5537.5	2x2	LTE B46	20	50467	5517.7	2x2	LTE B46	20	50863	5557.3	2x2	23.24	23.28
CA_[2A]-13A-46D-66A-[66A]	LTE B66	5	131997	1712.5	QPSK	1	12	66461	2112.5	2x2	LTE B66	20	67236	2190	4x4	LTE B2	20	900	1960	4x4	LTE B13	10	5230	751	2x2	LTE B46	20	50665	5537.5	2x2	LTE B46	20	50467	5517.7	2x2	LTE B46	20	50863	5557.3	2x2	23.33	23.28
CA_[2A]-13A-46D-[66A]-[66A]	LTE B66	5	131997	1712.5	QPSK	1	12	66461	2112.5	4x4	LTE B66	20	67236	2190	4x4	LTE B2	20	900	1960	4x4	LTE B13	10	5230	751	2x2	LTE B46	20	50665	5537.5	2x2	LTE B46	20	50467	5517.7	2x2	LTE B46	20	50863	5557.3	2x2	23.28	23.28
CA_2A-46C-48D-[66A]	LTE B66	5	131997	1712.5	QPSK	1	12	66461	2112.5	4x4	LTE B2	20	900	1960	2x2	LTE B46	20	50665	5537.5	2x2	LTE B46	20	50467	5517.7	2x2	LTE B48	20	55990	3625	2x2	LTE B48	20	56188	3644.8	2x2	LTE B48	20	56386	3664.6	2x2	23.29	23.28
CA_2A-46C-[48D]-66A	LTE B66	5	131997	1712.5	QPSK	1	12	66461	2112.5	2x2	LTE B2	20	900	1960	2x2	LTE B46	20	50665	5537.5	2x2	LTE B46	20	50467	5517.7	2x2	LTE B48	20	55990	3625	4x4	LTE B48	20	56188	3644.8	4x4	LTE B48	20	56386	3664.6	4x4	23.32	23.28
CA_[2A]-46C-48D-66A	LTE B66	5	131997	1712.5	QPSK	1	12	66461	2112.5	2x2	LTE B2	20	900	1960	4x4	LTE B46	20	50665	5537.5	2x2	LTE B46	20	50467	5517.7	2x2	LTE B48	20	55990	3625	2x2	LTE B48	20	56188	3644.8	2x2	LTE B48	20	56386	3664.6	2x2	23.35	23.28
CA_[2A]-46C-48D-[66A]	LTE B66	5	131997	1712.5	QPSK	1	12	66461	2112.5	4x4	LTE B2	20	900	1960	4x4	LTE B46	20	50665	5537.5	2x2	LTE B46	20	50467	5517.7	2x2	LTE B48	20	55990	3625	2x2	LTE B48	20	56188	3644.8	2x2	LTE B48	20	56386	3664.6	2x2	23.34	23.28
CA_2A-46D-48C-[66A]	LTE B66	5	131997	1712.5	QPSK	1	12	66461	2112.5	4x4	LTE B2	20	900	1960	2x2	LTE B46	20	50665	5537.5	2x2	LTE B46	20	50467	5517.7	2x2	LTE B46	20	50269	5497.9	2x2	LTE B48	20	55990	3625	2x2	LTE B48	20	56188	3644.8	2x2	23.31	23.28
CA_2A-46D-[48C]-66A	LTE B66	5	131997	1712.5	QPSK	1	12	66461	2112.5	2x2	LTE B2	20	900	1960	2x2	LTE B46	20	50665	5537.5	2x2	LTE B46	20	50467	5517.7	2x2	LTE B46	20	50269	5497.9	2x2	LTE B48	20	55990	3625	4x4	LTE B48	20	56188	3644.8	4x4	23.42	23.28
CA_2A-46D-[48C]-[66A]	LTE B66	5	131997	1712.5	QPSK	1	12	66461	2112.5	4x4	LTE B2	20	900	1960	2x2	LTE B46	20	50665	5537.5	2x2	LTE B46	20	50467	5517.7	2x2	LTE B46	20	50269	5497.9	2x2	LTE B48	20	55990	3625	4x4	LTE B48	20	56188	3644.8	4x4	23.32	23.28
CA_[2A]-46D-48C-66A	LTE B66	5	131997	1712.5	QPSK	1	12	66461	2112.5	2x2	LTE B2	20	900	1960	4x4	LTE B46	20	50665	5537.5	2x2	LTE B46	20	50467	5517.7	2x2	LTE B46	20	50269	5497.9	2x2	LTE B48	20	55990	3625	2x2	LTE B48	20	56188	3644.8	2x2	23.34	23.28
CA_[2A]-46D-48C-[66A]	LTE B66	5	131997	1712.5	QPSK	1	12	66461	2112.5	4x4	LTE B2	20	900	1960	4x4	LTE B46	20	50665	5537.5	2x2	LTE B46	20	50467	5517.7	2x2	LTE B46	20	50269	5497.9	2x2	LTE B48	20	55990	3625	2x2	LTE B48	20	56188	3644.8	2x2	23.32	23.28
CA_[2A]-46D-[48C]-66A	LTE B66	5	131997	1712.5	QPSK	1	12	66461	2112.5	2x2	LTE B2	20	900	1960	4x4	LTE B46	20	50665	5537.5	2x2	LTE B46	20	50467	5517.7	2x2	LTE B46	20	50269	5497.9	2x2	LTE B48	20	55990	3625	4x4	LTE B48	20	56188	3644.8	4x4	23.40	23.28
CA_2A-46E-48A-[66A]	LTE B66	5	131997	1712.5	QPSK	1	12	66461	2112.5	4x4	LTE B2	20	900	1960	2x2	LTE B46	20	50665	5537.5	2x2	LTE B46	20	50467	5517.7	2x2	LTE B46	20	50863	5557.3	2x2	LTE B46	20	51061	5577.1	2x2	LTE B48	20	55990	3625	2x2	23.34	23.28
CA_2A-46E-[48A]-66A	LTE B66	5	131997	1712.5	QPSK	1	12	66461	2112.5	2x2	LTE B2	20	900	1960	2x2	LTE B46	20	50665	5537.5	2x2	LTE B46	20	50467	5517.7	2x2	LTE B46	20	50863	5557.3	2x2	LTE B46	20	51061	5577.1	2x2	LTE B48	20	55990	3625	4x4	23.32	23.28
CA_2A-46E-[48A]-[66A]	LTE B66	5	131997	1712.5	QPSK	1	12	66461	2112.5	4x4	LTE B2	20	900	1960	2x2	LTE B46	20	50665	5537.5	2x2	LTE B46	20	50467	5517.7	2x2	LTE B46	20	50863	5557.3	2x2	LTE B46	20	51061	5577.1	2x2	LTE B48	20	55990	3625	4x4	23.33	23.28
CA_[2A]-46E-48A-66A	LTE B66	5	131997	1712.5	QPSK	1	12	66461	2112.5	2x2	LTE B2	20	900	1960	4x4	LTE B46	20	50665	5537.5	2x2	LTE B46	20	50467	5517.7	2x2	LTE B46	20	50863	5557.3	2x2	LTE B46	20	51061	5577.1	2x2	LTE B48	20	55990	3625	2x2	23.43	23.28
CA_[2A]-46E-48A-[66A]	LTE B66	5	131997	1712.5	QPSK	1	12	66461	2112.5	4x4	LTE B2	20	900	1960	4x4	LTE B46	20	50665	5537.5	2x2	LTE B46	20	50467	5517.7	2x2	LTE B46	20	50863	5557.3	2x2	LTE B46	20	51061	5577.1	2x2	LTE B48	20	55990	3625	2x2	23.34	23.28
CA_[2A]-46E-[48A]-66A	LTE B66	5	131997	1712.5	QPSK	1	12	66461	2112.5	2x2	LTE B2	20	900	1960	4x4	LTE B46	20	50665	5537.5	2x2	LTE B46	20	50467	5517.7	2x2	LTE B46	20	50863	5557.3	2x2	LTE B46	20	51061	5577.1	2x2	LTE B48	20	55990	3625	4x4	23.35	23.28
CA_[2A]-46E-[48A]-[66A]	LTE B66	5	131997	1712.5	QPSK	1	12	66461	2112.5	4x4	LTE B2	20	900	1960	4x4	LTE B46	20	50665	5537.5	2x2	LTE B46	20	50467	5517.7	2x2	LTE B46	20	50863	5557.3	2x2	LTE B46	20	51061	5577.1	2x2	LTE B48	20	55990	3625	4x4	23.32	23.28
CA_2A-46E-[66A]-66A	LTE B66	5	131997	1712.5	QPSK	1	12	66461	2112.5	4x4	LTE B66	20	67236	2190	2x2	LTE B2	20	900	1960	2x2	LTE B46	20	50665	5537.5	2x2	LTE B46	20	50467	5517.7	2x2	LTE B46	20	50863	5557.3	2x2	LTE B46	20	51061	5577.1	2x2	23.30	23.28
CA_2A-46E-66A-[66A]	LTE B66	5	131997	1712.5	QPSK	1	12	66461	2112.5	2x2	LTE B66	20	67236	2190	4x4	LTE B2	20	900	1960	2x2	LTE B46	20	50665	5537.5	2x2	LTE B46	20	50467	5517.7	2x2	LTE B46	20	50863	5557.3	2x2	LTE B46	20	51061	5577.1	2x2	23.28	23.28
CA_2A-46E-[66A]-[66A]	LTE B66	5	131997	1712.5	QPSK	1	12	66461	2112.5	4x4	LTE B66	20	67236	2190	4x4	LTE B2	20	900	1960	2x2	LTE B46	20	50665	5537.5	2x2	LTE B46	20	50467	5517.7	2x2	LTE B46	20	50863	5557.3	2x2	LTE B46	20	51061	5577.1	2x2	23.35	23.28
CA_[2A]-46E-66A-66A	LTE B66	5	131997	1712.5	QPSK	1	12	66461	2112.5	2x2	LTE B66	20	67236	2190	2x2	LTE B2	20	900	1960	4x4	LTE B46	20	50665	5537.5	2x2	LTE B46	20	50467	5517.7	2x2	LTE B46	20	50863	5557.3	2x2	LTE B46	20	51061	5577.1	2x2	23.31	23.28
CA_[2A]-46E-[66A]-66A	LTE B66	5	131997	1712.5	QPSK	1	12	66461	2112.5	4x4	LTE B66	20	67236	2190	2x2	LTE B2	20	900	1960	4x4	LTE B46	20	50665	5537.5	2x2	LTE B46	20	50467	5517.7	2x2	LTE B46	20	50863	5557.3	2x2	LTE B46	20	51061	5577.1	2x2	23.33	23.28
CA_[2A]-46E-66A-[66A]	LTE B66	5	131997	1712.5	QPSK	1	12	66461	2112.5	2x2	LTE B66	20	67236	2190	4x4	LTE B2	20	900	1960	4x4	LTE B46	20	50665	5537.5	2x2	LTE B46	20	50467	5517.7	2x2	LTE B46	20	50863	5557.3	2x2	LTE B46	20	51061	5577.1	2x2	23.30	23.28
CA_[2A]-46E-[66A]-[66A]	LTE B66	5	131997	1712.5	QPSK	1	12	66461	2112.5	4x4	LTE B66	20	67236	2190	4x4	LTE B2	20	900	1960	4x4	LTE B46	20	50665	5537.5	2x2	LTE B46	20	50467	5517.7	2x2	LTE B46	20	50863	5557.3	2x2	LTE B46	20	51061	5577.1	2x2	23.34	23.28
CA_5A-46E-[66A]-66A	LTE B66	5	131997	1712.5	QPSK	1	12	66461	2112.5	4x4	LTE B66	20	67236	2190	2x2	LTE B5	10	2525	881.5	2x2	LTE B46	20	50665	5537.5	2x2	LTE B46	20	50467	5517.7	2x2	LTE B46	20	50863	5557.3	2x2	LTE B46	20	51061	5577.1	2x2	23.24	23.28
CA_5A-46E-66A-[66A]	LTE B66	5	131997	1712.5	QPSK	1	12	66461	2112.5	2x2	LTE B66	20	67236	2190	4x4	LTE B5	10	2525	881.5	2x2	LTE B46	20	50665	5537.5	2x2	LTE B46	20	50467	5517.7	2x2	LTE B46	20	50863	5557.3	2x2	LTE B46	20	51061	5577.1	2x2	23.24	23.28
CA_5A-46E-[66A]-[66A]	LTE B66	5	131997	1712.5	QPSK	1	12	66461	2112.5	4x4	LTE B66	20	67236	2190	4x4	LTE B5	10	2525	881.5	2x2	LTE B46	20	50665	5537.5	2x2	LTE B46	20	50467	5517.7	2x2	LTE B46	20	50863	5557.3	2x2	LTE B46	20	51061	5577.1	2x2	23.27	23.28
CA_46C-48E-[66A]	LTE B66	5	131997	1712.5	QPSK	1	12	66461	2112.5	4x4	LTE B46	20	50665	5537.5	2x2	LTE B46	20	50467	5517.7	2x2	LTE B48	20	55990	3625	2x2	LTE B48	20	56188	3644.8	2x2	LTE B48	20	56386	3664.6	2x2	LTE B48	20	55792	3605.2	2x2	23.31	23.28
CA_46E-48C-[66A]	LTE B66	5	131997	1712.5	QPSK	1	12	66461	2112.5	4x4	LTE B46	20	50665	5537.5	2x2	LTE B46	20	50467	5517.7	2x2	LTE B46	20	50863	5557.3	2x2	LTE B46	20	50269	5497.9	2x2	LTE B48	20	55990	3625	2x2	LTE B48	20	56188	3644.8	2x2	23.38	23.28
CA_46E-[48C]-66A	LTE B66	5	131997	1712.5	QPSK	1	12	66461	2112.5	2x2	LTE B46	20	50665	5537.5	2x2	LTE B46	20	50467	5517.7	2x2	LTE B46	20	50863	5557.3	2x2	LTE B46	20	50269	5497.9	2x2	LTE B48	20	55990	3625	4x4	LTE B48	20	56188	3644.8	4x4	23.42	23.28
CA_46E-[48C]-[66A]	LTE B66	5	131997	1712.5	QPSK	1	12	66461	2112.5	4x4	LTE B46	20	50665	5537.5	2x2	LTE B46	20	50467	5517.7	2x2	LTE B46	20	50863	5557.3	2x2	LTE B46	20	50269	5497.9	2x2	LTE B48	20	55990	3625	4x4	LTE B48	20	56188	3644.8	4x4	23.35	23.28

J.3.8 LTE Band 25 as PCC

Table J-23
Maximum Output Powers

	PCC										SCC 1					Power	
Combination	PCC Band	PCC BW [MHz]	PCC (UL) Ch.	PCC (UL) Freq. [MHz]	Mod.	PCC UL# RB	PCC UL RB Offset	PCC (DL) Ch.	PCC (DL) Freq. [MHz]	DL Ant. Config.	SCC Band	SCC BW [MHz]	SCC (DL) Ch.	SCC (DL) Freq. [MHz]	DL Ant. Config.	LTE Tx.Power with DL CA Enabled	LTE Single Carrier Tx Power (dBm)
CA_5A-[25A]	LTE B25	15	26365	1882.5	QPSK	1	36	8365	1962.5	4x4	LTE B5	10	2525	881.5	2x2	23.53	23.73
CA_25A-[25A] (1)	LTE B25	15	26365	1882.5	QPSK	1	36	8365	1962.5	2x2	LTE B25	20	8140	1940	4x4	23.40	23.73
CA_[25A]-25A (1)	LTE B25	15	26365	1882.5	QPSK	1	36	8365	1962.5	4x4	LTE B25	20	8140	1940	2x2	23.48	23.73
CA_[25A]-[25A] (1)	LTE B25	15	26365	1882.5	QPSK	1	36	8365	1962.5	4x4	LTE B25	20	8140	1940	4x4	23.50	23.73

© 2021 PCTEST

J.3.9 LTE Band 30 as PCC

Table J-24
Maximum Output Powers

	PCC										SCC 1					SCC 2					SCC 3					SCC 4					Power	
Combination	PCC Band	PCC BW [MHz]	PCC (UL) Ch.	PCC (UL) Freq. [MHz]	Mod.	PCC UL# RB	PCC UL RB Offset	PCC (DL) Ch.	PCC (DL) Freq. [MHz]	DL Ant. Config.	SCC Band	SCC BW [MHz]	SCC (DL) Ch.	SCC (DL) Freq. [MHz]	DL Ant. Config.	SCC Band	SCC BW [MHz]	SCC (DL) Ch.	SCC (DL) Freq. [MHz]	DL Ant. Config.	SCC Band	SCC BW [MHz]	SCC (DL) Ch.	SCC (DL) Freq. [MHz]	DL Ant. Config.	SCC Band	SCC BW [MHz]	SCC (DL) Ch.	SCC (DL) Freq. [MHz]	DL Ant. Config.	LTE Tx.Power with DL CA Enabled	LTE Single Carrier Tx Power (dBm)
CA_2A-2A-29A-[30A]	LTE B30	5	27710	2310	QPSK	1	12	9820	2355	4x4	LTE B2	20	900	1960	2x2	LTE B2	20	700	1940	2x2	LTE B29	10	9715	722.5	2x2	-	-	-	-	-	22.36	22.36
CA_[2A]-2A-29A-30A	LTE B30	5	27710	2310	QPSK	1	12	9820	2355	2x2	LTE B2	20	900	1960	4x4	LTE B2	20	700	1940	2x2	LTE B29	10	9715	722.5	2x2	-	-	-	-	-	22.21	22.36
CA_[2A]-2A-29A-[30A]	LTE B30	5	27710	2310	QPSK	1	12	9820	2355	4x4	LTE B2	20	900	1960	4x4	LTE B2	20	700	1940	2x2	LTE B29	10	9715	722.5	2x2	-	-	-	-	-	22.29	22.36
CA_[2A]-[2A]-29A-30A	LTE B30	5	27710	2310	QPSK	1	12	9820	2355	2x2	LTE B2	20	900	1960	4x4	LTE B2	20	700	1940	4x4	LTE B29	10	9715	722.5	2x2	-	-	-	-	-	22.18	22.36
CA_[2A]-[2A]-29A-[30A]	LTE B30	5	27710	2310	QPSK	1	12	9820	2355	4x4	LTE B2	20	900	1960	4x4	LTE B2	20	700	1940	4x4	LTE B29	10	9715	722.5	2x2	-	-	-	-	-	22.32	22.36
CA_2A-29A-30A-[66A]	LTE B30	5	27710	2310	QPSK	1	12	9820	2355	2x2	LTE B2	20	900	1960	2x2	LTE B29	10	9715	722.5	2x2	LTE B66	20	66786	2145	4x4	-	-	-	-	-	22.17	22.36
CA_2A-29A-[30A]-66A	LTE B30	5	27710	2310	QPSK	1	12	9820	2355	4x4	LTE B2	20	900	1960	2x2	LTE B29	10	9715	722.5	2x2	LTE B66	20	66786	2145	2x2	-	-	-	-	-	22.31	22.36
CA_2A-29A-[30A]-[66A]	LTE B30	5	27710	2310	QPSK	1	12	9820	2355	4x4	LTE B2	20	900	1960	2x2	LTE B29	10	9715	722.5	2x2	LTE B66	20	66786	2145	4x4	-	-	-	-	-	22.35	22.36
CA_[2A]-29A-30A-66A	LTE B30	5	27710	2310	QPSK	1	12	9820	2355	2x2	LTE B2	20	900	1960	4x4	LTE B29	10	9715	722.5	2x2	LTE B66	20	66786	2145	2x2	-	-	-	-	-	22.25	22.36
CA_[2A]-29A-30A-[66A]	LTE B30	5	27710	2310	QPSK	1	12	9820	2355	2x2	LTE B2	20	900	1960	4x4	LTE B29	10	9715	722.5	2x2	LTE B66	20	66786	2145	4x4	-	-	-	-	-	22.16	22.36
CA_[2A]-29A-[30A]-66A	LTE B30	5	27710	2310	QPSK	1	12	9820	2355	4x4	LTE B2	20	900	1960	4x4	LTE B29	10	9715	722.5	2x2	LTE B66	20	66786	2145	2x2	-	-	-	-	-	22.33	22.36
CA_[2A]-29A-[30A]-[66A]	LTE B30	5	27710	2310	QPSK	1	12	9820	2355	4x4	LTE B2	20	900	1960	4x4	LTE B29	10	9715	722.5	2x2	LTE B66	20	66786	2145	4x4	-	-	-	-	-	22.34	22.36
CA_29A-30A-[66A]-66A	LTE B30	5	27710	2310	QPSK	1	12	9820	2355	2x2	LTE B29	10	9715	722.5	2x2	LTE B66	20	66786	2145	4x4	LTE B66	20	67236	2190	2x2	-	-	-	-	-	22.21	22.36
CA_29A-30A-[66A]-[66A]	LTE B30	5	27710	2310	QPSK	1	12	9820	2355	2x2	LTE B29	10	9715	722.5	2x2	LTE B66	20	66786	2145	4x4	LTE B66	20	67236	2190	4x4	-	-	-	-	-	22.24	22.36
CA_29A-[30A]-66A-66A	LTE B30	5	27710	2310	QPSK	1	12	9820	2355	4x4	LTE B29	10	9715	722.5	2x2	LTE B66	20	66786	2145	2x2	LTE B66	20	67236	2190	2x2	-	-	-	-	-	22.46	22.36
CA_29A-[30A]-[66A]-66A	LTE B30	5	27710	2310	QPSK	1	12	9820	2355	4x4	LTE B29	10	9715	722.5	2x2	LTE B66	20	66786	2145	4x4	LTE B66	20	67236	2190	2x2	-	-	-	-	-	22.42	22.36
CA_29A-[30A]-[66A]-[66A]	LTE B30	5	27710	2310	QPSK	1	12	9820	2355	4x4	LTE B29	10	9715	722.5	2x2	LTE B66	20	66786	2145	4x4	LTE B66	20	67236	2190	4x4	-	-	-	-	-	22.29	22.36
CA_2A-2A-5A-30A-[66A]	LTE B30	5	27710	2310	QPSK	1	12	9820	2355	2x2	LTE B2	20	900	1960	2x2	LTE B2	20	700	1940	2x2	LTE B5	10	2525	881.5	2x2	LTE B66	20	66786	2145	4x4	22.36	22.36
CA_2A-2A-5A-[30A]-66A	LTE B30	5	27710	2310	QPSK	1	12	9820	2355	4x4	LTE B2	20	900	1960	2x2	LTE B2	20	700	1940	2x2	LTE B5	10	2525	881.5	2x2	LTE B66	20	66786	2145	2x2	22.53	22.36
CA_2A-2A-5A-[30A]-[66A]	LTE B30	5	27710	2310	QPSK	1	12	9820	2355	4x4	LTE B2	20	900	1960	2x2	LTE B2	20	700	1940	2x2	LTE B5	10	2525	881.5	2x2	LTE B66	20	66786	2145	4x4	22.48	22.36
CA_[2A]-2A-5A-30A-66A	LTE B30	5	27710	2310	QPSK	1	12	9820	2355	2x2	LTE B2	20	900	1960	4x4	LTE B2	20	700	1940	2x2	LTE B5	10	2525	881.5	2x2	LTE B66	20	66786	2145	2x2	22.37	22.36
CA_[2A]-2A-5A-30A-[66A]	LTE B30	5	27710	2310	QPSK	1	12	9820	2355	2x2	LTE B2	20	900	1960	4x4	LTE B2	20	700	1940	2x2	LTE B5	10	2525	881.5	2x2	LTE B66	20	66786	2145	4x4	22.39	22.36
CA_[2A]-2A-5A-[30A]-66A	LTE B30	5	27710	2310	QPSK	1	12	9820	2355	4x4	LTE B2	20	900	1960	4x4	LTE B2	20	700	1940	2x2	LTE B5	10	2525	881.5	2x2	LTE B66	20	66786	2145	2x2	22.45	22.36
CA_[2A]-2A-5A-[30A]-[66A]	LTE B30	5	27710	2310	QPSK	1	12	9820	2355	4x4	LTE B2	20	900	1960	4x4	LTE B2	20	700	1940	2x2	LTE B5	10	2525	881.5	2x2	LTE B66	20	66786	2145	4x4	22.25	22.36
CA_[2A]-[2A]-5A-30A-66A	LTE B30	5	27710	2310	QPSK	1	12	9820	2355	2x2	LTE B2	20	900	1960	4x4	LTE B2	20	700	1940	4x4	LTE B5	10	2525	881.5	2x2	LTE B66	20	66786	2145	2x2	22.23	22.36
CA_[2A]-[2A]-5A-30A-[66A]	LTE B30	5	27710	2310	QPSK	1	12	9820	2355	2x2	LTE B2	20	900	1960	4x4	LTE B2	20	700	1940	4x4	LTE B5	10	2525	881.5	2x2	LTE B66	20	66786	2145	4x4	22.23	22.36
CA_[2A]-[2A]-5A-[30A]-66A	LTE B30	5	27710	2310	QPSK	1	12	9820	2355	4x4	LTE B2	20	900	1960	4x4	LTE B2	20	700	1940	4x4	LTE B5	10	2525	881.5	2x2	LTE B66	20	66786	2145	2x2	22.30	22.36
CA_[2A]-[2A]-5A-[30A]-[66A]	LTE B30	5	27710	2310	QPSK	1	12	9820	2355	4x4	LTE B2	20	900	1960	4x4	LTE B2	20	700	1940	4x4	LTE B5	10	2525	881.5	2x2	LTE B66	20	66786	2145	4x4	22.32	22.36
CA_2A-2A-12A-30A-[66A]	LTE B30	5	27710	2310	QPSK	1	12	9820	2355	2x2	LTE B2	20	900	1960	2x2	LTE B2	20	700	1940	2x2	LTE B12	10	5095	737.5	2x2	LTE B66	20	66786	2145	4x4	22.36	22.36
CA_2A-2A-12A-[30A]-66A	LTE B30	5	27710	2310	QPSK	1	12	9820	2355	4x4	LTE B2	20	900	1960	2x2	LTE B2	20	700	1940	2x2	LTE B12	10	5095	737.5	2x2	LTE B66	20	66786	2145	2x2	22.43	22.36
CA_2A-2A-12A-[30A]-[66A]	LTE B30	5	27710	2310	QPSK	1	12	9820	2355	4x4	LTE B2	20	900	1960	2x2	LTE B2	20	700	1940	2x2	LTE B12	10	5095	737.5	2x2	LTE B66	20	66786	2145	4x4	22.34	22.36
CA_[2A]-2A-12A-30A-66A	LTE B30	5	27710	2310	QPSK	1	12	9820	2355	2x2	LTE B2	20	900	1960	4x4	LTE B2	20	700	1940	2x2	LTE B12	10	5095	737.5	2x2	LTE B66	20	66786	2145	2x2	22.27	22.36
CA_[2A]-2A-12A-30A-[66A]	LTE B30	5	27710	2310	QPSK	1	12	9820	2355	2x2	LTE B2	20	900	1960	4x4	LTE B2	20	700	1940	2x2	LTE B12	10	5095	737.5	2x2	LTE B66	20	66786	2145	4x4	22.25	22.36
CA_[2A]-2A-12A-[30A]-66A	LTE B30	5	27710	2310	QPSK	1	12	9820	2355	4x4	LTE B2	20	900	1960	4x4	LTE B2	20	700	1940	2x2	LTE B12	10	5095	737.5	2x2	LTE B66	20	66786	2145	2x2	22.31	22.36
CA_[2A]-2A-12A-[30A]-[66A]	LTE B30	5	27710	2310	QPSK	1	12	9820	2355	4x4	LTE B2	20	900	1960	4x4	LTE B2	20	700	1940	2x2	LTE B12	10	5095	737.5	2x2	LTE B66	20	66786	2145	4x4	22.35	22.36
CA_[2A]-[2A]-12A-30A-66A	LTE B30	5	27710	2310	QPSK	1	12	9820	2355	2x2	LTE B2	20	900	1960	4x4	LTE B2	20	700	1940	4x4	LTE B12	10	5095	737.5	2x2	LTE B66	20	66786	2145	2x2	22.38	22.36
CA_[2A]-[2A]-12A-30A-[66A]	LTE B30	5	27710	2310	QPSK	1	12	9820	2355	2x2	LTE B2	20	900	1960	4x4	LTE B2	20	700	1940	4x4	LTE B12	10	5095	737.5	2x2	LTE B66	20	66786	2145	4x4	22.33	22.36
CA_[2A]-[2A]-12A-[30A]-66A	LTE B30	5	27710	2310	QPSK	1	12	9820	2355	4x4	LTE B2	20	900	1960	4x4	LTE B2	20	700	1940	4x4	LTE B12	10	5095	737.5	2x2	LTE B66	20	66786	2145	2x2	22.32	22.36
CA_[2A]-[2A]-12A-[30A]-[66A]	LTE B30	5	27710	2310	QPSK	1	12	9820	2355	4x4	LTE B2	20	900	1960	4x4	LTE B2	20	700	1940	4x4	LTE B12	10	5095	737.5	2x2	LTE B66	20	66786	2145	4x4	22.47	22.36
CA_2A-2A-14A-30A-[66A]	LTE B30	5	27710	2310	QPSK	1	12	9820	2355	2x2	LTE B2	20	900	1960	2x2	LTE B2	20	700	1940	2x2	LTE B14	10	5330	763	2x2	LTE B66	20	66786	2145	4x4	22.39	22.36
CA_2A-2A-14A-[30A]-66A	LTE B30	5	27710	2310	QPSK	1	12	9820	2355	4x4	LTE B2	20	900	1960	2x2	LTE B2	20	700	1940	2x2	LTE B14	10	5330	763	2x2	LTE B66	20	66786	2145	2x2	22.34	22.36
CA_2A-2A-14A-[30A]-[66A]	LTE B30	5	27710	2310	QPSK	1	12	9820	2355	4x4	LTE B2	20	900	1960	2x2	LTE B2	20	700	1940	2x2	LTE B14	10	5330	763	2x2	LTE B66	20	66786	2145	4x4	22.38	22.36
CA_[2A]-2A-14A-30A-66A	LTE B30	5	27710	2310	QPSK	1	12	9820	2355	2x2	LTE B2	20	900	1960	4x4	LTE B2	20	700	1940	2x2	LTE B14	10	5330	763	2x2	LTE B66	20	66786	2145	2x2	22.32	22.36
CA_[2A]-2A-14A-30A-[66A]	LTE B30	5	27710	2310	QPSK	1	12	9820	2355	2x2	LTE B2	20	900	1960	4x4	LTE B2	20	700	1940	2x2	LTE B14	10	5330	763	2x2	LTE B66	20	66786	2145	4x4	22.26	22.36
CA_[2A]-2A-14A-[30A]-66A	LTE B30	5	27710	2310	QPSK	1	12	9820	2355	4x4	LTE B2	20	900	1960	4x4	LTE B2	20	700	1940	2x2	LTE B14	10	5330	763	2x2	LTE B66	20	66786	2145	2x2	22.28	22.36
CA_[2A]-2A-14A-[30A]-[66A]	LTE B30	5	27710	2310	QPSK	1	12	9820	2355	4x4	LTE B2	20	900	1960	4x4	LTE B2	20	700	1940	2x2	LTE B14	10	5330	763	2x2	LTE B66	20	66786	2145	4x4	22.39	22.36
CA_[2A]-[2A]-14A-30A-66A	LTE B30	5	27710	2310	QPSK	1	12	9820	2355	2x2	LTE B2	20	900	1960	4x4	LTE B2	20	700	1940	4x4	LTE B14	10	5330	763	2x2	LTE B66	20	66786	2145	2x2	22.40	22.36
CA_[2A]-[2A]-14A-30A-[66A]	LTE B30	5	27710	2310	QPSK	1	12	9820	2355	2x2	LTE B2	20	900	1960	4x4	LTE B2	20	700	1940	4x4	LTE B14	10	5330	763	2x2	LTE B66	20	66786	2145	4x4	22.35	22.36
CA_[2A]-[2A]-14A-[30A]-66A	LTE B30	5	27710	2310	QPSK	1	12	9820	2355	4x4	LTE B2	20	900	1960	4x4	LTE B2	20	700	1940	4x4	LTE B14	10	5330	763	2x2	LTE B66	20	66786	2145	2x2	22.50	22.36
CA_[2A]-[2A]-14A-[30A]-[66A]	LTE B30	5	27710	2310	QPSK	1	12	9820	2355	4x4	LTE B2	20	900	1960	4x4	LTE B2	20	700	1940	4x4	LTE B14	10	5330	763	2x2	LTE B66	20	66786	2145	4x4	22.49	22.36
CA_2A-5A-30A-[66A]-66A	LTE B30	5	27710	2310	QPSK	1	12	9820	2355	2x2	LTE B2	20	900	1960	2x2	LTE B5	10	2525	881.5	2x2	LTE B66	20	66786	2145	4x4	LTE B66	20	67236	2190	2x2	22.48	22.36
CA_2A-5A-30A-[66A]-[66A]	LTE B30	5	27710	2310	QPSK	1	12	9820	2355	2x2	LTE B2	20	900	1960	2x2	LTE B5	10	2525	881.5	2x2	LTE B66	20	66786	2145	4x4	LTE B66	20	67236	2190	4x4	22.36	22.36
CA_2A-5A-[30A]-66A-66A	LTE B30	5	27710	2310	QPSK	1	12	9820	2355	4x4	LTE B2	20	900	1960	2x2	LTE B5	10	2525	881.5	2x2	LTE B66	20	66786	2145	2x2	LTE B66	20	67236	2190	2x2	22.41	22.36
CA_2A-5A-[30A]-[66A]-66A	LTE B30	5	27710	2310	QPSK	1	12	9820	2355	4x4	LTE B2	20	900	1960	2x2	LTE B5	10	2525	881.5	2x2	LTE B66	20	66786	2145	4x4	LTE B66	20	67236	2190	2x2	22.40	22.36
CA_2A-5A-[30A]-[66A]-[66A]	LTE B30	5	27710	2310	QPSK	1	12	9820	2355	4x4	LTE B2	20	900	1960	2x2	LTE B5	10	2525	881.5	2x2	LTE B66	20	66786	2145	4x4	LTE B66	20	67236	2190	4x4	22.46	22.36
CA_[2A]-5A-30A-66A-66A	LTE B30	5	27710	2310	QPSK	1	12	9820	2355	2x2	LTE B2	20	900	1960	4x4	LTE B5	10	2525	881.5	2x2	LTE B66	20	66786	2145	2x2	LTE B66	20	67236	2190	2x2	22.26	22.36
CA_[2A]-5A-30A-[66A]-66A	LTE B30	5	27710	2310	QPSK	1	12	9820	2355	2x2	LTE B2	20	900	1960	4x4	LTE B5	10	2525	881.5	2x2	LTE B66	20	66786	2145	4x4	LTE B66	20	67236	2190	2x2	22.31	22.36
CA_[2A]-5A-30A-[66A]-[66A]	LTE B30	5	27710	2310	QPSK	1	12	9820	2355	2x2	LTE B2	20	900	1960	4x4	LTE B5	10	2525	881.5	2x2	LTE B66	20	66786	2145	4x4	LTE B66	20	67236	2190	4x4	22.35	22.36
CA_[2A]-5A-[30A]-66A-66A	LTE B30	5	27710	2310	QPSK	1	12	9820	2355	4x4	LTE B2	20	900	1960	4x4	LTE B5	10	2525	881.5	2x2	LTE B66	20	66786	2145	2x2	LTE B66	20	67236	2190	2x2	22.34	22.36
CA_[2A]-5A-[30A]-[66A]-66A	LTE B30	5	27710	2310	QPSK	1	12	9820	2355	4x4	LTE B2	20	900	1960	4x4	LTE B5	10	2525	881.5	2x2	LTE B66	20	66786	2145	4x4	LTE B66	20	67236	2190	2x2	22.26	22.36
CA_[2A]-5A-[30A]-[66A]-[66A]	LTE B30	5	27710	2310	QPSK	1	12	9820	2355	4x4	LTE B2	20	900	1960	4x4	LTE B5	10	2525	881.5	2x2	LTE B66	20	66786	2145	4x4	LTE B66	20	67236	2190	4x4	22.35	22.36
CA_2A-5B-30A-[66A]	LTE B30	5	27710	2310	QPSK	1	12	9820	2355	2x2	LTE B2	20	900	1960	2x2	LTE B5	10	2525	881.5	2x2	LTE B5	5	2453	874.3	2x2	LTE B66	20	66786	2145	4x4	22.33	22.36
CA_2A-5B-[30A]-66A	LTE B30	5	27710	2310	QPSK	1	12	9820	2355	4x4	LTE B2	20	900	1960	2x2	LTE B5	10	2525	881.5	2x2	LTE B5	5	2453	874.3	2x2	LTE B66	20	66786	2145	2x2	22.36	22.36
CA_2A-5B-[30A]-[66A]	LTE B30	5	27710	2310	QPSK	1	12	9820	2355	4x4	LTE B2	20	900	1960	2x2	LTE B5	10	2525	881.5	2x2	LTE B5	5	2453	874.3	2x2	LTE B66	20	66786	2145	4x4	22.40	22.36
CA_[2A]-5B-30A-66A	LTE B30	5	27710	2310	QPSK	1	12	9820	2355	2x2	LTE B2	20	900	1960	4x4	LTE B5	10	2525	881.5	2x2	LTE B5	5	2453	874.3	2x2	LTE B66	20	66786	2145	2x2	22.37	22.36
CA_[2A]-5B-30A-[66A]	LTE B30	5	27710	2310	QPSK	1	12	9820	2355	2x2	LTE B2	20	900	1960	4x4	LTE B5	10	2525	881.5	2x2	LTE B5	5	2453	874.3	2x2	LTE B66	20	66786	2145	4x4	22.31	22.36
CA_[2A]-5B-[30A]-66A	LTE B30	5	27710	2310	QPSK	1	12	9820	2355	4x4	LTE B2	20	900	1960	4x4	LTE B5	10	2525	881.5	2x2	LTE B5	5	2453	874.3	2x2	LTE B66	20	66786	2145	2x2	21.87	22.36
CA_[2A]-5B-[30A]-[66A]	LTE B30	5	27710	2310	QPSK	1	12	9820	2355	4x4	LTE B2	20	900	1960	4x4	LTE B5	10	2525	881.5	2x2	LTE B5	5	2453	874.3	2x2	LTE B66	20	66786	2145	4x4	22.38	22.36
CA_2A-12A-30A-[66A]-66A	LTE B30	5	27710	2310	QPSK	1	12	9820	2355	2x2	LTE B2	20	900	1960	2x2	LTE B12	10	5095	737.5	2x2	LTE B66	20	66786	2145	4x4	LTE B66	20	67236	2190	2x2	22.27	22.36
CA_2A-12A-30A-[66A]-[66A]	LTE B30	5	27710	2310	QPSK	1	12	9820	2355	2x2	LTE B2	20	900	1960	2x2	LTE B12	10	5095	737.5	2x2	LTE B66	20	66786	2145	4x4	LTE B66	20	67236	2190	4x4	22.40	22.36
CA_2A-12A-[30A]-66A-66A	LTE B30	5	27710	2310	QPSK	1	12	9820	2355	4x4	LTE B2	20	900	1960	2x2	LTE B12	10	5095	737.5	2x2	LTE B66	20	66786	2145	2x2	LTE B66	20	67236	2190	2x2	22.49	22.36
CA_2A-12A-[30A]-[66A]-66A	LTE B30	5	27710	2310	QPSK	1	12	9820	2355	4x4	LTE B2	20	900	1960	2x2	LTE B12	10	5095	737.5	2x2	LTE B66	20	66786	2145	4x4	LTE B66	20	67236	2190	2x2	22.48	22.36
CA_2A-12A-[30A]-[66A]-[66A]	LTE B30	5	27710	2310	QPSK	1	12	9820	2355	4x4	LTE B2	20	900	1960	2x2	LTE B12	10	5095	737.5	2x2	LTE B66	20	66786	2145	4x4	LTE B66	20	67236	2190	4x4	22.41	22.36
CA_[2A]-12A-30A-66A-66A	LTE B30	5	27710	2310	QPSK	1	12	9820	2355	2x2	LTE B2	20	900	1960	4x4	LTE B12	10	5095	737.5	2x2	LTE B66	20	66786	2145	2x2	LTE B66	20	67236	2190	2x2	22.40	22.36
CA_[2A]-12A-30A-[66A]-66A	LTE B30	5	27710	2310	QPSK	1	12	9820	2355	2x2	LTE B2	20	900	1960	4x4	LTE B12	10	5095	737.5	2x2	LTE B66	20	66786	2145	4x4	LTE B66	20	67236	2190	2x2	22.24	22.36
CA_[2A]-12A-30A-[66A]-[66A]	LTE B30	5	27710	2310	QPSK	1	12	9820	2355	2x2	LTE B2	20	900	1960	4x4	LTE B12	10	5095	737.5	2x2	LTE B66	20	66786	2145	4x4	LTE B66	20	67236	2190	4x4	22.35	22.36
CA_[2A]-12A-[30A]-66A-66A	LTE B30	5	27710	2310	QPSK	1	12	9820	2355	4x4	LTE B2	20	900	1960	4x4	LTE B12	10	5095	737.5	2x2	LTE B66	20	66786	2145	2x2	LTE B66	20	67236	2190	2x2	22.26	22.36
CA_[2A]-12A-[30A]-[66A]-66A	LTE B30	5	27710	2310	QPSK	1	12	9820	2355	4x4	LTE B2	20	900	1960	4x4	LTE B12	10	5095	737.5	2x2	LTE B66	20	66786	2145	4x4	LTE B66	20	67236	2190	2x2	22.25	22.36
CA_[2A]-12A-[30A]-[66A]-[66A]	LTE B30	5	27710	2310	QPSK	1	12	9820	2355	4x4	LTE B2	20	900	1960	4x4	LTE B12	10	5095	737.5	2x2	LTE B66	20	66786	2145	4x4	LTE B66	20	67236	2190	4x4	22.29	22.36
CA_2A-14A-30A-[66A]-66A	LTE B30	5	27710	2310	QPSK	1	12	9820	2355	2x2	LTE B2	20	900	1960	2x2	LTE B14	10	5330	763	2x2	LTE B66	20	66786	2145	4x4	LTE B66	20	67236	2190	2x2	22.33	22.36
CA_2A-14A-30A-[66A]-[66A]	LTE B30	5	27710	2310	QPSK	1	12	9820	2355	2x2	LTE B2	20	900	1960	2x2	LTE B14	10	5330	763	2x2	LTE B66	20	66786	2145	4x4	LTE B66	20	67236	2190	4x4	22.31	22.36
CA_2A-14A-[30A]-66A-66A	LTE B30	5	27710	2310	QPSK	1	12	9820	2355	4x4	LTE B2	20	900	1960	2x2	LTE B14	10	5330	763	2x2	LTE B66	20	66786	2145	2x2	LTE B66	20	67236	2190	2x2	22.32	22.36
CA_2A-14A-[30A]-[66A]-66A	LTE B30	5	27710	2310	QPSK	1	12	9820	2355	4x4	LTE B2	20	900	1960	2x2	LTE B14	10	5330	763	2x2	LTE B66	20	66786	2145	4x4	LTE B66	20	67236	2190	2x2	22.27	22.36
CA_2A-14A-[30A]-[66A]-[66A]	LTE B30	5	27710	2310	QPSK	1	12	9820	2355	4x4	LTE B2	20	900	1960	2x2	LTE B14	10	5330	763	2x2	LTE B66	20	66786	2145	4x4	LTE B66	20	67236	2190	4x4	22.24	22.36
CA_[2A]-14A-30A-66A-66A	LTE B30	5	27710	2310	QPSK	1	12	9820	2355	2x2	LTE B2	20	900	1960	4x4	LTE B14	10	5330	763	2x2	LTE B66	20	66786	2145	2x2	LTE B66	20	67236	2190	2x2	22.43	22.36
CA_[2A]-14A-30A-[66A]-66A	LTE B30	5	27710	2310	QPSK	1	12	9820	2355	2x2	LTE B2	20	900	1960	4x4	LTE B14	10	5330	763	2x2	LTE B66	20	66786	2145	4x4	LTE B66	20	67236	2190	2x2	22.30	22.36
CA_[2A]-14A-30A-[66A]-[66A]	LTE B30	5	27710	2310	QPSK	1	12	9820	2355	2x2	LTE B2	20	900	1960	4x4	LTE B14	10	5330	763	2x2	LTE B66	20	66786	2145	4x4	LTE B66	20	67236	2190	4x4	22.07	22.36
CA_[2A]-14A-[30A]-66A-66A	LTE B30	5	27710	2310	QPSK	1	12	9820	2355	4x4	LTE B2	20	900	1960	4x4	LTE B14	10	5330	763	2x2	LTE B66	20	66786	2145	2x2	LTE B66	20	67236	2190	2x2	22.32	22.36
CA_[2A]-14A-[30A]-[66A]-66A	LTE B30	5	27710	2310	QPSK	1	12	9820	2355	4x4	LTE B2	20	900	1960	4x4	LTE B14	10	5330	763	2x2	LTE B66	20	66786	2145	4x4	LTE B66	20	67236	2190	2x2	22.31	22.36
CA_[2A]-14A-[30A]-[66A]-[66A]	LTE B30	5	27710	2310	QPSK	1	12	9820	2355	4x4	LTE B2	20	900	1960	4x4	LTE B14	10	5330	763	2x2	LTE B66	20	66786	2145	4x4	LTE B66	20	67236	2190	4x4	22.24	22.36
CA_5B-30A-[66A]-66A	LTE B30	5	27710	2310	QPSK	1	12	9820	2355	2x2	LTE B5	10	2525	881.5	2x2	LTE B5	5	2453	874.3	2x2	LTE B66	20	66786	2145	4x4	LTE B66	20	67236	2190	2x2	22.26	22.36
CA_5B-30A-[66A]-[66A]	LTE B30	5	27710	2310	QPSK	1	12	9820	2355	2x2	LTE B5	10	2525	881.5	2x2	LTE B5	5	2453	874.3	2x2	LTE B66	20	66786	2145	4x4	LTE B66	20	67236	2190	4x4	22.31	22.36
CA_5B-[30A]-66A-66A	LTE B30	5	27710	2310	QPSK	1	12	9820	2355	4x4	LTE B5	10	2525	881.5	2x2	LTE B5	5	2453	874.3	2x2	LTE B66	20	66786	2145	2x2	LTE B66	20	67236	2190	2x2	22.32	22.36
CA_5B-[30A]-[66A]-66A	LTE B30	5	27710	2310	QPSK	1	12	9820	2355	4x4	LTE B5	10	2525	881.5	2x2	LTE B5	5	2453	874.3	2x2	LTE B66	20	66786	2145	4x4	LTE B66	20	67236	2190	2x2	22.25	22.36
CA_5B-[30A]-[66A]-[66A]	LTE B30	5	27710	2310	QPSK	1	12	9820	2355	4x4	LTE B5	10	2525	881.5	2x2	LTE B5	5	2453	874.3	2x2	LTE B66	20	66786	2145	4x4	LTE B66	20	67236	2190	4x4	22.28	22.36

J.3.10 LTE Band 41 as PCC

Table J-25
Maximum Output Powers

	PCC										SCC 1					SCC 2					Power	
Combination	PCC Band	PCC BW [MHz]	PCC (UL) Ch.	PCC (UL) Freq. [MHz]	Mod.	PCC UL# RB	PCC UL RB Offset	PCC (DL) Ch.	PCC (DL) Freq. [MHz]	DL Ant. Config.	SCC Band	SCC BW [MHz]	SCC (DL) Ch.	SCC (DL) Freq. [MHz]	DL Ant. Config.	SCC Band	SCC BW [MHz]	SCC (DL) Ch.	SCC (DL) Freq. [MHz]	DL Ant. Config.	LTE Tx.Power with DL CA Enabled	LTE Single Carrier Tx Power (dBm)
CA_[41C] (1)	LTE B41	10	40620	2593	QPSK	1	25	40620	2593	4x4	LTE B41	20	40764	2607.4	4x4	-	-	-	-	-	23.93	23.98
CA_[41D]	LTE B41	10	40620	2593	QPSK	1	25	40620	2593	4x4	LTE B41	20	40476	2578.6	4x4	LTE B41	20	40764	2607.4	4x4	23.94	23.98

© 2021 PCTEST

J.3.11 LTE Band 48 as PCC

Table J-26
Maximum Output Powers

	PCC										SCC 1										SCC 2										SCC 3										SCC 4						Power	
Combination	PCC Band	PCC BW [MHz]	PCC (UL) Ch.	PCC (UL) Freq. [MHz]	Mod.	PCC UL# RB	PCC UL RB Offset	PCC (DL) Ch.	PCC (DL) Freq. [MHz]	DL Ant. Config.	SCC Band	SCC BW [MHz]	SCC (DL) Ch.	SCC (DL) Freq. [MHz]	DL Ant. Config.	SCC Band	SCC BW [MHz]	SCC (DL) Ch.	SCC (DL) Freq. [MHz]	DL Ant. Config.	SCC Band	SCC BW [MHz]	SCC (DL) Ch.	SCC (DL) Freq. [MHz]	DL Ant. Config.	SCC Band	SCC BW [MHz]	SCC (DL) Ch.	SCC (DL) Freq. [MHz]	DL Ant. Config.	SCC Band	SCC BW [MHz]	SCC (DL) Ch.	SCC (DL) Freq. [MHz]	DL Ant. Config.	LTE Tx.Power with DL CA Enabled	LTE Single Carrier Tx Power (dBm)
CA_48A-[48A]	LTE B48	10	55290	3555	16QAM	1	25	55290	3555	2x2	LTE B48	20	56640	3690	4x4	-	-	-	-	-	-	-	-	-	-	-	-	-	-	-	-	-	-	-	-	21.34	21.40
CA_[48A]-48A	LTE B48	10	55290	3555	16QAM	1	25	55290	3555	4x4	LTE B48	20	56640	3690	2x2	-	-	-	-	-	-	-	-	-	-	-	-	-	-	-	-	-	-	-	-	21.33	21.40
CA_[48A]-[48A]	LTE B48	10	55290	3555	16QAM	1	25	55290	3555	4x4	LTE B48	20	56640	3690	4x4	-	-	-	-	-	-	-	-	-	-	-	-	-	-	-	-	-	-	-	-	21.38	21.40
CA_48A-[48C]	LTE B48	10	55290	3555	16QAM	1	25	55290	3555	2x2	LTE B48	20	56640	3690	4x4	LTE B48	20	56442	3670.2	4x4	-	-	-	-	-	-	-	-	-	-	-	-	-	-	-	21.38	21.40
CA_[48C]-48A	LTE B48	10	55290	3555	16QAM	1	25	55290	3555	4x4	LTE B48	20	55434	3569.4	4x4	LTE B48	20	56640	3690	2x2	-	-	-	-	-	-	-	-	-	-	-	-	-	-	-	21.42	21.40
CA_[48A]-48C	LTE B48	10	55290	3555	16QAM	1	25	55290	3555	4x4	LTE B48	20	56640	3690	2x2	LTE B48	20	56442	3670.2	2x2	-	-	-	-	-	-	-	-	-	-	-	-	-	-	-	21.33	21.40
CA_48C-[48A]	LTE B48	10	55290	3555	16QAM	1	25	55290	3555	2x2	LTE B48	20	55434	3569.4	2x2	LTE B48	20	56640	3690	4x4	-	-	-	-	-	-	-	-	-	-	-	-	-	-	-	21.36	21.40
CA_[48A]-[48C]	LTE B48	10	55290	3555	16QAM	1	25	55290	3555	4x4	LTE B48	20	56640	3690	4x4	LTE B48	20	56442	3670.2	4x4	-	-	-	-	-	-	-	-	-	-	-	-	-	-	-	21.33	21.40
CA_48A-[48D]	LTE B48	10	55290	3555	16QAM	1	25	55290	3555	2x2	LTE B48	20	56640	3690	4x4	LTE B48	20	56442	3670.2	4x4	LTE B48	20	56244	3650.4	4x4	-	-	-	-	-	-	-	-	-	-	21.31	21.40
CA_[48D]-48A	LTE B48	10	55290	3555	16QAM	1	25	55290	3555	4x4	LTE B48	20	55434	3569.4	4x4	LTE B48	20	55632	3589.2	4x4	LTE B48	20	56640	3690	2x2	-	-	-	-	-	-	-	-	-	-	21.34	21.40
CA_[48A]-48D	LTE B48	10	55290	3555	16QAM	1	25	55290	3555	4x4	LTE B48	20	56640	3690	2x2	LTE B48	20	56442	3670.2	2x2	LTE B48	20	56244	3650.4	2x2	-	-	-	-	-	-	-	-	-	-	21.35	21.40
CA_48D-[48A]	LTE B48	10	55290	3555	16QAM	1	25	55290	3555	2x2	LTE B48	20	55434	3569.4	2x2	LTE B48	20	55632	3589.2	2x2	LTE B48	20	56640	3690	4x4	-	-	-	-	-	-	-	-	-	-	21.27	21.40
CA_[48A]-[48D]	LTE B48	10	55290	3555	16QAM	1	25	55290	3555	4x4	LTE B48	20	56640	3690	4x4	LTE B48	20	56442	3670.2	4x4	LTE B48	20	56244	3650.4	4x4	-	-	-	-	-	-	-	-	-	-	21.34	21.40
CA_[48D]-[48A]	LTE B48	10	55290	3555	16QAM	1	25	55290	3555	4x4	LTE B48	20	55434	3569.4	4x4	LTE B48	20	55632	3589.2	4x4	LTE B48	20	56640	3690	4x4	-	-	-	-	-	-	-	-	-	-	21.35	21.40
CA_48C-[48C]	LTE B48	10	55290	3555	16QAM	1	25	55290	3555	2x2	LTE B48	20	55434	3569.4	2x2	LTE B48	20	56640	3690	4x4	LTE B48	20	56442	3670.2	4x4	-	-	-	-	-	-	-	-	-	-	21.29	21.40
CA_[48C]-48C	LTE B48	10	55290	3555	16QAM	1	25	55290	3555	4x4	LTE B48	20	55434	3569.4	4x4	LTE B48	20	56640	3690	2x2	LTE B48	20	56442	3670.2	2x2	-	-	-	-	-	-	-	-	-	-	21.37	21.40
CA_[48C]-[48C]	LTE B48	10	55290	3555	16QAM	1	25	55290	3555	4x4	LTE B48	20	55434	3569.4	4x4	LTE B48	20	56640	3690	4x4	LTE B48	20	56442	3670.2	4x4	-	-	-	-	-	-	-	-	-	-	21.36	21.40
CA_48A-[48E]	LTE B48	10	55290	3555	16QAM	1	25	55290	3555	2x2	LTE B48	20	56640	3690	4x4	LTE B48	20	56442	3670.2	4x4	LTE B48	20	56244	3650.4	4x4	LTE B48	20	56046	3630.6	4x4						21.32	21.40
CA_[48E]-48A	LTE B48	10	55290	3555	16QAM	1	25	55290	3555	4x4	LTE B48	20	55434	3569.4	4x4	LTE B48	20	55632	3589.2	4x4	LTE B48	20	55884	3614.4	4x4	LTE B48	20	56640	3690	2x2						21.33	21.40
CA_[48A]-48E	LTE B48	10	55290	3555	16QAM	1	25	55290	3555	4x4	LTE B48	20	56640	3690	2x2	LTE B48	20	56442	3670.2	2x2	LTE B48	20	56244	3650.4	2x2	LTE B48	20	56046	3630.6	2x2						21.28	21.40
CA_48E-[48A]	LTE B48	10	55290	3555	16QAM	1	25	55290	3555	2x2	LTE B48	20	55434	3569.4	2x2	LTE B48	20	55632	3589.2	2x2	LTE B48	20	55884	3614.4	2x2	LTE B48	20	56640	3690	4x4						21.31	21.40
CA_[48A]-[48E]	LTE B48	10	55290	3555	16QAM	1	25	55290	3555	4x4	LTE B48	20	56640	3690	4x4	LTE B48	20	56442	3670.2	4x4	LTE B48	20	56244	3650.4	4x4	LTE B48	20	56046	3630.6	4x4						21.33	21.40
CA_[48E]-[48A]	LTE B48	10	55290	3555	16QAM	1	25	55290	3555	4x4	LTE B48	20	55434	3569.4	4x4	LTE B48	20	55632	3589.2	4x4	LTE B48	20	55884	3614.4	4x4	LTE B48	20	56640	3690	4x4						21.32	21.40
CA_48C-[48D]	LTE B48	10	55290	3555	16QAM	1	25	55290	3555	2x2	LTE B48	20	55434	3569.4	2x2	LTE B48	20	56640	3690	4x4	LTE B48	20	56442	3670.2	4x4	LTE B48	20	56244	3650.4	4x4						21.29	21.40
CA_[48D]-48C	LTE B48	10	55290	3555	16QAM	1	25	55290	3555	4x4	LTE B48	20	55434	3569.4	4x4	LTE B48	20	55632	3589.2	4x4	LTE B48	20	56640	3690	2x2	LTE B48	20	56442	3670.2	2x2						21.27	21.40
CA_[48C]-48D	LTE B48	10	55290	3555	16QAM	1	25	55290	3555	4x4	LTE B48	20	55434	3569.4	4x4	LTE B48	20	56640	3690	2x2	LTE B48	20	56442	3670.2	2x2	LTE B48	20	56244	3650.4	2x2						21.32	21.40
CA_48D-[48C]	LTE B48	10	55290	3555	16QAM	1	25	55290	3555	2x2	LTE B48	20	55434	3569.4	2x2	LTE B48	20	55632	3589.2	2x2	LTE B48	20	56640	3690	4x4	LTE B48	20	56442	3670.2	4x4						21.27	21.40
CA_[48C]-[48D]	LTE B48	10	55290	3555	16QAM	1	25	55290	3555	4x4	LTE B48	20	55434	3569.4	4x4	LTE B48	20	56640	3690	4x4	LTE B48	20	56442	3670.2	4x4	LTE B48	20	56244	3650.4	4x4						21.28	21.40
CA_[48D]-[48C]	LTE B48	10	55290	3555	16QAM	1	25	55290	3555	4x4	LTE B48	20	55434	3569.4	4x4	LTE B48	20	55632	3589.2	4x4	LTE B48	20	56640	3690	4x4	LTE B48	20	56442	3670.2	4x4						21.31	21.40
CA_[48F]	LTE B48	10	55290	3555	16QAM	1	25	55290	3555	4x4	LTE B48	20	55434	3569.4	4x4	LTE B48	20	55632	3589.2	4x4	LTE B48	20	55830	3609	4x4	LTE B48	20	56028	3628.8	4x4						21.30	21.40

J.4 Downlink Carrier Aggregation with CA_41C Uplink Carrier Aggregation enabled

This device supports uplink carrier aggregation (ULCA) with additional Carrier Aggregation configurations active in the downlink. Power measurements were performed with ULCA active and additional CA configurations active in the downlink for the configuration per Fall 2017 TCB Workshop Notes.

Per FCC Guidance, additional SAR measurements for these configurations were not required since their maximum output power was not more than 0.25 dB higher than the maximum output power for with only ULCA active.

J.4.1 DL Carrier Aggregation RF Conducted Powers

Table J-27
Maximum Output Powers

	PCC									SCC 1									SCC 2				Power	
Combination	PCC Band	PCC BW [MHz]	PCC (UL) Ch.	PCC (UL) Freq. [MHz]	Mod.	PCC UL# RB	PCC UL RB Offset	PCC (DL) Channel	PCC (DL) Freq. [MHz]	SCC Band	SCC BW [MHz]	SCC (UL) Ch.	SCC (UL) Freq. [MHz]	Mod.	SCC UL# RB	SCC UL RB Offset	SCC (DL) Channel	SCC (DL) Freq. [MHz]	SCC Band	SCC BW [MHz]	SCC (DL) Channel	SCC (DL) Freq. [MHz]	ULCA Tx.Power with add'l CA config. active (dBm)	ULCA Tx Power (dBm)
CA_41D	LTE B41	20	39750	2506	QPSK	1	50	39750	2506	LTE B41	20	39948	2525.8	QPSK	1	0	39948	2525.8	LTE B41	20	40146	2545.6	23.45	23.54

J.4.2 DL Carrier Aggregation with DL 4x4 MIMO RF Conducted Powers

Note: 4x4 DL MIMO is only operating in the downlink. Uplink transmission is limited to a single output stream for each component carrier of ULCA.

Table J-28
Maximum Output Powers

	PCC										SCC 1										Power	
Combination	PCC Band	PCC BW [MHz]	PCC (UL) Ch.	PCC (UL) Freq. [MHz]	Mod.	PCC UL# RB	PCC UL RB Offset	PCC (DL) Ch.	PCC (DL) Freq. [MHz]	DL Ant. Config.	SCC Band	SCC BW [MHz]	SCC (UL) Ch.	SCC (UL) Freq. [MHz]	Mod.	SCC UL# RB	SCC UL RB Offset	SCC (DL) Ch.	SCC (DL) Freq. [MHz]	DL Ant. Config.	ULCA Tx.Power with add'l CA config.	ULCA Tx Power (dBm)
CA_[66B]	LTE B66	10	132022	1715	QPSK	1	49	66486	2115	4x4	LTE B66	10	132121	1724.9	QPSK	1	0	66585	2124.9	4x4	23.58	23.49
CA_[66C]	LTE B66	20	132072	1720	QPSK	1	99	66536	2120	4x4	LTE B66	20	132270	1739.8	QPSK	1	0	66734	2139.8	4x4	23.41	23.56

	PCC										SCC 1										SCC 2					Power	
Combination	PCC Band	PCC BW [MHz]	PCC (UL) Ch.	PCC (UL) Freq. [MHz]	Mod.	PCC UL# RB	PCC UL RB Offset	PCC (DL) Ch.	PCC (DL) Freq. [MHz]	DL Ant. Config.	SCC Band	SCC BW [MHz]	SCC (UL) Ch.	SCC (UL) Freq. [MHz]	Mod.	SCC UL# RB	SCC UL RB Offset	SCC (DL) Ch.	SCC (DL) Freq. [MHz]	DL Ant. Config.	SCC Band	SCC BW [MHz]	SCC (DL) Ch.	SCC (DL) Freq. [MHz]	DL Ant. Config.	ULCA Tx.Power with add'l CA config.	ULCA Tx Power (dBm)
CA_[41C] (1)	LTE B41	20	39750	2506	QPSK	1	50	39750	2506	4x4	LTE B41	20	39948	2525.8	QPSK	1	0	39948	2525.8	4x4	-	-	-	-	-	23.47	23.54
CA_[41D]	LTE B41	20	39750	2506	QPSK	1	50	39750	2506	4x4	LTE B41	20	39948	2525.8	QPSK	1	0	39948	2525.8	4x4	LTE B41	20	40146	2545.6	4x4	23.42	23.54

	PCC										SCC 1										Power	
Combination	PCC Band	PCC BW [MHz]	PCC (UL) Ch.	PCC (UL) Freq. [MHz]	Mod.	PCC UL# RB	PCC UL RB Offset	PCC (DL) Ch.	PCC (DL) Freq. [MHz]	DL Ant. Config.	SCC Band	SCC BW [MHz]	SCC (UL) Ch.	SCC (UL) Freq. [MHz]	Mod.	SCC UL# RB	SCC UL RB Offset	SCC (DL) Ch.	SCC (DL) Freq. [MHz]	DL Ant. Config.	ULCA Tx.Power with add'l CA config.	ULCA Tx Power (dBm)
CA_[48C]	LTE B48	20	55773	3603.3	QPSK	50	0	55773	3603.3	4x4	LTE B48	20	55575	3583.5	QPSK	50	50	55575	3583.5	4x4	20.96	20.98

© 2021 PCTEST