FCC CFR47 PART 22 SUBPART H
FCC CFR47 PART 24 SUBPART E

WWAN

C2PC CERTIFICATION TEST REPORT

FOR

GSM Phone + BT/BLE, DTS b/g/n

MODEL NUMBER : SM-J105H, SM-J105H/DD, SM-J105H/DS, SM-J106H/DS

FCC ID: A3LSMJ105H

REPORT NUMBER: 15K23808-E4V2

ISSUE DATE: SEP 16, 2016

Prepared for
SAMSUNG ELECTRONICS CO., LTD.
129 SAMSUNG-RO, YEONGTONG-GU, SUWON-SI,
GYEONGGI-DO, 16677, KOREA

Prepared by
UL Korea, Ltd. Suwon Laboratory
218 Maeyeong-ro, Yeongtong-gu,
Suwon-si, Gyeonggi-do, 16675, Korea
TEL: (031) 337-9902
FAX: (031) 213-5433

ACCREDITED
TL-637

Revision History

Rev.	Issue Date	Revisions	Revised By
V1	09/12/16	Initial issue	SungGil Park
V2	09/16/16	Revised Section 9	SungGil Park

UL Korea, Ltd. Suwon Laboratory FORM ID: FCC_22/24/27
218 Maeyeong-ro, Yeongtong-gu, Suwon-si, Gyeonggi-do, 443-823, Korea TEL: (031) 337-9902 FAX: (031) 213-5433
UL Korea, Ltd. Confidential
This report shall not be reproduced except in full, without the written approval of UL Korea, Ltd.

TABLE OF CONTENTS

1. ATTESTATION OF TEST RESULTS 4

2. TEST METHODOLOGY 5

3. FACILITIES AND ACCREDITATION 5

4. CALIBRATION AND UNCERTAINTY 5

4.1. MEASURING INSTRUMENT CALIBRATION 5

4.2. SAMPLE CALCULATION 5

4.3. MEASUREMENT UNCERTAINTY 5

5. EQUIPMENT UNDER TEST 6

5.1. DESCRIPTION OF EUT 6

5.2. MAXIMUM OUTPUT POWER 6

5.3. DESCRIPTION OF AVAILABLE ANTENNAS 6

5.4. DESCRIPTION OF TEST SETUP 7

6. TEST AND MEASUREMENT EQUIPMENT 9

7. Summary Table 10

8. RADIATED TEST RESULTS 11

8.1. RADIATED POWER (ERP & EIRP) 11

8.1.1. ERP/EIRP Results 12

8.1.2. ERP/EIRP DATA 13

8.2. FIELD STRENGTH OF SPURIOUS RADIATION 15

8.2.1. SPURIOUS RADIATION TEST RESULT 16

9. SETUP PHOTOS 18

UL Korea, Ltd. Suwon Laboratory FORM ID: FCC_22/24/27
218 Maeyeong-ro, Yeongtong-gu, Suwon-si, Gyeonggi-do, 443-823, Korea TEL: (031) 337-9902 FAX: (031) 213-5433

UL Korea, Ltd. Confidential
This report shall not be reproduced except in full, without the written approval of UL Korea, Ltd.

1. ATTESTATION OF TEST RESULTS

COMPANY NAME: SAMSUNG ELECTRONICS CO., LTD.

EUT DESCRIPTION: GSM Phone + BT/BLE, DTS b/g/n

MODEL NUMBER: SM-J105H, SM-J105H/DD, SM-J105H/DS, SM-J106H/DS

SERIAL NUMBER: R31H80008PB (RADIATED); R31H80007AM (CONDUCTED)

DATE TESTED: AUG 23, 2016 - SEP 12, 2016

APPLICABLE STANDARDS	
STANDARD	**TEST RESULTS**
FCC PART 22H and 24E	Pass

UL Korea, Ltd. tested the above equipment in accordance with the requirements set forth in the above standards. All indications of Pass/Fail in this report are opinions expressed by UL Korea, Ltd. based on interpretations and/or observations of test results. Measurement Uncertainties were not taken into account and are published for informational purposes only. The test results show that the equipment tested is capable of demonstrating compliance with the requirements as documented in this report.

Note: The results documented in this report apply only to the tested sample, under the conditions and modes of operation as described herein. This document may not be altered or revised in any way unless done so by UL Korea, Ltd. and all revisions are duly noted in the revisions section. Any alteration of this document not carried out by UL Korea, Ltd. will constitute fraud and shall nullify the document. This report must not be used by the client to claim product certification, approval, or endorsement by IAS, any agency of the Federal Government, or any agency of any government.

Approved & Released For
UL Korea, Ltd. By:

CY Choi
Suwon Lab Engineer
UL Korea, Ltd.

Tested By:

SungGil Park
Suwon Lab Engineer
UL Korea, Ltd.

UL Korea, Ltd. Suwon Laboratory FORM ID: FCC_22/24/27
218 Maeyeong-ro, Yeongtong-gu, Suwon-si, Gyeonggi-do, 443-823, Korea TEL: (031) 337-9902 FAX: (031) 213-5433
UL Korea, Ltd. Confidential
This report shall not be reproduced except in full, without the written approval of UL Korea, Ltd.

2. TEST METHODOLOGY

The tests documented in this report were performed in accordance with TIA-603-D, FCC CFR 47 Part 2, FCC CFR 47 Part 22 and FCC CFR Part 24

3. FACILITIES AND ACCREDITATION

The test sites and measurement facilities used to collect data are located at 218 Maeyeong-ro, Yeongtong-gu, Suwon-si, Gyeonggi-do, 16675, Korea. Line conducted emissions are measured only at the 218 address. The following table identifies which facilities were utilized for radiated emission measurements documented in this report. Specific facilities are also identified in the test results sections.

218 Maeyeong-ro
☐ Chamber 1
☒ Chamber 2

UL Korea, Ltd. is accredited by IAS, Laboratory Code TL-637. The full scope of accreditation can be viewed at http://www.iasonline.org/PDF/TL/TL-637.pdf.

4. CALIBRATION AND UNCERTAINTY

4.1. MEASURING INSTRUMENT CALIBRATION

The measuring equipment utilized to perform the tests documented in this report has been calibrated in accordance with the manufacturer's recommendations, and is traceable to recognized national standards.

4.2. SAMPLE CALCULATION

Where relevant, the following sample calculation is provided:

EIRP = PSA reading with EUT worst orientation (dBm) + Path loss (dB) – cable loss(between the SG and substitution antenna) + Substitution Antenna Factor (dBi)
ERP = PSA reading with EUT worst orientation (dBm) + Path loss (dB) – cable loss(between the SG and substitution antenna)
(Path loss = Signal generator output – PSA reading with substitution antenna)

4.3. MEASUREMENT UNCERTAINTY

Where relevant, the following measurement uncertainty levels have been estimated for tests performed on the apparatus:

PARAMETER	UNCERTAINTY
Conducted Disturbance, 0.15 to 30 MHz	2.32 dB
Radiated Disturbance, Below 1GHz	4.14 dB
Radiated Disturbance, Above 1 GHz	5.97 dB

Uncertainty figures are valid to a confidence level of 95%.

UL Korea, Ltd. Confidential
This report shall not be reproduced except in full, without the written approval of UL Korea, Ltd.

5. EQUIPMENT UNDER TEST

5.1. DESCRIPTION OF EUT

This EUT is GSM Phone + BT/BLE, DTS b/g/n.

SM-J105H and SM-J105H/DS are same hardware, but for different number of SIM card slot.
SM-J105H has one slot. SM-J105H/DS is dual SIM version.
SM-J105H/DS and SM-J106H/DS are same hardware, but for different memory capacity and flash LED.
SM-J106H/DS was used for this C2PC test.

5.2. MAXIMUM OUTPUT POWER

Please refer to WWAN test report(FCM-047-L1-1) of FCC ID: A3LSMJ105H

5.3. DESCRIPTION OF AVAILABLE ANTENNAS

The radio utilizes a FPCB antenna for the [List the bands supported] with a maximum peak gain as follow:

Frequency (MHz)	Peak Gain (dBi)
GSM850 824 ~ 849 MHz	-1.7
GSM1900 1850 ~ 1910 MHz	2.8

UL Korea, Ltd. Suwon Laboratory FORM ID: FCC_22/24/27
218 Maeyeong-ro, Yeongtong-gu, Suwon-si, Gyeonggi-do, 443-823, Korea TEL: (031) 337-9902 FAX: (031) 213-5433
UL Korea, Ltd. Confidential
This report shall not be reproduced except in full, without the written approval of UL Korea, Ltd.

5.4. DESCRIPTION OF TEST SETUP

SUPPORT EQUIPMENT

Support Equipment List				
Description	**Manufacturer**	**Model**	**Serial Number**	**FCC ID**
Adapter	SAMSUNG	ETA0U60JBE	DK1G826HS17-E	N/A
Data Cable	SAMSUNG	ECB-DU2EBE	N/A	N/A
Wireless Charger	SAMSUNG	EP-YO760	N/A	A3LEPYO760

I/O CABLES

I/O Cable List						
Cable No	**Port**	**# of identical ports**	**Connector Type**	**Cable Type**	**Cable Length (m)**	**Remarks**
1	DC Power	1	Mini-USB	Shielded	0.8m	N/A

TEST SETUP

The EUT is continuously communicated to the call box during the tests.

UL Korea, Ltd. Suwon Laboratory FORM ID: FCC_22/24/27
218 Maeyeong-ro, Yeongtong-gu, Suwon-si, Gyeonggi-do, 443-823, Korea TEL: (031) 337-9902 FAX: (031) 213-5433
UL Korea, Ltd. Confidential
This report shall not be reproduced except in full, without the written approval of UL Korea, Ltd.

SETUP DIAGRAM FOR TESTS (CONDUCTED TEST SETUP)

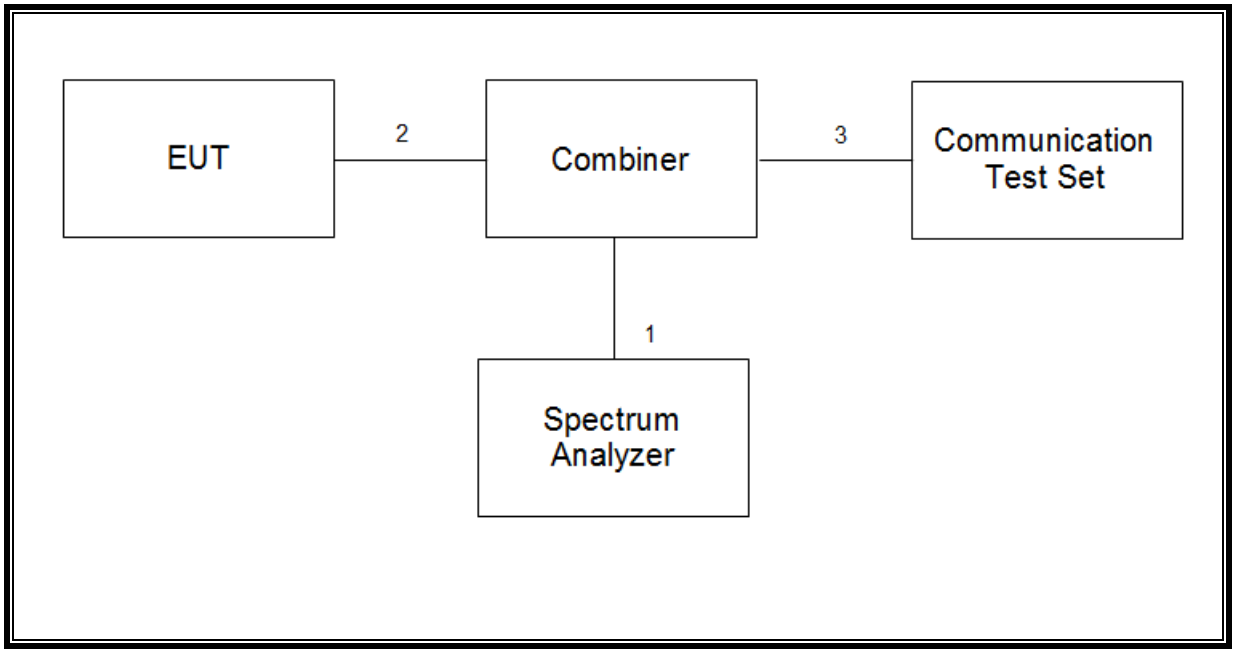

SETUP DIAGRAM FOR TESTS (RADIATED TEST SETUP)

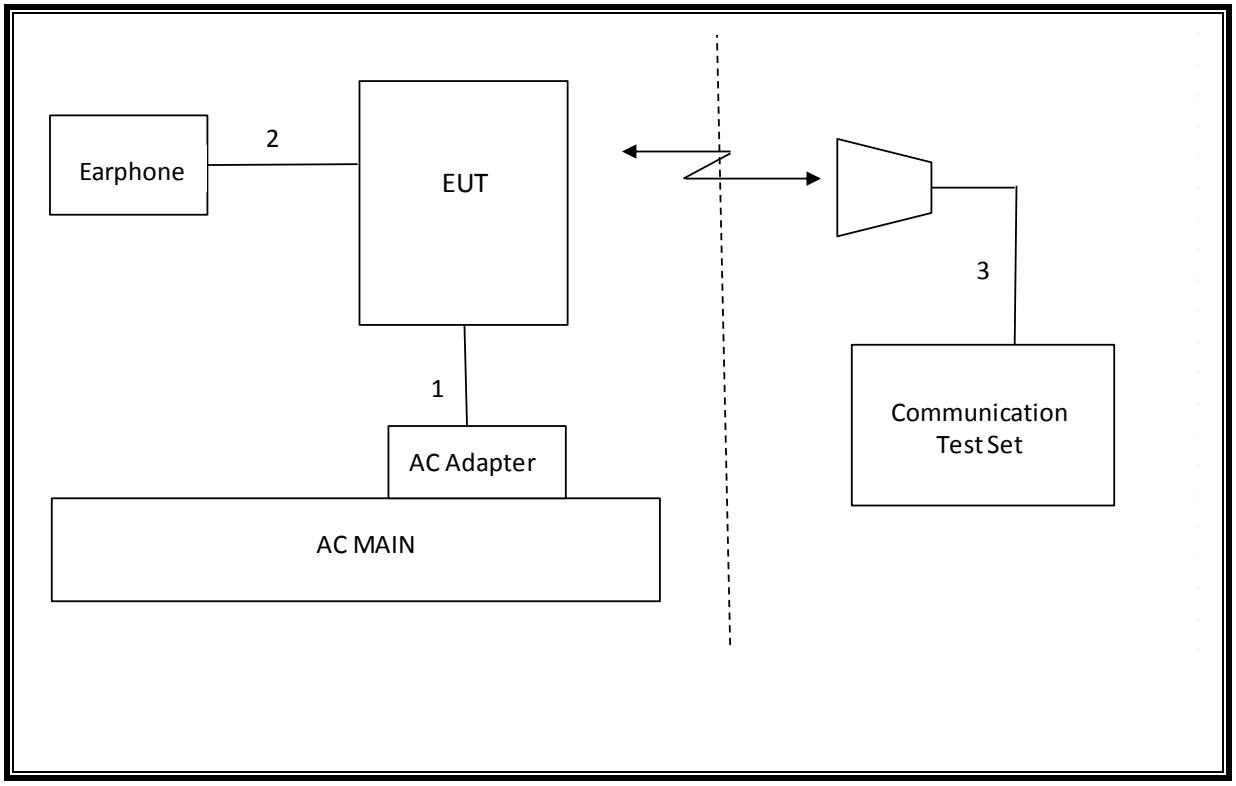

UL Korea, Ltd. Suwon Laboratory FORM ID: FCC_22/24/27
218 Maeyeong-ro, Yeongtong-gu, Suwon-si, Gyeonggi-do, 443-823, Korea TEL: (031) 337-9902 FAX: (031) 213-5433
UL Korea, Ltd. Confidential
This report shall not be reproduced except in full, without the written approval of UL Korea, Ltd.

6. TEST AND MEASUREMENT EQUIPMENT

The following test and measurement equipment was utilized for the tests documented in this report:

Test Equipment List				
Description	**Manufacturer**	**Model**	**S/N**	**Cal Due**
Antenna, Tuned Dipole 400~1000 MHz	ETS	3121D DB4	00164753	07-28-17
Antenna, Horn, 40 GHz	ETS	3116C	00166155	11-30-17
Antenna, Horn, 40 GHz	ETS	3116C-PA	00168841	12-15-17
Antenna, Bilog, 30MHz-1GHz	SCHWARZBECK	VULB9163	750	11-17-16
Antenna, Bilog, 30MHz-1GHz	SCHWARZBECK	VULB9163	749	04-25-17
Antenna, Horn, 18 GHz	ETS	3115	00167211	09-20-16
Antenna, Horn, 18 GHz	ETS	3115	00161451	05-17-17
Antenna, Horn, 18 GHz	ETS	3117	00168724	06-17-17
Antenna, Horn, 18 GHz	ETS	3117	00168717	06-17-17
Combiner	WEINSCHEL	1575	2152	08-16-17
Communications Test Set	R&S	CMW500	150312	08-17-17
Communications Test Set	R&S	CMW500	115331	08-17-17
DC Power Supply	Agilent / HP	E3640A	MY54226395	08-16-17
Preamplifier, 1000 MHz	Sonoma	310N	341282	08-17-17
Preamplifier, 1000 MHz	Sonoma	310N	351741	08-16-17
Preamplifier	ETS	3115-PA	00167475	08-17-17
Preamplifier, 18 GHz	Miteq	AFS42-00101800-25-S-42	1896138	08-16-17
Spectrum Analyzer, 44 GHz	Agilent / HP	N9030A	MY54170614	08-17-17
Spectrum Analyzer, 44 GHz	Agilent / HP	N9030A	MY54490312	08-16-17
Bluetooth Tester	TESCOM	TC-3000C	3000C000546	08-18-17
Average Power Sensor	R&S	NRZ-Z91	102681	08-16-17
Average Power Sensor	Agilent / HP	U2000	MY54270007	08-17-17
EMI Test Receive, 40 GHz	R&S	ESU40	100439	08-17-17
EMI Test Receive, 40 GHz	R&S	ESU40	100457	08-16-17
EMI Test Receive, 3 GHz	R&S	ESR3	101832	08-16-17
Attenuator / Switch driver	HP	11713A	3748A04272	N/A
High Pass Filter 1.2GHz	Micro-Tronics	HPM50108-02	G005	08-17-17
High Pass Filter 1.2GHz	Micro-Tronics	HPM50108-02	G006	08-17-17
High Pass Filter 2.8GHz	Micro-Tronics	HPM50111-02	010	08-17-17
High Pass Filter 2.8GHz	Micro-Tronics	HPM50111-02	011	08-17-17
High Pass Filter 4GHz	Micro-Tronics	HPM50118-02	G001	08-17-17
High Pass Filter 4GHz	Micro-Tronics	HPM50118-02	G002	08-17-17
LISN	R&S	ENV-216	101836	08-16-17
LISN	R&S	ENV-216	101837	08-16-17
Attenuator	PASTERNACK	PE7087-10	A009	08-16-17

UL Korea, Ltd. Suwon Laboratory FORM ID: FCC_22/24/27
218 Maeyeong-ro, Yeongtong-gu, Suwon-si, Gyeonggi-do, 443-823, Korea TEL: (031) 337-9902 FAX: (031) 213-5433
UL Korea, Ltd. Confidential
This report shall not be reproduced except in full, without the written approval of UL Korea, Ltd.

7. Summary Table

C2PC Reason: Please see SM-J106H/DS C2PC description for details.
: The only changes of this C2PC model are memory capacity and flash LED (minor circuitry for non-transmitter portions), so we tested only radiated items.
The other items, Please refer to WWAN test report(FCM-047-L1-1) of FCC ID: A3LSMJ105H

FCC Part Section	Test Description	Test Limit	Test Condition	Test Result
2.1049	Occupied Band width (99%)	N/A	Conducted	See Original
22.917(a) 24.238(a)	Band Edge / Conducted Spurious Emission	-13dBm		See Original
2.1046	Conducted output power	N/A		See Original
22.355 24.235 27.54	Frequency Stability	2.5PPM		See Original
22.913(a)(2)	Effective Radiated Power	38 dBm	Radiated	Pass
24.232(c)	Equivalent Isotropic Radiated Power	33dBm		Pass
22.917(a) 24.238(a)	Radiated Spurious Emission	-13dBm		Pass

FCC Rule Part	Frequency Range [MHz]	Output Power [W]	Frequency Tolerance	Emission Designator	Emission Bandwidth [MHz]	Communication Type
GSM						
22H	824.2 - 848.8	0.484	2.5 ppm	248KGXW		GSM850
24E	1850.2 - 1909.8	1.371	2.5 ppm	247KGXW		GSM1900

UL Korea, Ltd. Suwon Laboratory FORM ID: FCC_22/24/27
218 Maeyeong-ro, Yeongtong-gu, Suwon-si, Gyeonggi-do, 443-823, Korea TEL: (031) 337-9902 FAX: (031) 213-5433
UL Korea, Ltd. Confidential
This report shall not be reproduced except in full, without the written approval of UL Korea, Ltd.

8. RADIATED TEST RESULTS

8.1. RADIATED POWER (ERP & EIRP)

RULE PART(S)

FCC: §2.1046, §22.913 and §24.232

LIMITS

22.913(a) - The ERP of mobile transmitters and auxiliary test transmitters must not exceed 7 Watts.

24.232(c) - Mobile/portable stations are limited to 2 watts e.i.r.p. peak power and the equipment must employ means to limit the power to the minimum necessary for successful communications.

In addition, when the transmitter power is measured in terms of average value, the peak-to-average ratio of the power shall not exceed 13dB.

TEST PROCEDURE

ANSI / TIA / EIA 603D Clause 2.2.17; MXA setting reference to 971168 D01 v02r02

For peak power measurement with a MXA:

a) Set the RBW ≥ OBW; b) Set VBW ≥ 3 × RBW; c) Set span ≥ 2 x RBW; d) Sweep time = auto couple; e) Detector = peak; f) Ensure that the number of measurement points ≥ span/RBW; g) Trace mode = max hold;

For average power measurement with a MXA:

a) Set span to at least 1.5 times the OBW; b) Set RBW = 1-5% of the OBW, not to exceed 1 MHz; c) Set VBW ≥ 3 x RBW; d) Set number of points in sweep ≥ 2 × span / RBW; e) Sweep time = auto-couple; f) Detector = RMS (power averaging); g) Use free run trigger If burst duty cycle ≥ 98; h) Use trigger to capture bursts If burst duty cycle < 98; i) Trace average at least 100 traces in power averaging (*i.e.*, RMS) mode. j) Compute the power by integrating the spectrum across the OBW of the signal using the instrument's band power measurement function.

TEST RESULTS

UL Korea, Ltd. Suwon Laboratory FORM ID: FCC_22/24/27
218 Maeyeong-ro, Yeongtong-gu, Suwon-si, Gyeonggi-do, 443-823, Korea TEL: (031) 337-9902 FAX: (031) 213-5433
UL Korea, Ltd. Confidential
This report shall not be reproduced except in full, without the written approval of UL Korea, Ltd.

8.1.1. ERP/EIRP Results

GSM

Band	Mode	Channel	f [MHz]	ERP / EIRP	
				[dBm]	[mW]
GSM850	GPRS	128	824.2	26.57	453.94
		190	836.6	26.73	470.98
		251	848.8	26.85	484.17
GSM1900	GPRS	512	1850.2	31.16	1306.17
		661	1880.0	31.30	1348.96
		810	1909.8	31.37	1370.88

UL Korea, Ltd. Suwon Laboratory FORM ID: FCC_22/24/27
218 Maeyeong-ro, Yeongtong-gu, Suwon-si, Gyeonggi-do, 443-823, Korea TEL: (031) 337-9902 FAX: (031) 213-5433
UL Korea, Ltd. Confidential
This report shall not be reproduced except in full, without the written approval of UL Korea, Ltd.

8.1.2. ERP/EIRP DATA

GSM 850

GSM

GSM850

High Frequency Substitution Measurement
UL Korea, Ltd. Suwon Laboratory Chamber 2

Company: Samsung
Project #: 16K23808
Date: 09-02-16
Test Engineer: YH Lim
Configuration: EUT ONLY, Z Position
Mode: GPRS 850 MHz

Test Equipment:
Receiving: VULB9163-749, and 3m Chamber N-type Cable (Setup this one for testing EUT)
Substitution: Dipole S/N: 00164753, 3m SMA Cable Warehouse.

f MHz	SG reading (dBm)	Ant. Pol. (H/V)	Cable Loss (dB)	Antenna Gain (dBd)	ERP (dBm)	Limit (dBm)	Margin (dB)	Notes
Low Ch								
824.20	29.19	V	1.1	-1.6	26.57	38.5	-11.9	
824.20	13.09	H	1.1	-1.6	10.47	38.5	-28.0	
Mid Ch								
836.60	29.22	V	1.1	-1.4	26.73	38.5	-11.7	
836.60	13.45	H	1.1	-1.4	10.96	38.5	-27.5	
High Ch								
848.80	29.21	V	1.1	-1.3	26.85	38.5	-11.6	
848.80	14.14	H	1.1	-1.3	11.78	38.5	-26.7	

Rev. 3.17.11
Note: For Band 13/17 ERP limit is 34.77dBm; For Band 26 limit is 50dBm

UL Korea, Ltd. Suwon Laboratory FORM ID: FCC_22/24/27
218 Maeyeong-ro, Yeongtong-gu, Suwon-si, Gyeonggi-do, 443-823, Korea TEL: (031) 337-9902 FAX: (031) 213-5433
UL Korea, Ltd. Confidential
This report shall not be reproduced except in full, without the written approval of UL Korea, Ltd.

GSM 1900

GSM

GSM1900

High Frequency Substitution Measurement
UL Korea, Ltd. Suwon Laboratory Chamber 2

Company: Samsung
Project #: 16K23808
Date: 09-02-16
Test Engineer: YH Lim
Configuration: EUT ONLY, X Position
Mode: GPRS 1900MHz

Test Equipment:
Receiving: 3117[00168724] and Chamber 1 SMA Cables
Substitution: 3115[00161451] Substitution, 3m SMA Cable Warehouse

f GHz	SG reading (dBm)	Ant. Pol. (H/V)	Cable Loss (dB)	Antenna Gain (dBi)	EIRP (dBm)	Limit (dBm)	Delta (dB)	Notes
Low Ch								
1850.20	20.9	V	1.60	8.80	28.11	33.0	-4.9	
1850.20	24.0	H	1.60	8.80	31.16	33.0	-1.8	
Mid Ch								
1880.00	23.3	V	1.62	8.62	30.26	33.0	-2.7	
1880.00	24.3	H	1.62	8.62	31.30	33.0	-1.7	
High Ch								
1909.80	23.3	V	1.63	8.44	30.07	33.0	-2.9	
1909.80	24.6	H	1.63	8.44	31.37	33.0	-1.6	

Rev. 3.17.11

UL Korea, Ltd. Suwon Laboratory FORM ID: FCC_22/24/27
218 Maeyeong-ro, Yeongtong-gu, Suwon-si, Gyeonggi-do, 443-823, Korea TEL: (031) 337-9902 FAX: (031) 213-5433
UL Korea, Ltd. Confidential
This report shall not be reproduced except in full, without the written approval of UL Korea, Ltd.

8.2. FIELD STRENGTH OF SPURIOUS RADIATION

RULE PART(S)

FCC: §2.1053, §22.917 and §24.238

LIMIT

The power of any emission outside of the authorized operating frequency ranges must be attenuated below the transmitting power (P) by a factor of at least 43 + 10 log (P) dB.

TEST PROCEDURE

For Cellular equipment - Compliance with these rules is based on the use of measurement instrumentation employing a resolution bandwidth of 100 kHz or greater. In the 1 MHz bands immediately outside and adjacent to the frequency block a resolution bandwidth of at least one percent of the emission bandwidth of the fundamental emission of the transmitter may be employed. A narrower resolution bandwidth is permitted in all cases to improve measurement accuracy provided the measured power is integrated over the full required measurement bandwidth (i.e. 100 kHz or 1 percent of emission bandwidth, as specified). The emission bandwidth is defined as the width of the signal between two points, one below the carrier center frequency and one above the carrier center frequency, outside of which all emissions are attenuated at least 26 dB below the transmitter power.

For PCS equipment - Compliance with these rules is based on the use of measurement instrumentation employing a resolution bandwidth of 1 MHz or greater. However, in the 1 MHz bands immediately outside and adjacent to the frequency block a resolution bandwidth of at least one percent of the emission bandwidth of the fundamental emission of the transmitter may be employed. A narrower resolution bandwidth is permitted in all cases to improve measurement accuracy provided the measured power is integrated over the full required measurement bandwidth (i.e. 1 MHz or 1 percent of emission bandwidth, as specified). The emission bandwidth is defined as the width of the signal between two points, one below the carrier center frequency and one above the carrier center frequency, outside of which all emissions are attenuated at least 26 dB below the transmitter power.

RESULTS

UL Korea, Ltd. Suwon Laboratory FORM ID: FCC_22/24/27
218 Maeyeong-ro, Yeongtong-gu, Suwon-si, Gyeonggi-do, 443-823, Korea TEL: (031) 337-9902 FAX: (031) 213-5433
UL Korea, Ltd. Confidential
This report shall not be reproduced except in full, without the written approval of UL Korea, Ltd.

8.2.1. SPURIOUS RADIATION TEST RESULT

GSM 850

GSM

GSM850

UL Korea, Ltd Suwon Laboratory
Above 1GHz High Frequency Substitution Measurement

Company: Samsung
Project #: 16K23808
Date: 09-01-16
Test Engineer: YH Lim
Configuration: EUT / AC Adapter / Earphone, Z Position
Mode: GPRS 850 MHz

Chamber	Pre-amplifer	Filter	Limit
Chamber 2	AFS42	Filter 1	Part 22

f GHz	SG reading (dBm)	Ant. Pol. (H/V)	Distance (m)	Preamp (dB)	Filter (dB)	EIRP (dBm)	Limit (dBm)	Delta (dB)	Notes
Low Ch, 824.2MHz									
1.6484	4.4	V	3.0	39.1	1.0	-33.7	-13.0	-20.7	
2.4726	-13.5	V	3.0	39.5	1.0	-52.1	-13.0	-39.1	
3.2968	-7.9	V	3.0	40.1	1.0	-47.0	-13.0	-34.0	
1.6484	1.5	H	3.0	39.1	1.0	-36.6	-13.0	-23.6	
2.4726	-15.5	H	3.0	39.5	1.0	-54.0	-13.0	-41.0	
3.2968	-11.9	H	3.0	40.1	1.0	-50.9	-13.0	-37.9	
Mid Ch, 836.6MHz									
1.6730	1.8	V	3.0	39.1	1.0	-36.4	-13.0	-23.4	
2.5098	-12.0	V	3.0	39.5	1.0	-50.6	-13.0	-37.6	
3.3464	-6.8	V	3.0	40.1	1.0	-45.9	-13.0	-32.9	
1.6730	-1.4	H	3.0	39.1	1.0	-39.5	-13.0	-26.5	
2.5098	-13.4	H	3.0	39.5	1.0	-52.0	-13.0	-39.0	
3.3464	-10.6	H	3.0	40.1	1.0	-49.8	-13.0	-36.8	
High Ch, 848.8MHz									
1.6976	-3.0	V	3.0	39.1	1.0	-41.2	-13.0	-28.2	
2.5466	-9.8	V	3.0	39.6	1.0	-48.3	-13.0	-35.3	
3.3952	-4.7	V	3.0	40.2	1.0	-43.9	-13.0	-30.9	
1.6976	-4.2	H	3.0	39.1	1.0	-42.3	-13.0	-29.3	
2.5466	-13.1	H	3.0	39.6	1.0	-51.7	-13.0	-38.7	
3.3952	-5.9	H	3.0	40.2	1.0	-45.1	-13.0	-32.1	

Rev. 03.03.09
Note: No other emissions were detected above the system noise floor.

UL Korea, Ltd. Confidential
This report shall not be reproduced except in full, without the written approval of UL Korea, Ltd.

GSM 1900

GSM

GSM1900

UL Korea, Ltd Suwon Laboratory
Above 1GHz High Frequency Substitution Measurement

Company: Samsung
Project #: 16K23808
Date: 09-01-16
Test Engineer: Chan Park
Configuration: EUT / AC Adapter / Earphone, X Position
Mode: GPRS 1900

Chamber	Pre-amplifer	Filter	Limit
Chamber 2	AFS42	Filter 1	Part 24

f GHz	SG reading (dBm)	Ant. Pol. (H/V)	Distance (m)	Preamp (dB)	Filter (dB)	EIRP (dBm)	Limit (dBm)	Delta (dB)	Notes
Low Ch, 1850.2MHz									
3.7004	-12.9	V	3.0	40.5	1.0	-52.4	-13.0	-39.4	
5.5506	-2.8	V	3.0	40.8	1.0	-42.6	-13.0	-29.6	
7.4008	-0.9	V	3.0	40.8	1.0	-40.7	-13.0	-27.7	
3.7000	-11.1	H	3.0	40.5	1.0	-50.6	-13.0	-37.6	
5.5506	-8.9	H	3.0	40.8	1.0	-48.7	-13.0	-35.7	
7.4008	0.3	H	3.0	40.8	1.0	-39.5	-13.0	-26.5	
Mid Ch, 1880.0MHz									
3.7600	-11.5	V	3.0	40.5	1.0	-51.0	-13.0	-38.0	
5.6400	-3.3	V	3.0	40.8	1.0	-43.1	-13.0	-30.1	
7.5200	-2.9	V	3.0	40.7	1.0	-42.6	-13.0	-29.6	
3.7600	-8.3	H	3.0	40.5	1.0	-47.9	-13.0	-34.9	
5.6400	-8.2	H	3.0	40.8	1.0	-48.0	-13.0	-35.0	
7.5200	-4.6	H	3.0	40.7	1.0	-44.3	-13.0	-31.3	
High Ch, 1909.8 MHz									
3.8196	-10.2	V	3.0	40.6	1.0	-49.8	-13.0	-36.8	
5.7294	-6.5	V	3.0	40.8	1.0	-46.3	-13.0	-33.3	
7.6392	-7.2	V	3.0	40.7	1.0	-46.8	-13.0	-33.8	
3.8196	-7.4	H	3.0	40.6	1.0	-47.0	-13.0	-34.0	
5.7294	-9.5	H	3.0	40.8	1.0	-49.3	-13.0	-36.3	
7.6392	-8.4	H	3.0	40.7	1.0	-48.0	-13.0	-35.0	

Rev. 03.03.09
Note: No other emissions were detected above the system noise floor.

UL Korea, Ltd. Suwon Laboratory FORM ID: FCC_22/24/27
218 Maeyeong-ro, Yeongtong-gu, Suwon-si, Gyeonggi-do, 443-823, Korea TEL: (031) 337-9902 FAX: (031) 213-5433
UL Korea, Ltd. Confidential
This report shall not be reproduced except in full, without the written approval of UL Korea, Ltd.