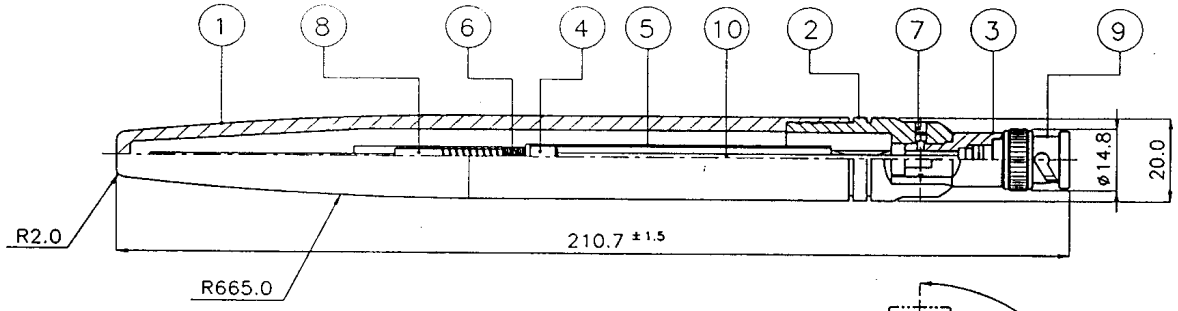

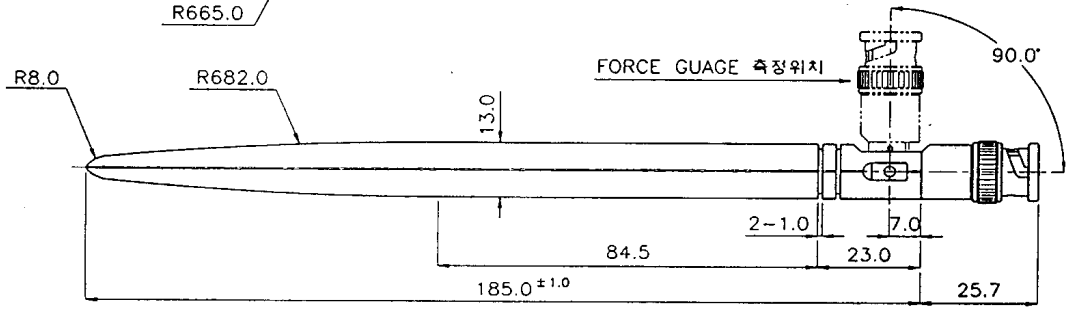

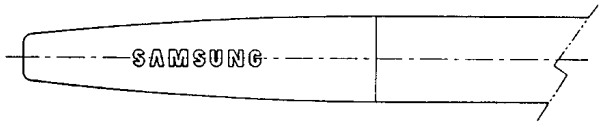

NOTE
1. 일반공차: ±0.1
2. FREQUENCY: 824~894MHz(CELLULAR)
3. 100회 BANDING TEST 반복후 0.8Kgf 이상일 것.
4. 100회 반복 BANDING TEST후 전.후.좌.우 유격이 2° 이내일 것.

No	DESCRIPTION	Q'TY	MATERIAL	Rev.	REMARKS
10	CABLE	1	RG-178/U	IR	N / A
9	CON' ASS'Y	1	BNC MALE	IR	BLACK Cr PLATED
8	TUBE	1	URETHANE	IR	N / A
7	SNAP PIN	2	KSD5102-C5101	IR	BLACK Cr PLATED
6	COIL	1	STEEL WIRE	IR	Ni PLATED
5	SLEEVE	1	KSD5301-C2600	IR	N / A
4	S/L JOINT	1	KSD5101-C3771	IR	Ni PLATED
3	JOINT-2	1	NYLON6+66+G30	IR	COLOR: DARK GRAY
2	JOINT-1	1	NYLON6+66+G30	IR	COLOR: DARK GRAY
1	COVER	1	URETHANE	IR	COLOR: DARK GRAY

SCALE	DRAWN	DESIGN	CHECK	APPRO	TITLE	ANT' ASS'Y
1/1	choi.s.g				MODEL	SCW-F200
DATE	1998. 3. 23.				APPLI	SPEC.
A3	DIMENSION mm		REVISION	A	DRAW. NO	SSCWF200-00-0000

AQF-04-02-01-C

ACE TECHNOLOGY