Block / Connection Diagram_Peacock16

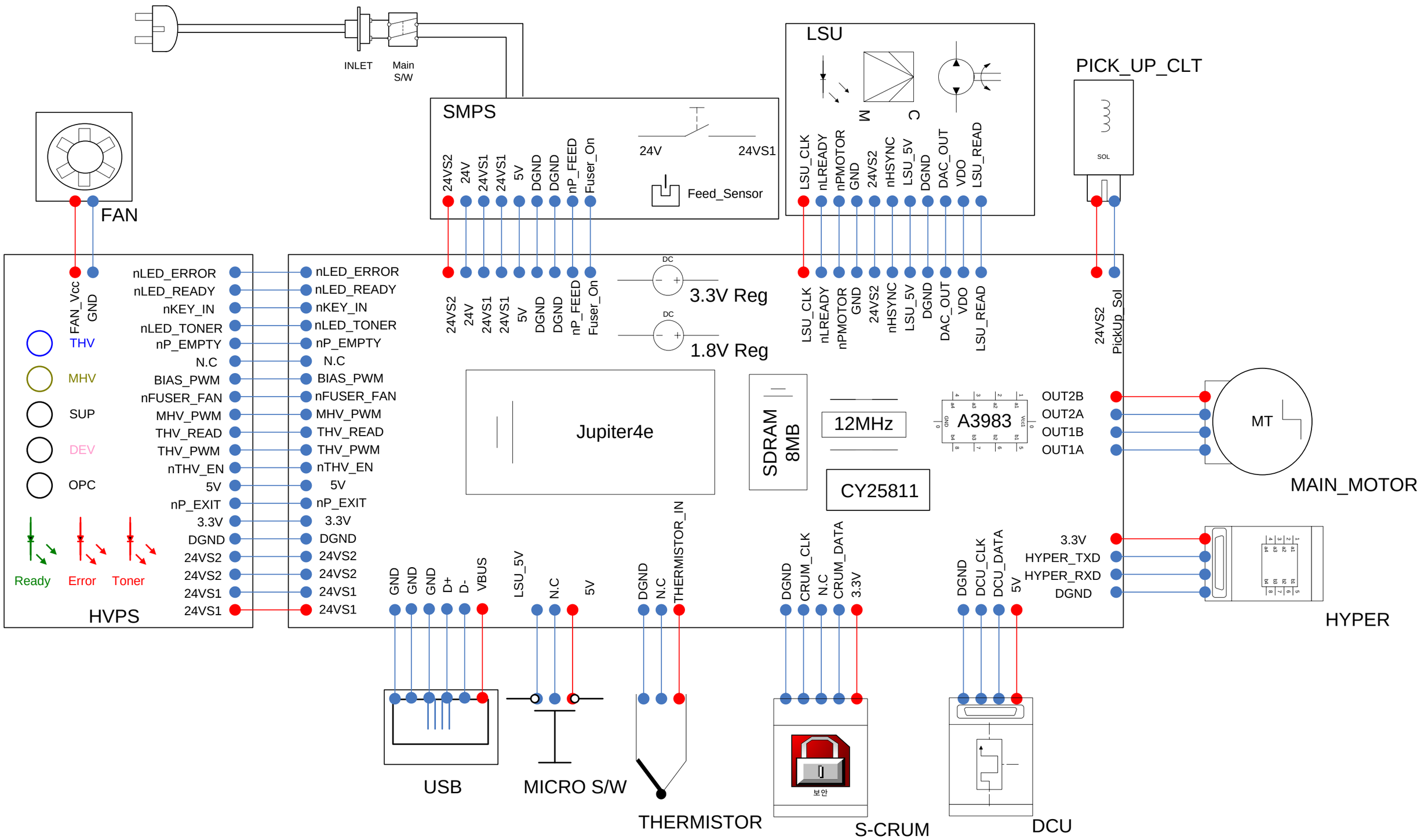

Peacock Hardware Team
Digital Priting Div.
Samsung Electronics
Oct.24.2007