SCHEMATIC DIAGRAM

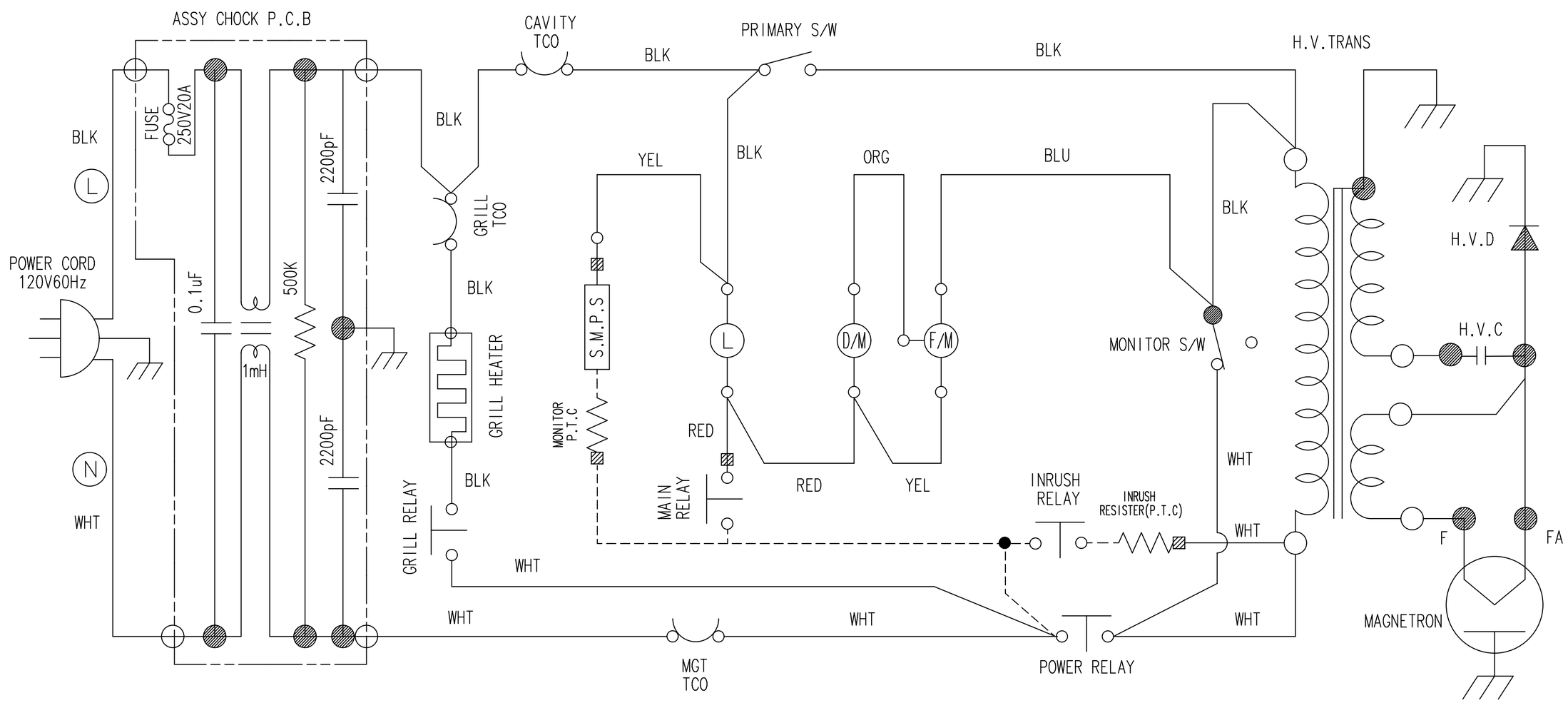

CONDITION OF OVEN
DOOR IS OPENED COOK OFF

WIRING COLOR
BLK:BLACK WHT:WHITE YEL:YELLOW BLU:BLUE BRN:BROWN RED:RED ORG:ORANGE GRN:GREEN

PCB PATTERN ------

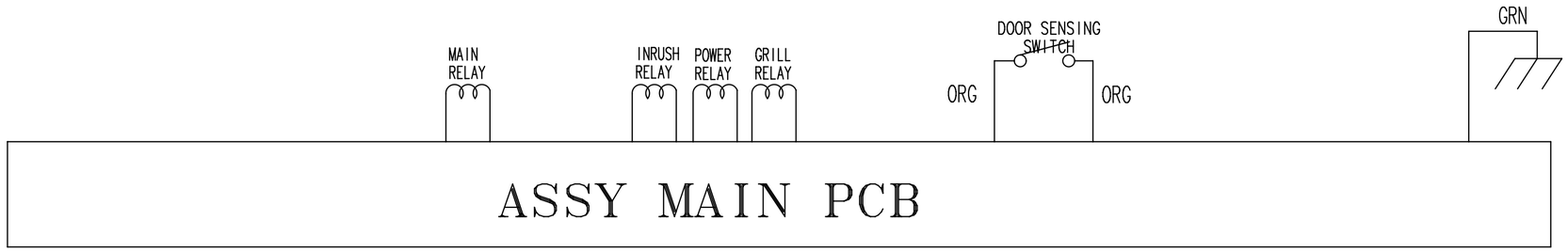

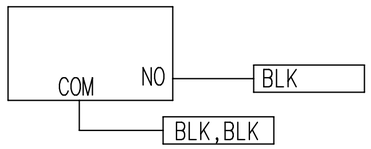

PRIMARY SWITCH

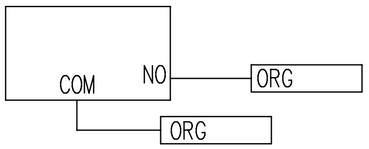

DOOR SENSING SWITCH

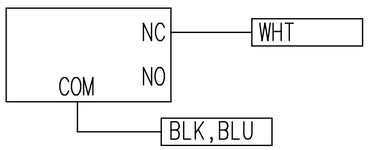

MONITOR SWITCH