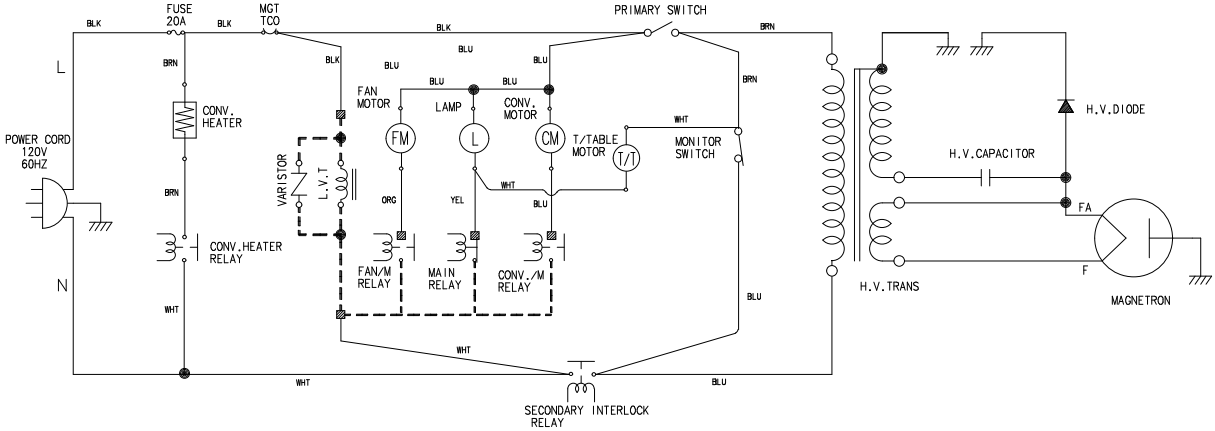

NOTE
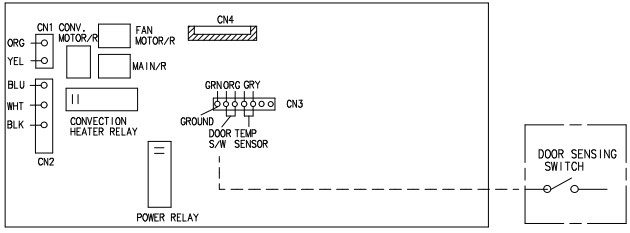
1. DOOR IS OPENED
2. - - - :PCB PATTERN
3. ▨ :P.C.B IN/OUT POINT