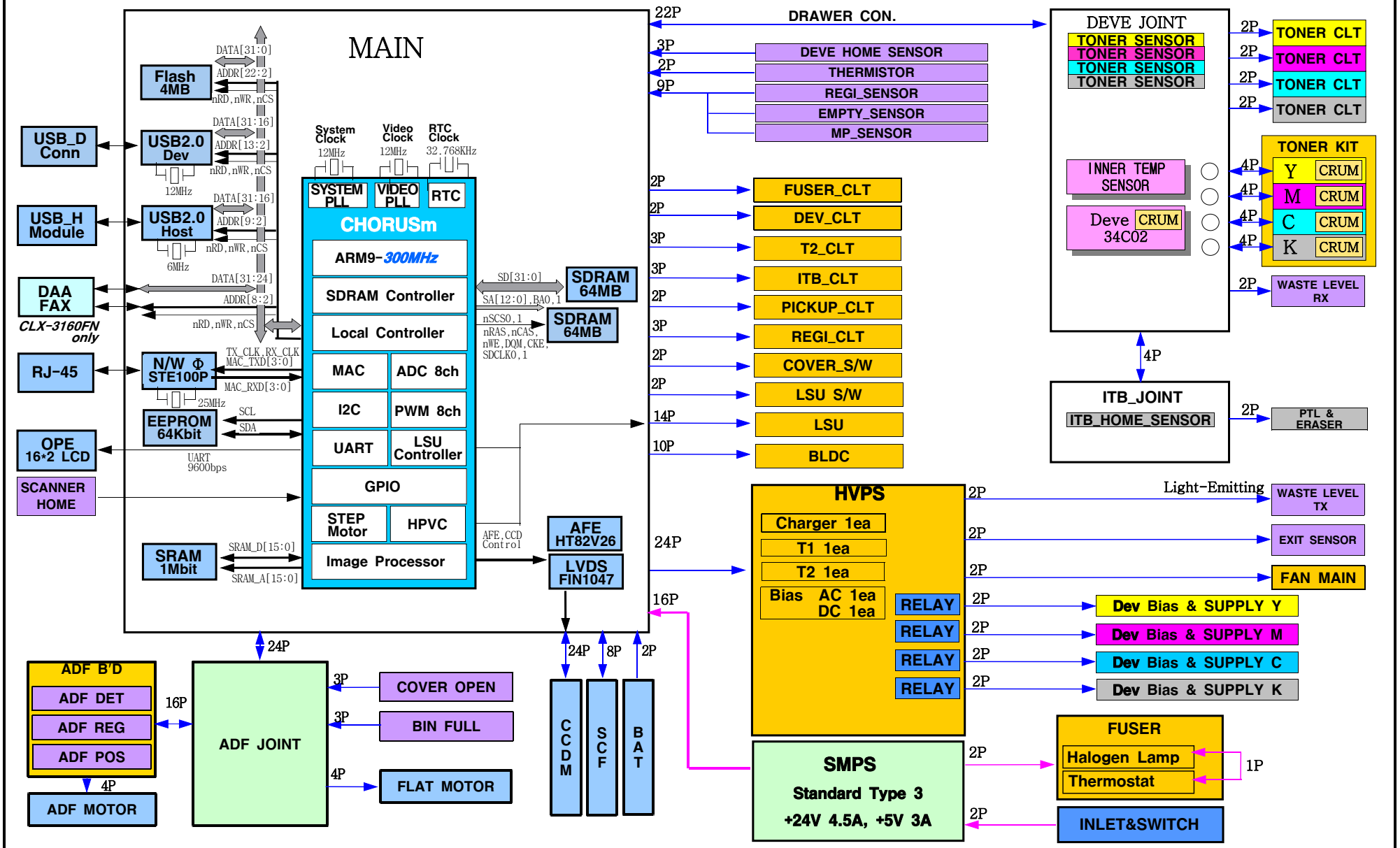[CLX-3160F(N)] Block Diagram