PDP MONITOR (HPL5025M) BLOCK DIAGRAM

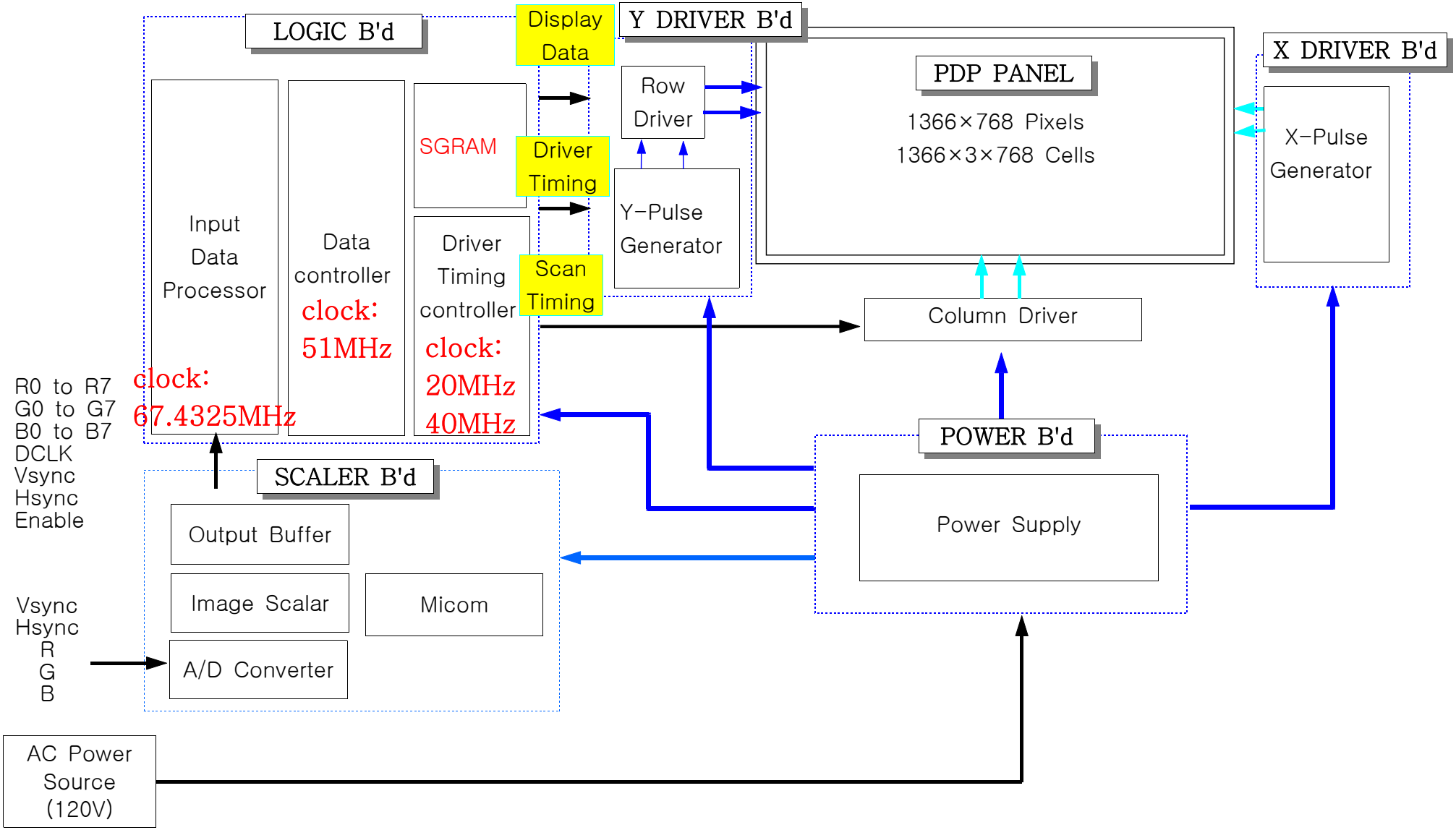

HPL5025M POWER B'd BLOCK DIAGRAM

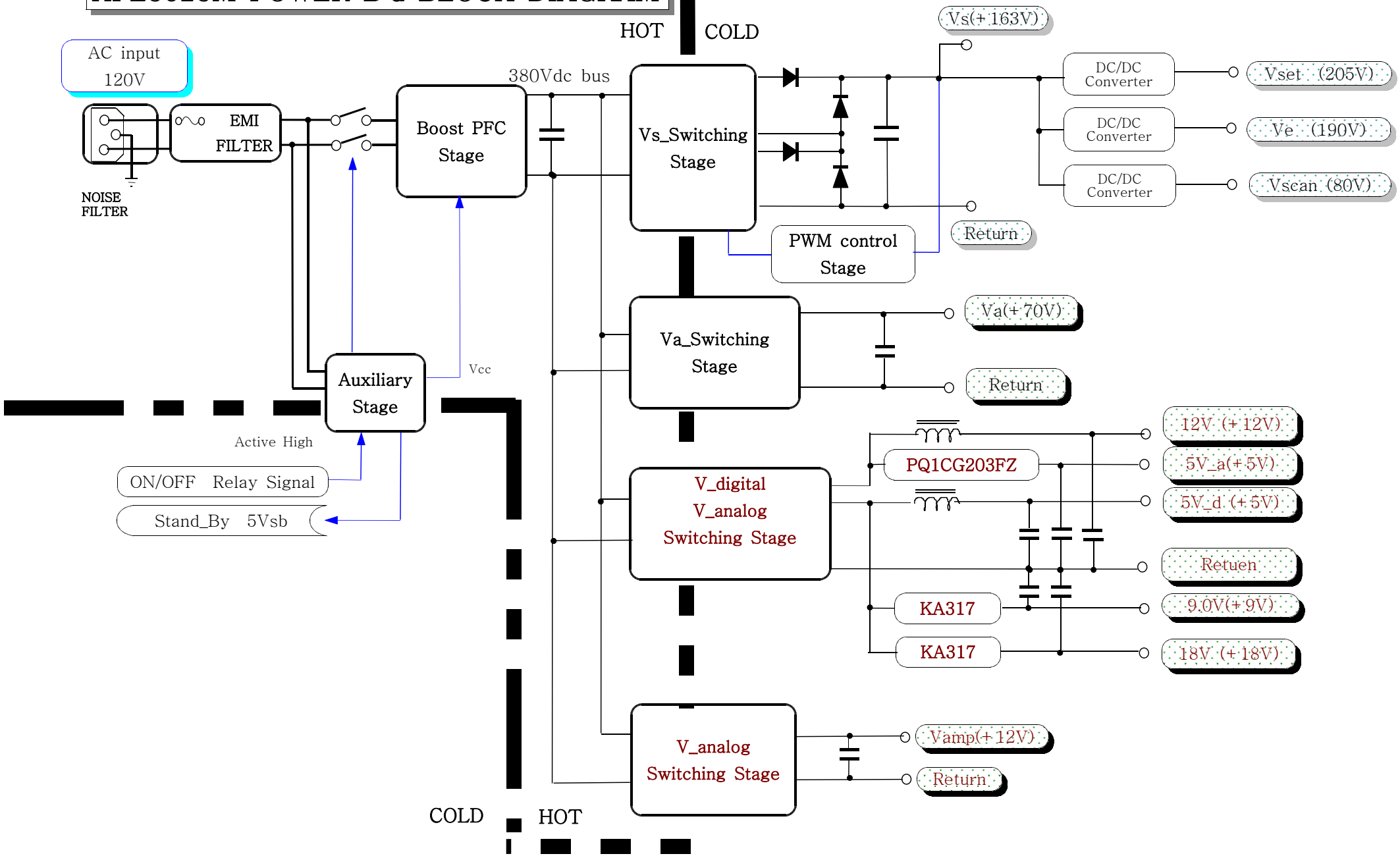

HPL5025M X DRIVER B'd BLOCK DIAGRAM

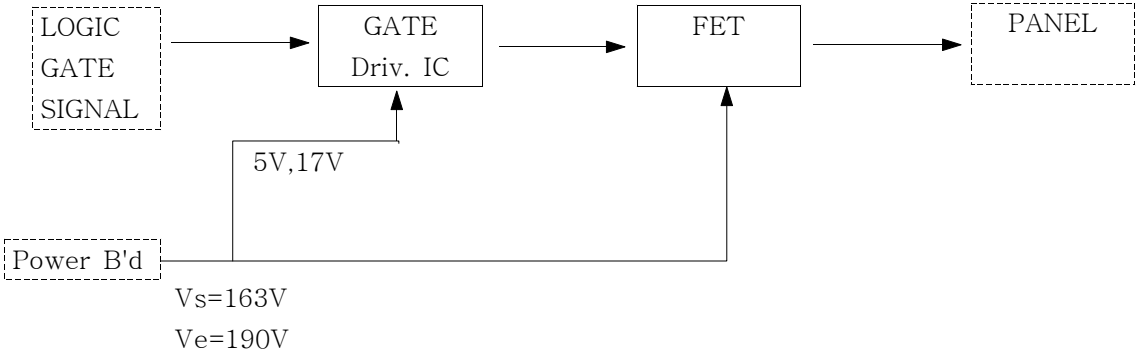

HPL5025M Y DRIVER B'd BLOCK DIAGRAM

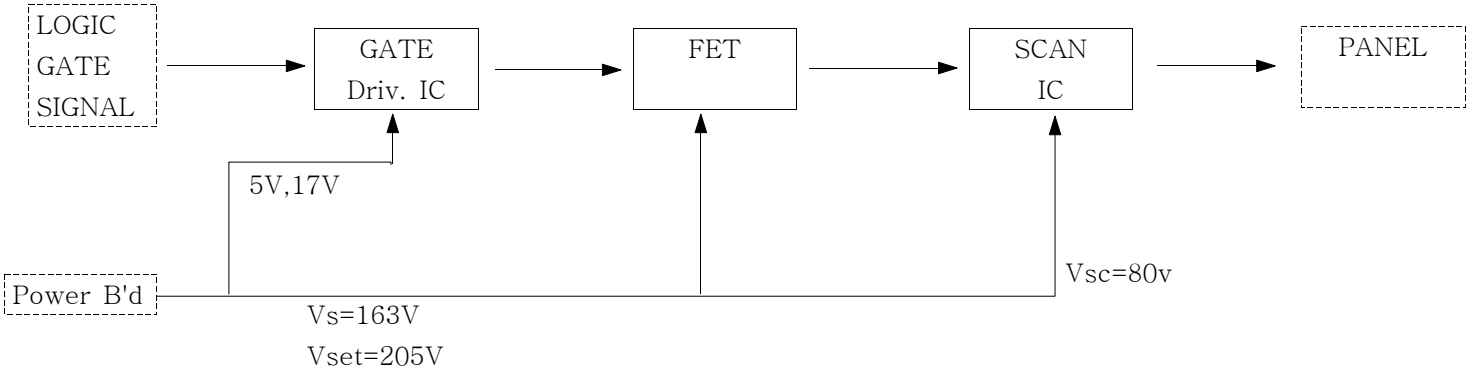

HPL5025M LOGIC IC & SIGNAL BLOCK DIAGRAM

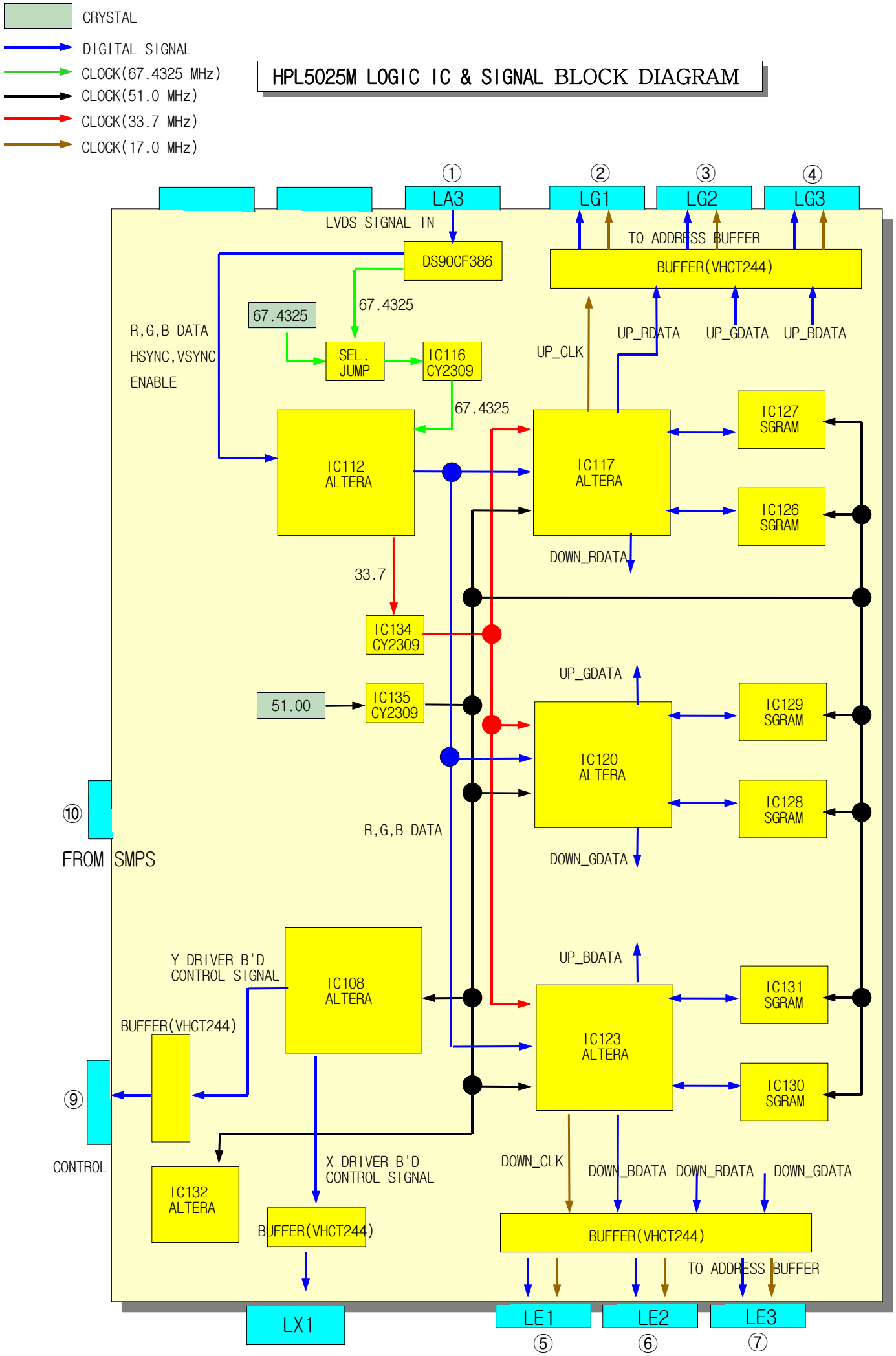
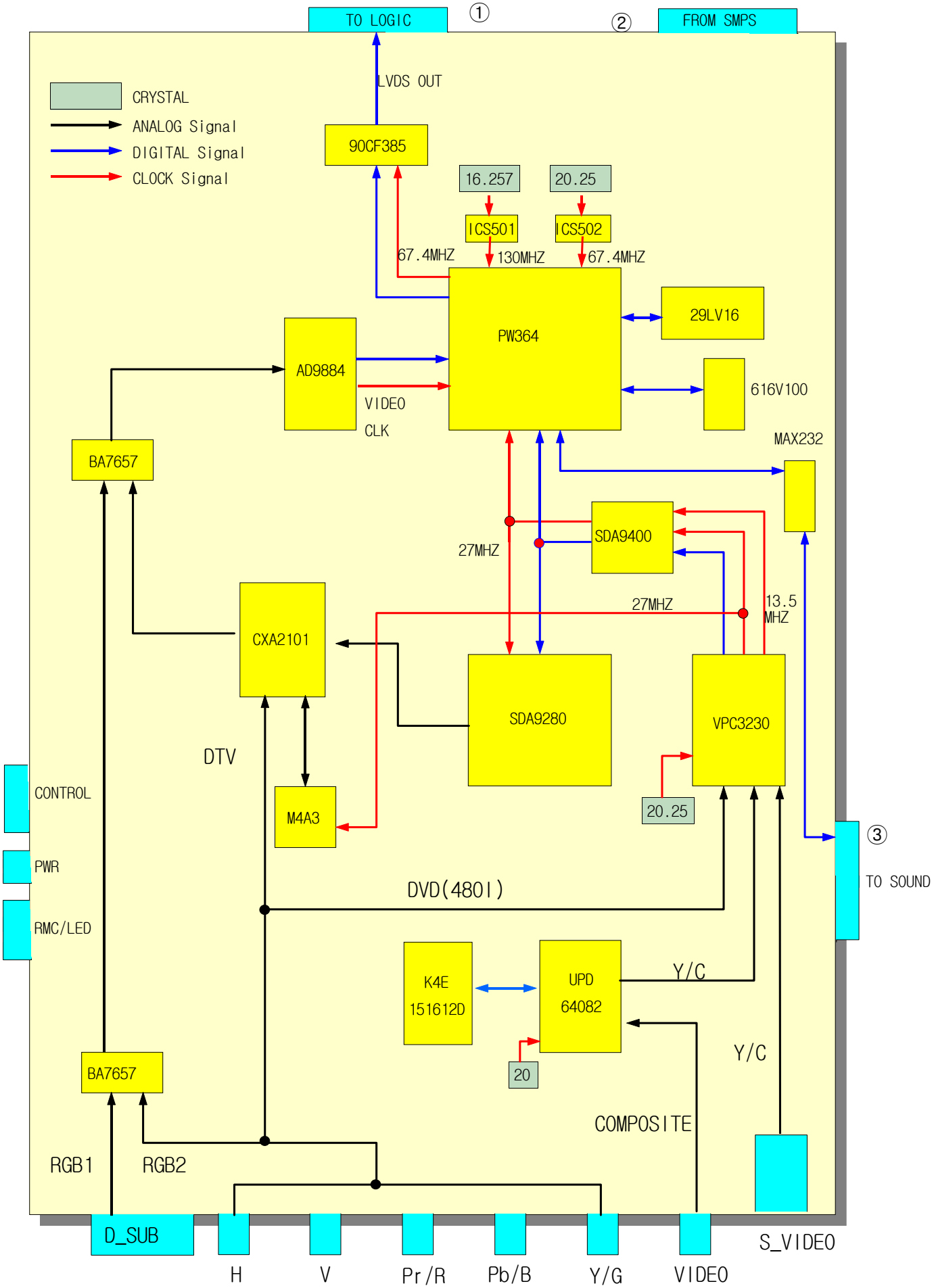
HPL5025M SCALER IC & SIGNAL BLOCK DIAGRAM