This drawing is property of SEC. Use or copy of this drawing without proper permission from the appropriate technical-document managing department is prohibited.

Rev. No

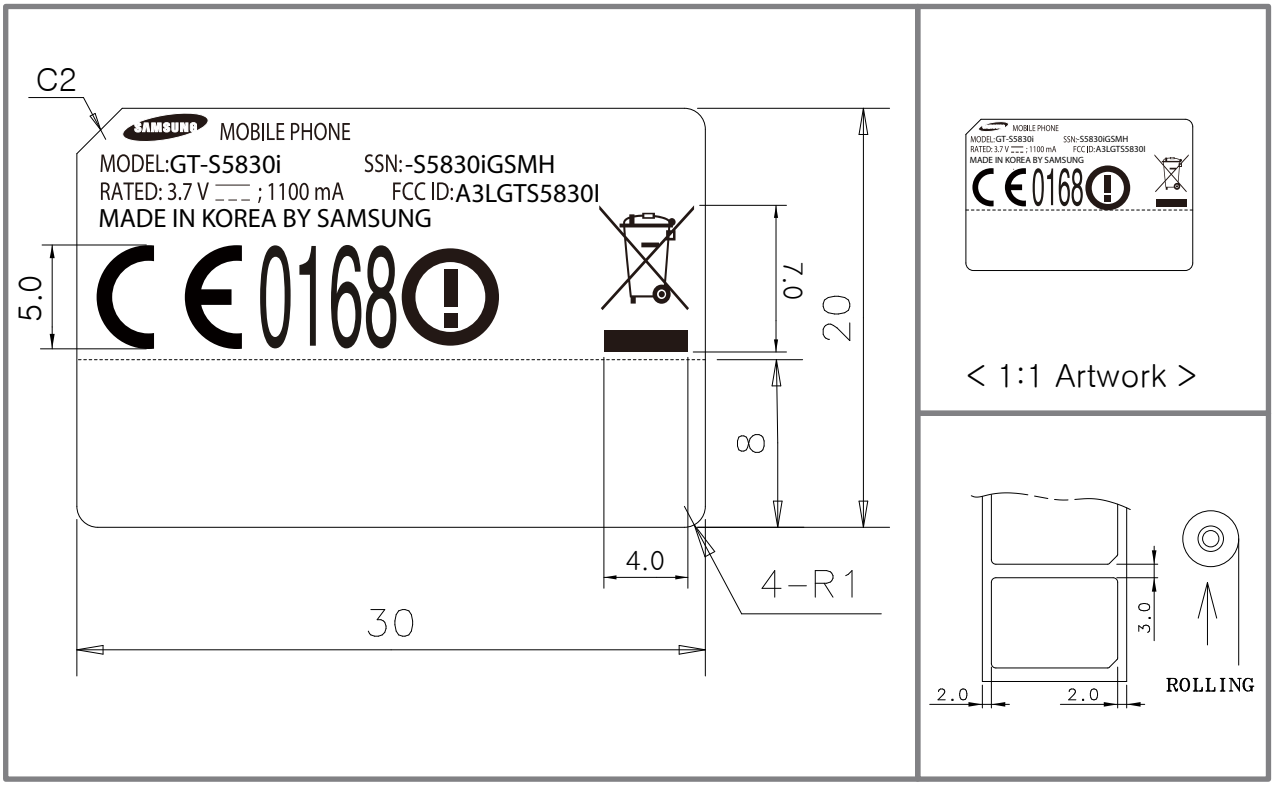

Technical Description

1. Use 'FILM' provided by 'SAMSUNG' for letter and contents
2. Background color is 'WHITE', letter color is 'BLACK'
   (reverse for SAMSUNG LOGO)
3. Back side should be attached to release paper once adhesive is applied.
4. No letter should be blur/smeared
5. The production must be proceed after the approval of R&D Group
6. The product must be within approved sample's specification tolerance.
7. The product must be finished in a ROLL
8. Release paper must be unifiedn for material and color(blue)

MAT.	WHITE POLYESTER 50μ		FIN.	Semi transparency OPP Laminating + UVP Coating		
TITLE	GT-S5830i LABEL-MAIN					
UNIT	mm	DESIGNED	CHECKED	APPROVED	PROJECTION	
TOLERANCE	+0.0 −0.1	Hong Mun Ki	Jo Kyeong Hwan	Kim June Sop		
SCALE	N/S				SHEET NO	1/1
Vendor	HANSUNG P&I	110826	110826	110826		
SAMSUNG ELECTRONICS		Doc. CODE				

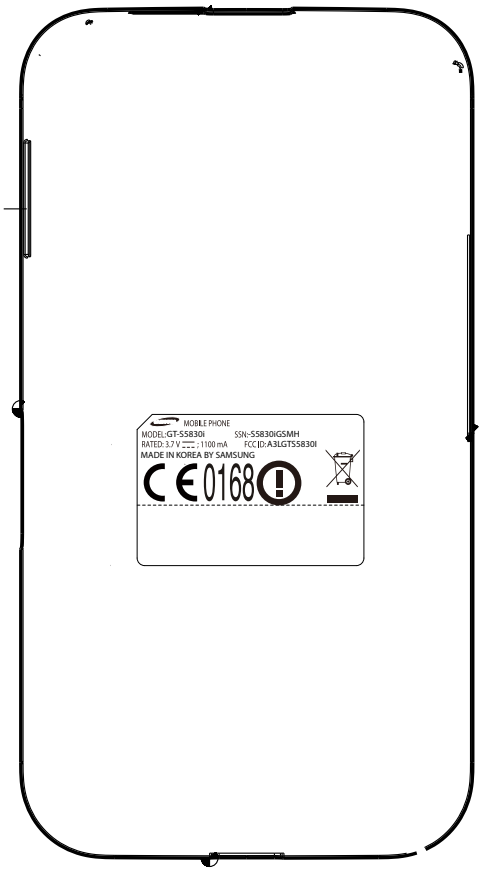

The label is placed inside the battery compartment