This drawing is property of SEC. Use or copy of this drawing without proper permission from the appropriate technical-document managing department is prohibited.

Rev. No

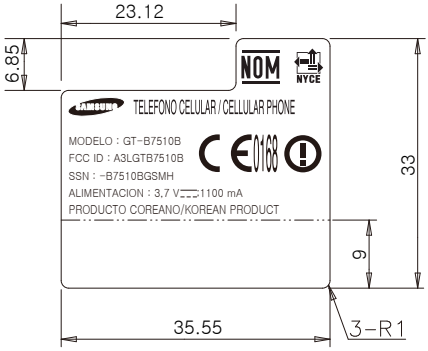

Technical Description

1. Use 'Al / PDF' provided by 'SAMSUNG' for letter and contents
2. Background color is 'WHITE', letter color is 'BLACK' (reverse for SAMSUNG LOGO)
3. Back side should be attached to release paper once adhesive is applied.
4. No letter should be blur/smeared
5. The production must be proceed after the approval of R&D Group
6. The product must be within approved sample's specification tolerance.
7. The product must be finished in a ROLL
8. Release paper must be unifiedn for material and color(blue)
9. Do not contain any substances which are specified in (OQA-2049).

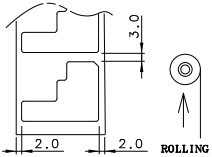

MAT.	OPP Laminating 16μ Adhesive 5μ WHITE POLYPROPYLENE 80μ Adhesive 25μ (0.137±0.01)	FIN.	Semi transparency OPP laminating + UVP Coating			
TITLE	GT-B7510B (브라질 승인용) LABEL-MAIN					
UNIT	mm	DESIGNED	CHECKED	APPROVED	PROJECTION	
TOLERANCE	+0.0 -0.1	Tae Hun Kim	Kyeong Hwan JO	June Sop Kim		
SCALE	N/S				SHEET NO	1/1
Vendor	HSINS	110114	110114	110114		
SAMSUNG ELECTRONICS		Doc. CODE	GH68-00000A			

3. FCC ID Label Location
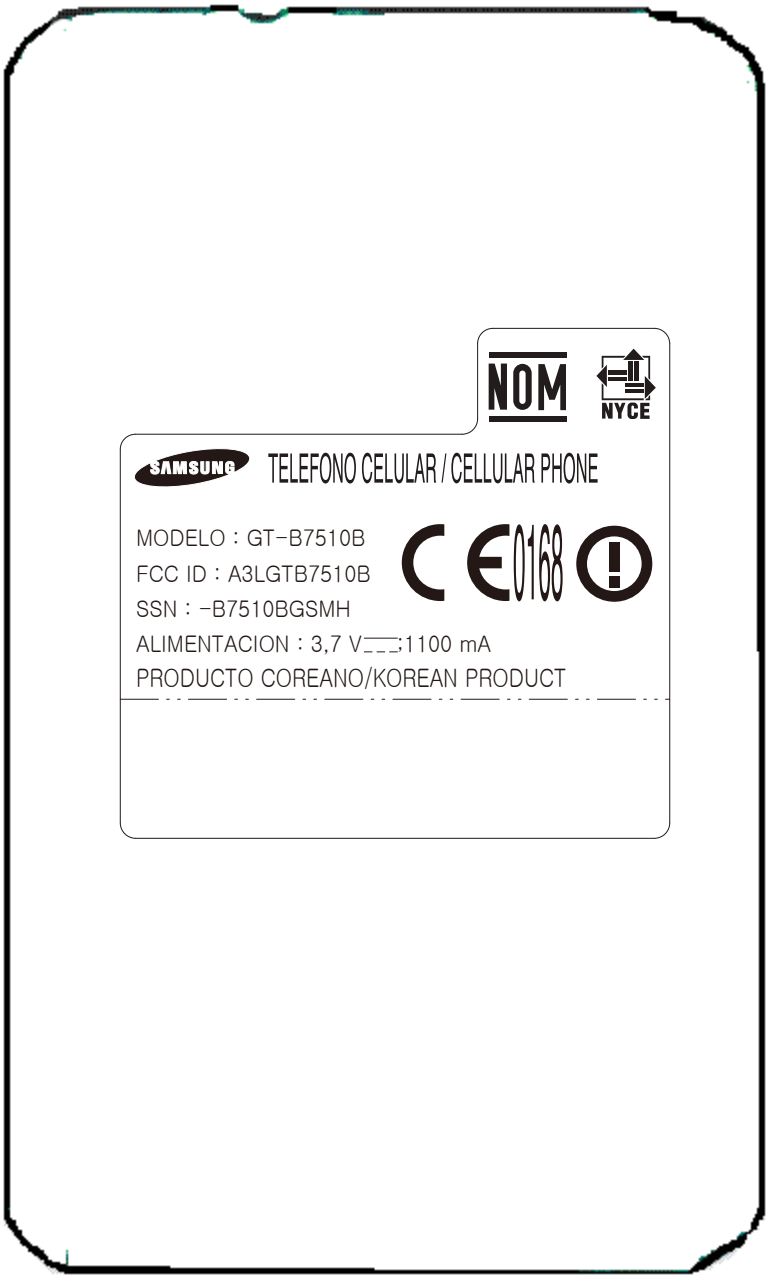
This label is placed inside the battery compartment.