This drawing is property of SEC. Use or copy of this drawing without proper permission from the appropriate technical-document managing department is prohibited.

Rev. No

Technical Description
1. Use FILM provided by SAMSUNG for letter and contents
2. Background color is White , letter color is BLACK (reverse for SAMSUNG LOGO)
3. Put Back paper on the back side after the adhesive.
4. No blur and spread for letter
5. Proceed with manufacturing process after the approval of R&D Group
6. The spec. of product must be based on approved limit samples.
7. Stock on as a ROLL
8. Follow drawing instruction above for CE or WEEE mark
9. Unify material and color as one color (blue) for glassine paper

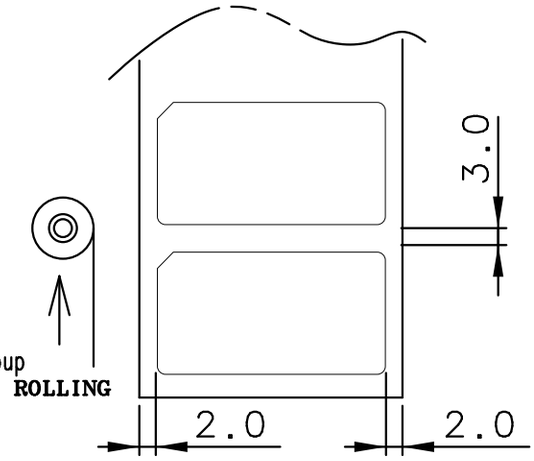

MAT.	P.P(T:0.13)		FIN.	Semitransparency OPP Lamination + UVP Coating		
TITLE	GT-B5510(LTN) LABEL(R)-MAIN					
UNIT	mm	DESIGNED	CHECKED	APPROVED	PROJECTION	
TOLERANCE	+0.0 -0.1	AN DAE GEUN	kyeonghwan jo	junesop kim		
SCALE	N/S				SHEET NO	1/1
Manufacture	HSINS	101112	101112	101112		
SAMSUNG ELECTRONICS		Doc. CODE	GH68-			