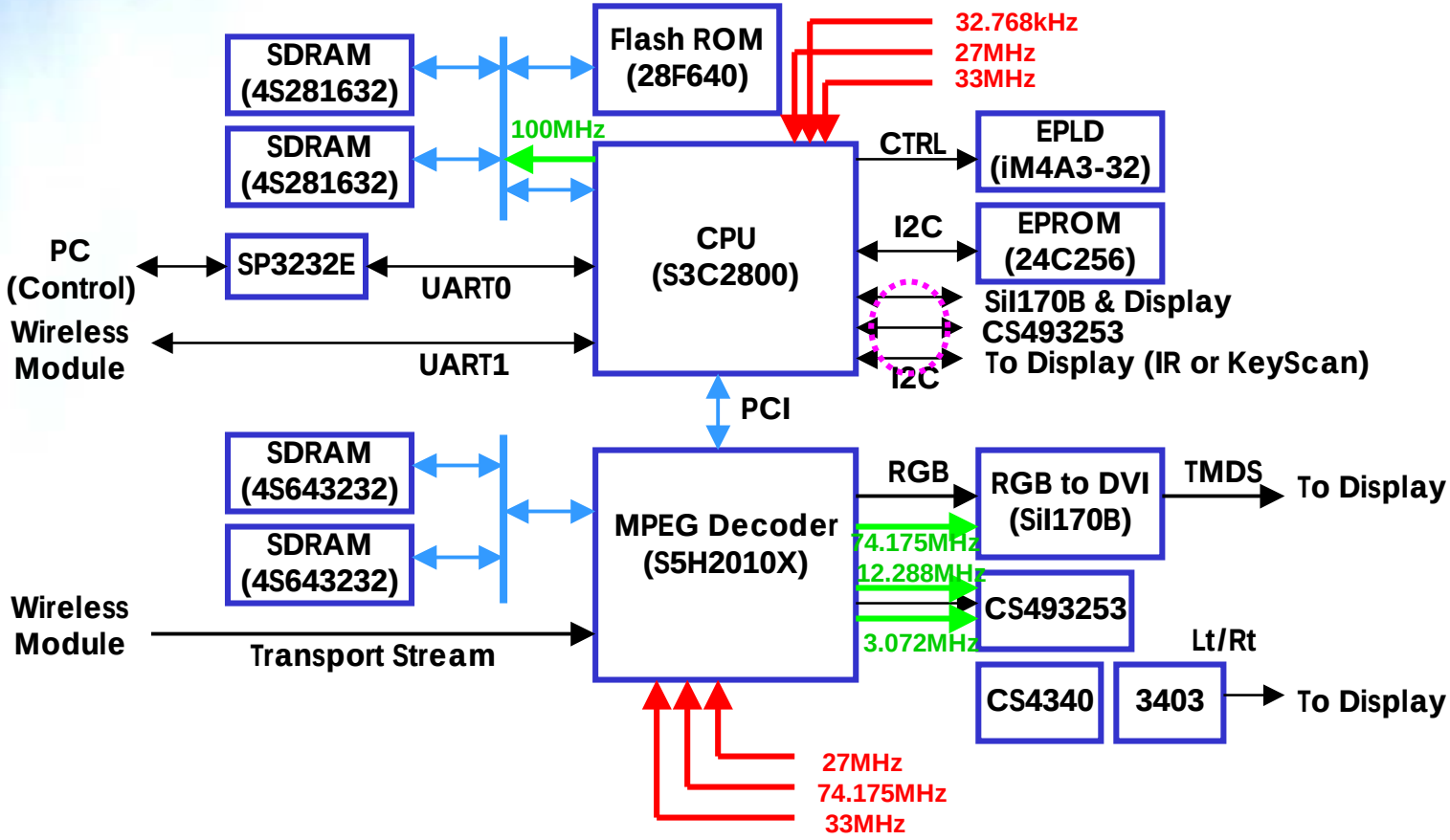• Block Diagram