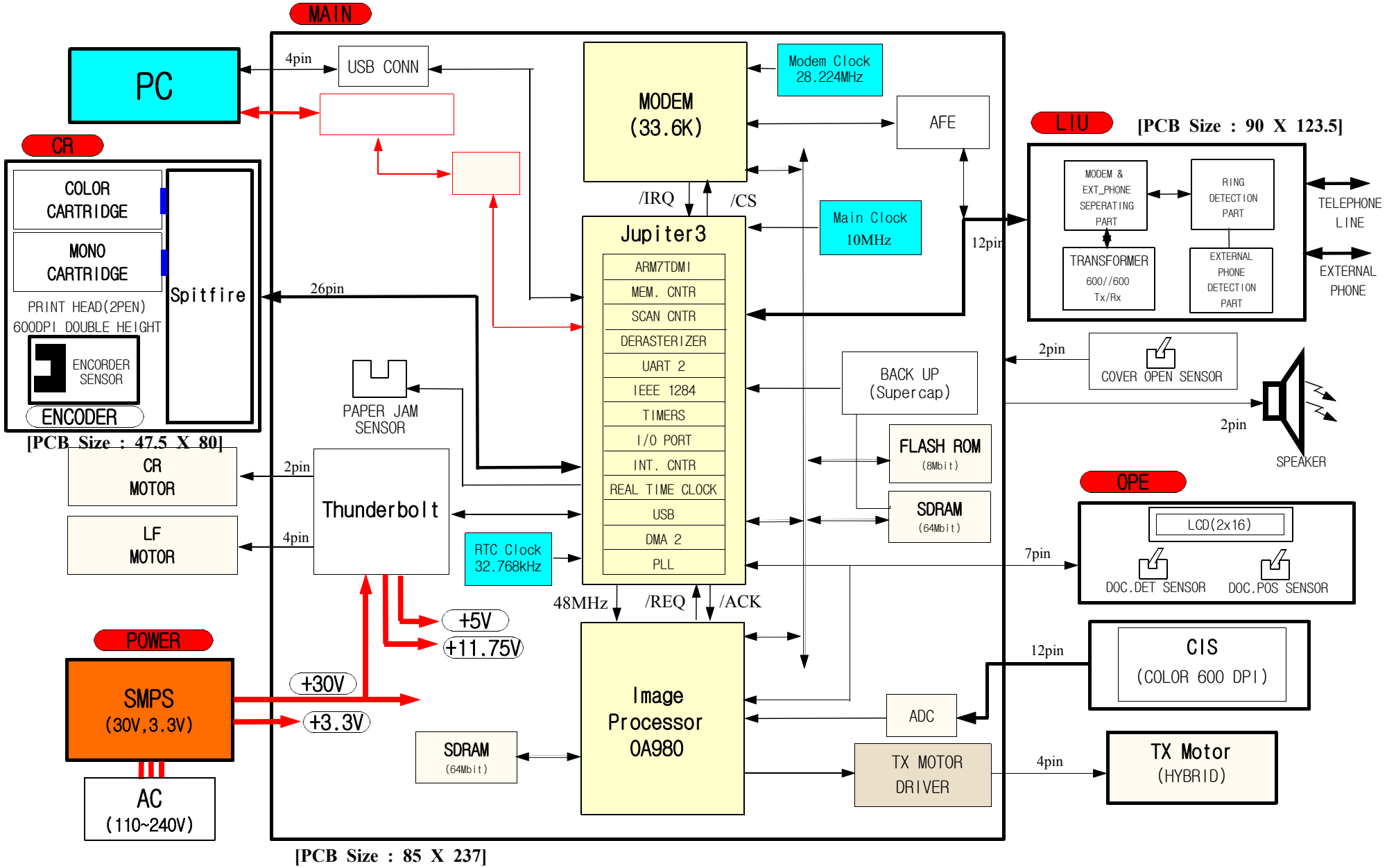SHEET-FEED "4 in 1" SYSTEM BLOCK DIAGRAM