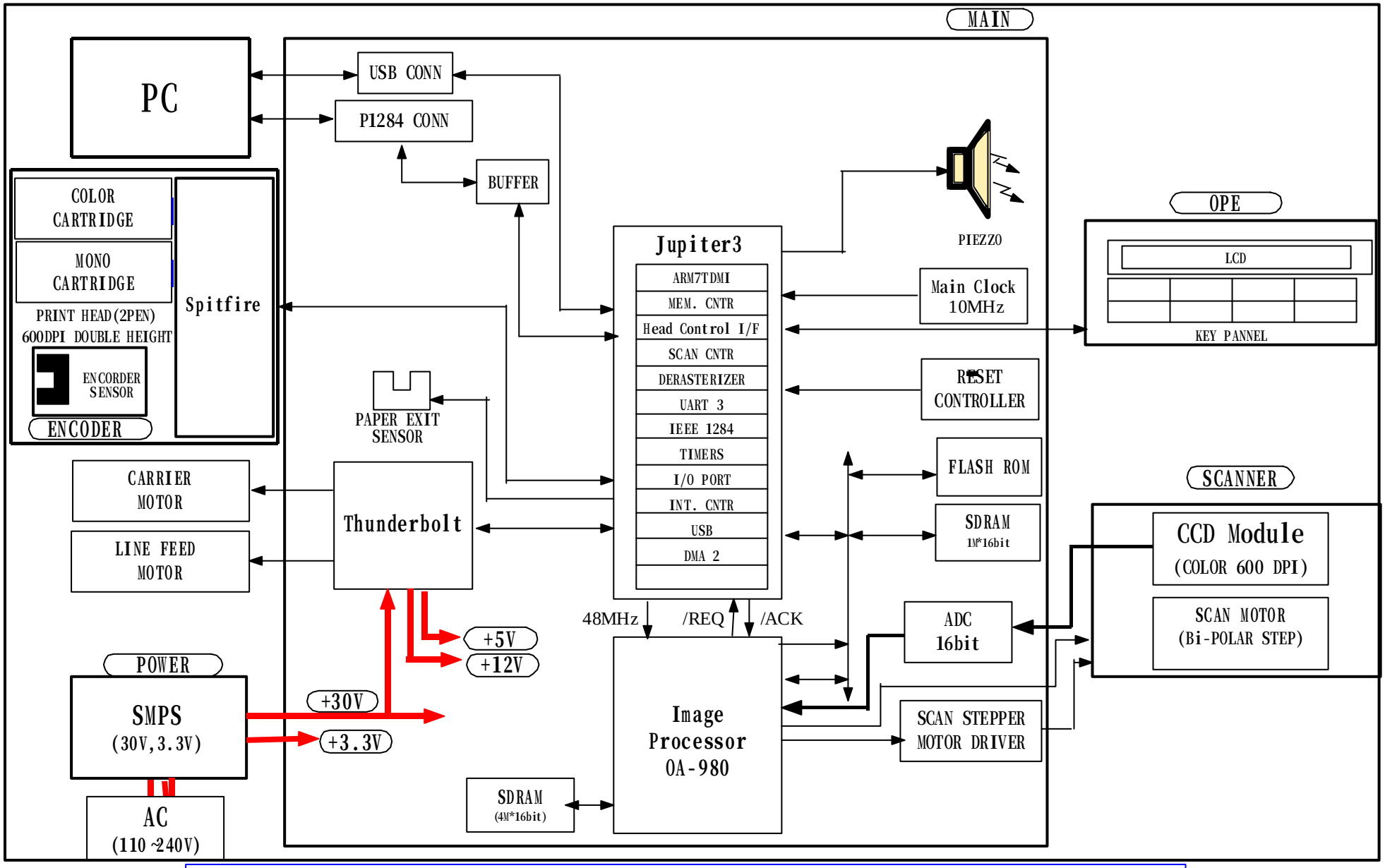

Block Diagram of A3000 Electrical Function