Exhibit 7

BLOCK DIAGRAM
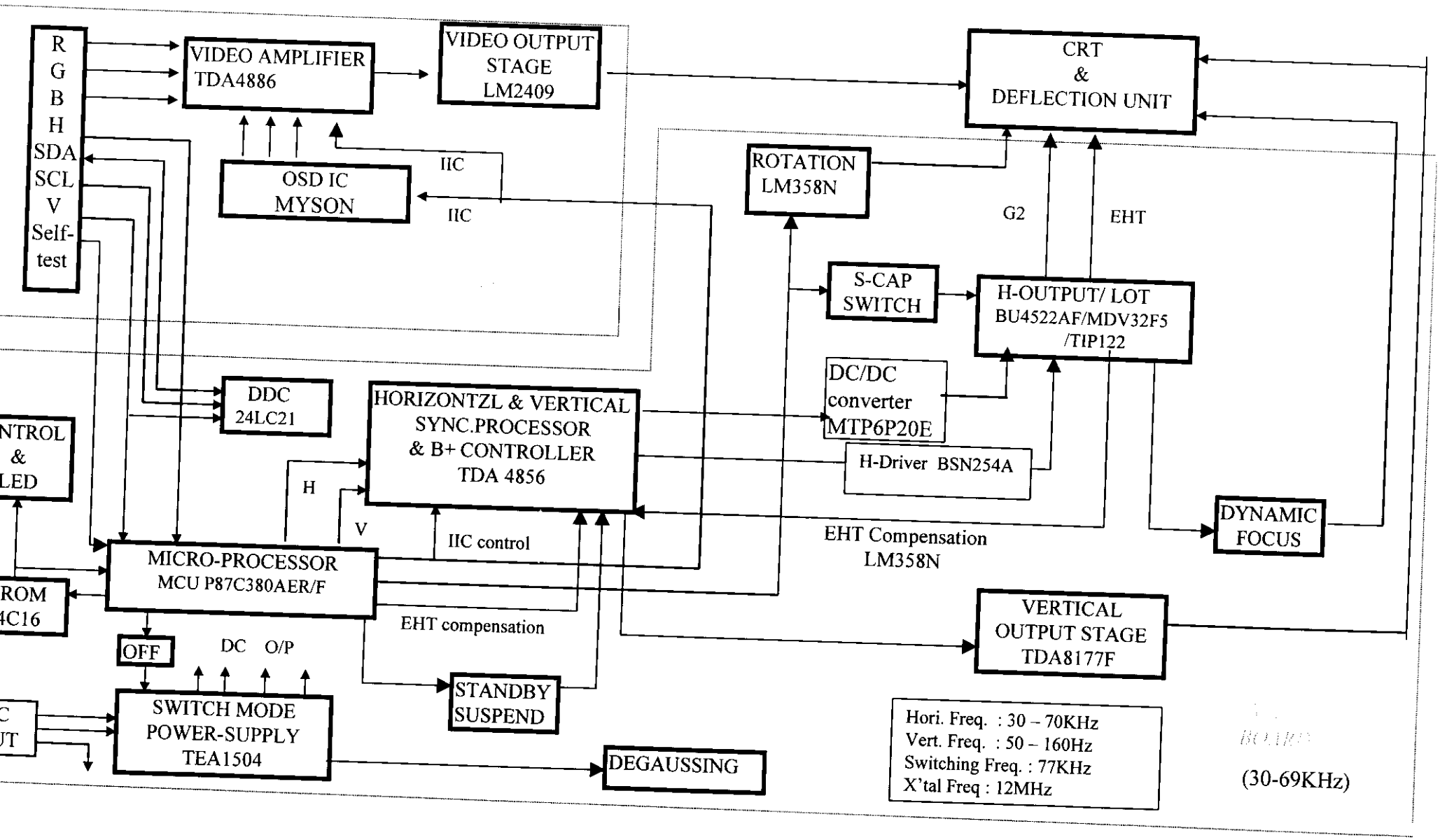
FUNCTION BLOCK OF 105B