PHILIPS

6000 series

TAPB603/37

User manual

Register your product and get support at
www.philips.com/welcome

Contents

1 Important 3
Help and support 3
Safety 3
Care for your product 4
Care of the environment 4
Caution FCC and IC statement for Users (USA and Canada only) 5
Compliance 5

2 Your Soundbar 6
Main unit 6
Wireless subwoofer 6
Remote control 6
Connectors 7
Prepare the Remote Control 8
Placement 8

3 Connect 9
Dolby Atmos® 9
Connect to HDMI (ARC) Socket 9
Connect to Optical Socket 10
Connect to AUX Socket 10
Connect to Power 10
Pair up with the subwoofer 11

4 Use your Soundbar 12
Turn ON and OFF 12
Auto Standby 12
Select Modes 12
Adjust the Volume 12
Select Equalizer (EQ) Effect 12
Adjust the Bass/Treble Level 12
Dolby sound mode 13
Set display brightness 13
Bluetooth Operation 13
AUX / OPTICAL / HDMI Operation 14
USB Operation 14

5 Wall mount 15

6 Product specifications 16

7 Troubleshooting 17

1 Important

Read and understand all instructions before you use your product. If damage is caused by failure to follow instructions, the warranty does not apply.

Help and support

For extensive online support, visit www.philips.com/welcome to:

- download the user manual and the quick start guide
- watch video tutorials (available only for selected models)
- find answers to frequently answered questions (FAQs)
- email us a question
- chat with our support representative.

Follow the instructions on the website to select your language, and then enter your product model number.

Alternatively, you can contact Consumer Care in your country. Before you contact, note down the model number and serial number of your product. You can find this information on the back or bottom of your product.

Safety

Risk of electric shock or fire!

- Before you make or change any connections, make sure that all devices are disconnected from the power outlet.
- Never expose the product and accessories to rain or water. Never place liquid containers, such as vases, near the product. If liquids are spilt on or into the product, disconnect it from the power outlet immediately. Contact Consumer Care to have the product checked before use.
- Never place the product and accessories near naked flames or other heat sources, including direct sunlight.
- Never insert objects into the ventilation slots or other openings on the product.
- Where the mains plug or an appliance coupler is used as the disconnect device, the disconnect device shall remain readily operable.
- Battery (battery pack or batteries installed) shall not be exposed to excessive heat such as sunshine, fire or the like.
- Disconnect the product from the power outlet before lightning storms.
- When you disconnect the power cord, always pull the plug, never the cable.

Risk of short circuit or fire!

- For identification and supply ratings, see the type plate at the back or bottom of the product.
- Before you connect the product to the power outlet, ensure that the power voltage matches the value printed on the back or bottom of the product. Never connect the product to the power outlet if the voltage is different.

Risk of injury or damage to this product!

- For wall mounting, this product must be securely attached to the wall in accordance with the installation instructions. Use only the supplied wall mount bracket (if available). Improper wall mounting may result in accident, injury or damage. If you have any query, contact Consumer Care in your country.
- Never place the product or any objects on power cords or on other electrical equipment.
- If the product is transported in temperatures below 5°C, unpack the product and wait until its temperature matches room temperature before connecting it to the power outlet.
- Parts of this product can be made of glass. Handle with care to avoid injury and damage.

Risk of overheating!

- Never install this product in a confined space. Always leave a space of at least four inches around the product for ventilation. Ensure curtains or other objects never cover the ventilation slots on the product.

Risk of contamination!

- Do not mix batteries (old and new or carbon and alkaine, etc.).
- CAUTION: Danger of explosion if batteries are incorrectly replaced. Replace only with the same or equivalent type.
- Remove batteries if they are exhausted or if the remote control is not to be used for a long time.
- Batteries contain chemical substances, they should be disposed of properly.

Risk of swallowing batteries!

- The product/remote control may contain a coin/button type battery, which can be swallowed. Keep the battery out of reach of children at all times! If swallowed, the battery can cause serious injury or death. Severe internal burns can occur within two hours of ingestion.
- If you suspect that a battery has been swallowed or placed inside any part of the body, seek immediate medical attention.
- When you change the batteries, always keep all new and used batteries out of reach of children. Ensure that the battery compartment is completely secure after you replace the battery.
- If the battery compartment cannot be completely secured, discontinue use of the product. Keep out of reach of children and contact the manufacturer.

This is CLASS II apparatus with double insulation, and no protective earth provided.

Care for your product

Use only microfiber cloth to clean the product.

Care of the environment

Disposal of your old product and battery

Your product is designed and manufactured with high quality materials and components, which can be recycled and reused.

This symbol on a product means that the product is covered by European Directive 2012/19/EU.

This symbol means that the product contains batteries covered by European Directive 2013/56/EU which cannot be disposed of with normal household waste.
Inform yourself about the local separate collection system for electrical and electronic products and batteries. Follow local rules and never dispose of the product and batteries with normal household waste. Correct disposal of old products and batteries helps prevent negative consequences for the environment and human health.

Removing the disposable batteries

To remove the disposable batteries, see battery installation section.

Caution FCC and IC statement for Users (USA and Canada only)

FCC INFORMATION

Warning:

- This equipment should be installed and operated with minimum distance 20cm between the radiator & your body.
- Changes or modifications to this unit not expressly approved by the party responsible for compliance could void the user's authority to operate the equipment. ''

NOTE: This equipment has been tested and found to comply with the limits for a Class B digital device, pursuant to Part 15 of the FCC Rules. These limits are designed to provide reasonable protection against harmful interference in a residential installation. This equipment generates, uses and can radiate radio frequency energy and, if not installed and used in accordance with the instructions, may cause harmful interference to radio communications.

However, there is no guarantee that interference will not occur in a particular installation. If this equipment does cause harmful interference to radio or television reception, which can be determined by turning the equipment off and on, the user is encouraged to try to correct the interference by one or more of the following measures:

- Reorient or relocate the receiving antenna.
- Increase the separation between the equipment and receiver.
- Connect the equipment into an outlet on a circuit different from that to which the receiver is connected.
- Consult the dealer or an experienced radio / TV technician for help.

This device contains licence-exempt transmitter(s)/receiver(s) that comply with Innovation, Science and Economic Development Canada's licence-exempt RSS(s). Operation is subject to the following two conditions:

1. This device may not cause interference.
2. This device must accept any interference, including interference that may cause undesired operation of the device.

Le présent appareil est conforme aux CNR d'Industrie Canada applicables aux appareils radio exempts de licence. L'exploitation est autorisée aux deux conditions suivantes :(1) l'appareil ne doit pas produire de brouillage, et (2) l'utilisateur de l'appareil doit accepter tout brouillage radioélectrique subi, même si le brouillage est susceptible d'en compromettre le fonctionnement.

IC Radiation Exposure Statement

This equipment complies with IC radiation exposure limits set forth for an uncontrolled environment. This equipment should be installed and operated with minimum distance 20cm between the radiator & your body.

Déclaration d'exposition aux radiations:

Cet équipement est conforme aux limites d'exposition aux rayonnements IC établies pour un environnement non contrôlé. Cet équipement doit être installé et utilisé avec un minimum de 20 cm de distance entre la source de rayonnement et votre corps.

Compliance

This product complies with the radio interference requirements of the European Community.
Hereby, MMD Hong Kong Holding Limited declares that this product is in compliance with the essential requirements and other relevant provisions of Directive 2014/53/EU.
You can find the Declaration of Conformity on www.p4c.philips.com.

2 Your Soundbar

Congratulations on your purchase, and welcome to Philips! To fully benefit from the support that Philips offers, register your Soundbar at www.philips.com/welcome.

Main unit

This section includes an overview of the main unit.

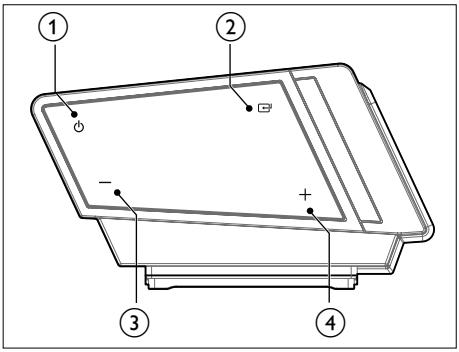

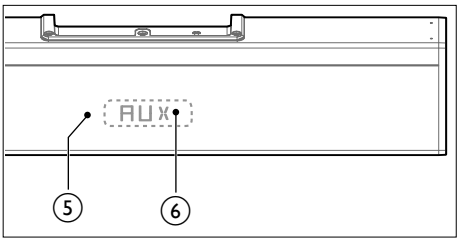

1. ⏻ (Standby-On)
   Switch the Soundbar On or to standby.
2. (Source)
   Select an input source for the Soundbar.
3. - (Volume)
   Decrease the volume.
4. + (Volume)
   Increase the volume.
5. Remote Control Sensor
6. Display panel

Wireless subwoofer

This section includes an overview of the Wireless subwoofer.

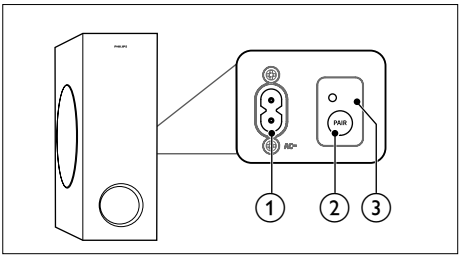

1. AC~ Socket
   Connect to the power supply.
2. PAIR button
   Press to to enter the pairing mode for the subwoofer.
3. Subwoofer indicator
   - When the power is turned on, the indicator lights up.
   - During wireless pairing between the subwoofer and the main unit, the indicator blinks orange quickly.
   - When the pairing succeeds, the indicator lights up orange.
   - When the pairing fails, the indicator blinks orange slowly.

Remote control

This section includes an overview of the remote control.

1. ⏻ (Standby-On)
   Switch the Soundbar on or to standby.
2. Source
   Select an input source for the Soundbar.

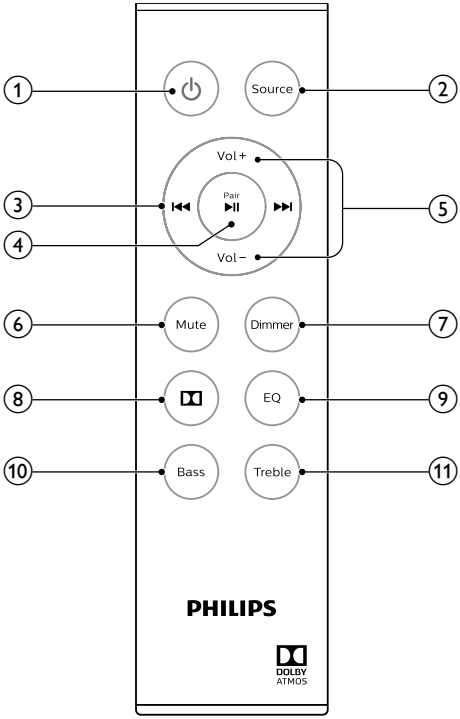

③ ⏮ / ⏭ (Previous/Next)
Skip to the previous or next track in USB/ BT mode.

④ ▶❚❚ /Pair (Play/Pause)
Start, pause or resume play in USB/BT mode.
Press and hold to activate the pairing function in Bluetooth mode or disconnect the existing paired Bluetooth device.

⑤ +/- (Volume)
Increase or decrease volume.

⑥ Mute
Mute or restore volume.

⑦ Dimmer
Set the brightness of SoundBar display panel.

⑧ (Dolby)
Turn the Dolby ON/OFF.

⑨ EQ
Select Equalizer (EQ) effect.

⑩ Bass
Activate bass setup.

⑪ Treble
Activate treble setup.

Connectors

This section includes an overview of the connectors available on your Soundbar.

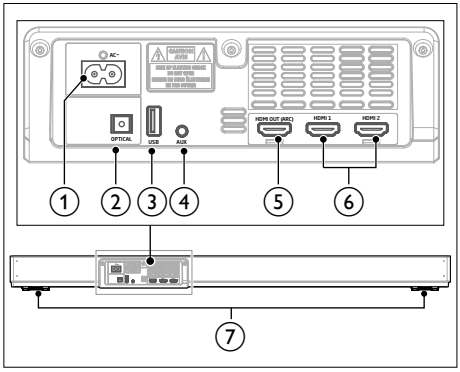

① AC~
Connect to the power supply.

② OPTICAL
Connect to an optical audio output on the TV or a digital device.

③ USB
- Audio input from a USB storage device.
- Upgrade software of this product.

④ AUX
Audio input from, for example, an MP3 player (3.5mm jack).

⑤ HDMI OUT (ARC)
Connect to the HDMI input on the TV.

⑥ HDMI 1/ HDMI 2
Connect to the HDMI input on the TV.

⑦ Wall bracket slot

Prepare the Remote Control

- The provided Remote Control allows the unit to be operated from a distance.
- Even if the Remote Control is operated within the effective range 19.7 feet (6m), remote control operation may be impossible if there are any obstacles between the unit and the remote control.
- If the Remote Control is operated near other products which generate infrared rays, or if other remote control devices using infra-red rays are used near the unit, it may operate incorrectly. Conversely, the other products may operate incorrectly.

First-time use:

The unit has a pre-installed lithium CR2025 battery. Remove the protective tab to activate the remote control battery.

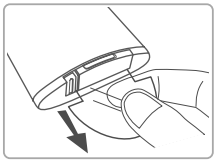

Replace the Remote Control Battery

- The remote control requires a CR2025, 3V Lithium battery.

1 Push the tab on the side of the battery tray towards the tray.

2 Now slide the battery tray out of the remote control.

3 Remove the old battery. Place a new CR2025 battery into the battery tray with the correct polarity (+/-) as indicated.

4 Slide the battery tray back into the slot in the remote control

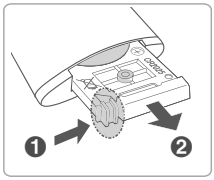

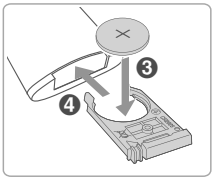

Precautions Concerning Batteries

- When the Remote Control is not to be used for a long time (more than a month), remove the battery from the Remote Control to prevent it from leaking.
- If the batteries leak, wipe away the leakage inside the battery compartment and replace the batteries with new ones.
- Do not use any batteries other than those specified.
- Do not heat or disassemble batteries.
- Never throw them in fire or water.
- Do not carry or store batteries with other metallic objects. Doing so could cause batteries to short circuit, leak or explode.
- Never recharge a battery unless it is confirmed to be a rechargeable type.

Placement

Place the subwoofer at least 1 meter (3 feet) away from your Soundbar, and ten centimeters away from the wall.
For best results, place your subwoofer as shown below.

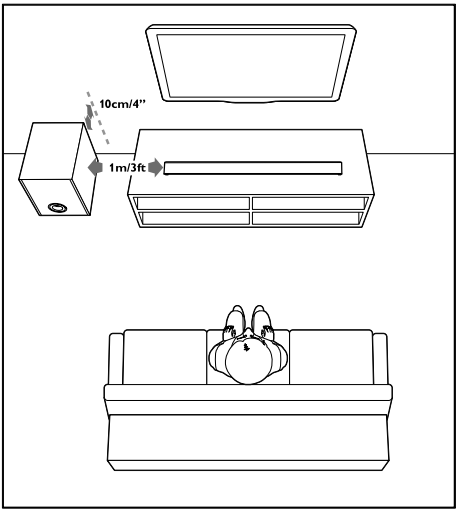

3 Connect

This section helps you connect your Soundbar to a TV and other devices, and then set it up. For information about the basic connections of your Soundbar and accessories, see the quick start guide.

Note

- For identification and supply ratings, see the type plate at the back or bottom of the product.
- Before you make or change any connections, make sure that all devices are disconnected from the power outlet.

Dolby Atmos®

Dolby Atmos gives you amazing experience you have never heard before by overhead sound, and all the richness, clarity, and power of Dolby sound.

For using Dolby Atmos®

Dolby Atmos® is available only in HDMI mode. For the details of the connection, please refer to "**HDMI Connection**".

1 To use Dolby Atmos® in HDMI 1 /HDMI 2 / HDMI ARC mode, your TV has to support Dolby Atmos®.

2 Make sure that "No Encoding" is selected for bitstream in the digital audio output of the connected external device (e.g. Blu-ray DVD player, TV etc.).

3 While entering Dolby Atmos / Dolby Digital / PCM format, the soundbar will show DOLBY ATMOS / DOLBY AUDIO / PCM AUDIO.

Note

- The full Dolby Atmos experience is only available when the Soundbar is connected to the source via a HDMI 2.0 cable.
- The Soundbar will still function when connected via other methods (such as a Digital Optical cable) but these are unable to support all of the Dolby features. Given this, our recommendation is to connect via HDMI, in order to ensure full Dolby support.

English

Connect to HDMI (ARC) Socket

Some 4K HDR TVs require the HDMI input or picture settings to be set for HDR content reception. For further setup details on HDR display, please refer to the instruction manual of your TV.

Option 1: ARC (Audio Return Channel)

Your Soundbar supports HDMI with Audio Return Channel (ARC). If your TV is HDMI ARC compliant, you can hear the TV audio through your Soundbar by using a single HDMI cable.

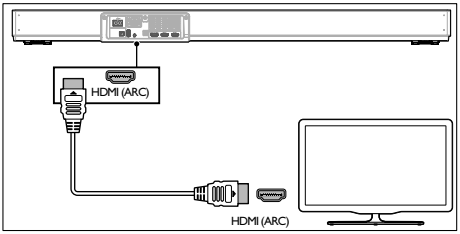

1 Using a High Speed HDMI cable, connect the **HDMI OUT (ARC)-TO TV** connector on your Soundbar to the **HDMI ARC** connector on the TV.
   - The **HDMI ARC** connector on the TV might be labeled differently. For details, see the TV user manual.

2 On your TV, turn on HDMI-CEC operations. For details, see the TV user manual.

Note

- Your TV must support the HDMI-CEC and ARC function. HDMI-CEC and ARC must be set to On.
- The setting method of HDMI-CEC and ARC may differ depending on the TV. For details about ARC function, please refer to your TV owner's manual.
- Only HDMI 1.4 compatible cables can support the ARC function.

Option 2: Standard HDMI

If your TV is not HDMI ARC-compliant, connect your soundbar to the TV through a standard HDMI connection.

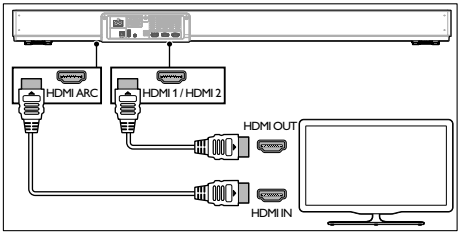

1 Use an HDMI cable (included) to connect the soundbar's HDMI OUT socket to the TV's HDMI IN socket.

2 Use an HDMI cable (included) to connect the soundbar's HDMI IN (1 or 2) socket to your external devices (e.g. games consoles, DVD players and blu ray).

Connect to Optical Socket

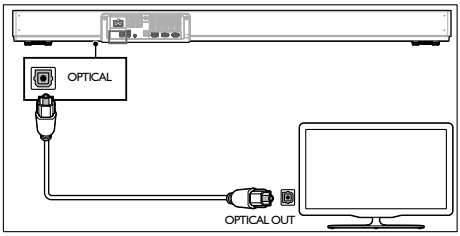

1 Using an optical cable, connect the **OPTICAL** connector on your Soundbar to the **OPTICAL OUT** connector on the TV or other device.
   - The digital optical connector might be labeled **SPDIF** or **SPDIF OUT**.

Connect to AUX Socket

- Use a 3.5mm to 3.5mm audio cable (included) to connect the TV's headphone socket to the AUX socket on the unit.

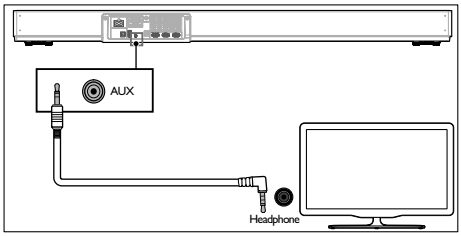

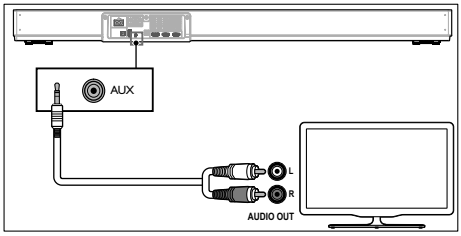

- Use a RCA to 3.5mm audio cable (not included) to connect the TV's audio output sockets to the AUX socket on the unit.

Connect to Power

- Before connecting the AC power cord, ensure you have completed all other connections.
- **Risk of product damage!** Ensure that the power supply voltage corresponds to the voltage printed on the back or the underside of the unit.

- Connect the mains cable to the AC~ Socket of the unit and then into a mains socket
- Connect the mains cable to the AC~ Socket of the subwoofer and then into a mains socket.

* Power cord quantity and plug type vary by regions.

Pair up with the subwoofer

Automatic Pairing

Plug the Soundbar and the subwoofer into the mains sockets and then press on the unit or remote control to switch the unit to **On** mode. The subwoofer and Soundbar will automatically pair.

- When the subwoofer is pairing with the Soundbar, the **Pair** indicator on the subwoofer will flash fast.
- When the subwoofer is paired with the Soundbar, the Pair indicator on the subwoofer will light up steadily.
- Do not press Pair on the rear of the subwoofer, except for manual pairing.

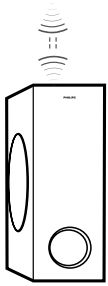

Manual Pairing

If no audio from the wireless subwoofer can be heard, manually pair up the subwoofer.

1. Unplug both units from the mains sockets again, then plug them in again after 3 minutes.
2. Press and hold the **PAIR** button on the rear of the subwoofer for a few seconds.
   ↳ The Pair indicator on the subwoofer will rapidly blink.
3. Then press ⏻ on the unit or remote control to switch the unit ON.
   ↳ The **Pair** indicator on the subwoofer will become solid when successful.
4. If the Pair indicator still keeps blinking, repeat step 1-3.

Tips

- The subwoofer should be within 6 m of the Soundbar in an open area (the closer the better).
- Remove any objects between the subwoofer and the Soundbar.
- If the wireless connection fails again, check if there is a conflict or strong interference (e. g. interference from an electronic device) around the location. Remove these conflicts or strong interferences and repeat the above procedures.
- If the main unit is not connected with the subwoofer and it is in ON mode, the word "CHECK SUBWOOFER" will show on the display and the Pair Indicator on the subwoofer will blink slowly.

4 Use your Soundbar

This section helps you use the Soundbar to play audio from connected devices.

Before you start

- Make the necessary connections described in the quick start guide and the user manual.
- Switch the Soundbar to the correct source for other devices.

Turn ON and OFF

- When you first connect the unit to the main socket, the unit will be in STANDBY mode. The STANDBY indicator will light up white.
- Press the ⏻ button on the remote control to switch the main unit ON or OFF.
- Disconnect the main plug from the main socket if you want to switch the unit off completely.
- If a TV or an external device (Only for AUX socket) is connected, the unit will switch on automatically when the TV or the external device is switched on.

Auto Standby

The unit automatically turns to Standby mode after about 15 minutes if the TV or the external unit is disconnected, switched off.

- To switch the unit off completely, remove the mains plug from the mains socket.
- Please turn the unit off completely to save energy when not in use.

Select Modes

1 Press the button repeatedly on the unit or press the **Source** button on the remote control to select the **AUX**, **OPTICAL**, **HDMI ARC, HDMI 1, HDMI 2**, **BT**, **USB** mode.
   ↳ The selected mode will show on the display.

Adjust the Volume

1 Press **Vol+/Vol-** (**Volume**) to increase or decrease a volume level.
   - To mute sound, press **Mute**.
   - To restore the sound, press **Mute** again or press **Vol+/Vol-** (**Volume**).

Select Equalizer (EQ) Effect

Select predefined sound modes to suit your video or music.

1 Press the **EQ** button on the remote control to select your desired preset equalizer effects: **Movie/Music/News**:
   - **Movie -** for viewing movies
   - **Music -** for listening to music
   - **News -** for listening to news

Adjust the Bass/Treble Level

1 Press the **Bass** or **Treble** button on the remote control.
   ↳ The display will show **BASS / TREB.**

2 Press the **Vol+/Vol–** button repeatedly to adjust the bass/treble level.
   ↳ bass + 5 / bass – 5
   treble +5 / treble –5

3 After about 5 seconds, the unit will exit from bass/treble setting.
   ↳ The display will show the current selected mode.
   ↳ You may now press the **Vol+/Vol–** button to adjust volume.

Dolby sound mode

Experience an immersive audio experience with Dolby sound modes.

1 Press DD button on the remote control to turn Dolby mode on or off.
   - **On**: Create a Dolby listening experience.
   - **Off**: Two-channel stereo sound. Ideal for listening to music.

Set display brightness

You can press **Dimmer** repeatedly to select a different brightness level of the display panel on this product.

Bluetooth Operation

Through Bluetooth, connect the Soundbar with your Bluetooth device (such as an iPad, iPhone, iPod touch, Android phone, or laptop), and then you can listen to the audio files stored on the device through your Soundbar speakers.

What you need

- A Bluetooth device which supports Bluetooth profile A2DP, AVRCP and with Bluetooth version as 4.2 + EDR.
- The maximum operational range between the Soundbar and a Bluetooth device is approximately 10 meters (30 feet).

1 Press the ⇄ button repeatedly on the unit or press the **Source** button on the remote control to switch the Soundbar to Bluetooth mode.
   ↳ **NO BT** is displayed on the display panel.

2 On the Bluetooth device, switch on Bluetooth, search for and select **PHILIPS TAPB603/37** to start connection (see the user manual of the Bluetooth device on how to enable Bluetooth).

3 Wait until you hear "**Paired**" voice prompt from the Soundbar.
   ↳ If the successfully connected, **BT** is displayed on the display panel.

4 Select and play audio files or music on your Bluetooth device.
   - During play, if a call is coming, music play is paused. Play resumes when the call ends.
   - If your Bluetooth device supports AVRCP profile, on the remote control you can press **⏮** / **⏭** to skip to a track, or press **▶II /Pair** to pause/ resume play.

5 To exit Bluetooth, select other source.
   - When your switch back to Bluetooth mode, Bluetooth connection remains active.

Note

- The music streaming may be interrupted by obstacles between the device and Soundbar, such as wall, metallic casing that covers the device, or other devices nearby that operate in the same frequency.
- If you want to connect your Soundbar with another Bluetooth device, press and hold **▶II/Pair** on the remote control to disconnect the currently connected Bluetooth device.

AUX / OPTICAL / HDMI Operation

Ensure that the unit is connected to the TV or audio device.

1 Press the button repeatedly on the unit or press the **Source** button on the remote control to select the **AUX**, **OPTICAL**, **HDMI ARC, HDMI 1, HDMI 2** mode.

2 Operate your audio device directly for playback features.

3 Press the **VOL +/–** buttons to adjust the volume to your desired level.

Tip

- While in OPTICAL/HDMI ARC mode, if there's no sound output from the unit and the status Indicator flashes, you may need to activate **PCM** or **Dolby Digital** Signal output on your source device (e.g. TV, DVD or Blu-ray player).
- The unit may not be able to decode all digital audio formats from the input source. In this case, the unit will mute. This is NOT a defect. Ensure that the audio setting of the input source (e.g. TV, game console, DVD player, etc.) is set to PCM or Dolby Digital (Refer to the user manual of the input source device for its audio setting details) with HDMI 1 / HDMI 2 / HDMI ARC / optical input.
- In HDMI mode, when the DOLBY ATMOS audio format is entered, the Soundbar display shows DOLBY ATMOS.
- When the DOLBY DIGITAL audio format is entered, the Soundbar display shows DOLBY AUDIO.
- When the PCM audio format is entered, the Soundbar display shows PCM AUDIO.
- When entering non-PCM or DOLBY DIGITAL audio formats, if there's no sound output from the unit and the display show NO SUPPORT.

USB Operation

Enjoy audio on a USB storage device, such as an MP3 player and USB flash memory, etc.

1 Insert the USB device.

2 Press the button repeatedly on the unit or press the **Source** button on the remote control to select the **USB** mode.

3 During playback:

Button	Action
▶II	Start, pause or resume play.
I◀◀ / ▶▶I	Skip to the previous or next track.

Tips

- The unit can support USB devices with up to 32 GB of memory.
- This unit can play MP3 / WAV / WMA.
- Support a USB port: 5V ⎓, 500mA.

5 Wall mount

Note

- Improper wall mounting may result in accident, injury or damage. If you have any query, contact Consumer Care in your country.
- Before wall mounting, make sure the wall can support the weight of your Soundbar.
- Before wall mount, you need not remove the four rubber feet at the bottom of the Soundbar, otherwise the rubber feet cannot be fixed back.

Screw length/diameter

Depending on the type of wall mounting your Soundbar, make sure that you use screws of a suitable length and diameter.

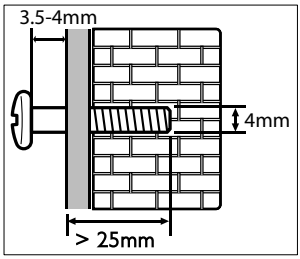

See the illustration in the quick start guide on how to wall mount the Soundbar.

1) Drill two holes on the wall.
2) Secure the dowels and screws in the holes.
3) Hang the Soundbar on the fastening screws.

6 Product specifications

Note

- Specifications and design are subject to change without notice.

Bluetooth / Wireless

- Bluetooth profiles: A2DP, AVRCP
- Bluetooth version: 4.2 + EDR
- Frequency band/Output power: 2402 MHz ~ 2480 MHz / 0 dBm(Max)
- 5.8G wireless frequency range: 5730 MHz ~ 5845 MHz
- 5.8G wireless maximum power: -5 dBm

Main unit

- Power Supply: 100-240V~ 50/60Hz
- MAX Output Power by speaker: 25W x 4 + 50W x 2
- Power Consumption: 25 W
- Standby Consumption: < 0.5 W
- USB: 5V ⎓ 500mA
- Frequency Response: 120Hz - 20KHz
- Audio input Sensitivity (AUX): 500mV
- Speakers Impedance: 8Ω x 2 + 4Ω
- Dimension (W x H x D): 950 x 75 x 134 mm
- Weight: 3.2 kg
- Operating temperature: 0°C - 45°C

Subwoofer

- Power Supply: 100-240 V~, 50-60 Hz
- Output Power: 120 W
- Power Consumption: 20 W
- Standby power consumption: < 0.5 W
- Frequency Response: 40Hz - 120Hz
- Impedance: 3 Ω
- Dimensions (W x H x D): 150 x 412 x 310 mm
- Weight: 5.7 kg
- Operating temperature: 0°C - 45°C

Remote control

- Distance/Angle: 6m/30°
- Battery Type: CR2025

7 Troubleshooting

Warning

- Risk of electric shock. Never remove the casing of the product.

To keep the warranty valid, never try to repair the product yourself.
If you have problems using this product, check the following points before you request service.
If you still have a problem, get support at www.philips.com/welcome.

No power

- Ensure that the AC cord is properly connected.
- Ensure that there is power at the AC outlet.
- Press standby button on the remote control or Soundbar to turn the Soundbar on.

No sound

- Increase the volume. Press Volume Up on the remote control or on the Soundbar.
- Press MUTE on the remote control to ensure the Soundbar is not muted.
- Press source buttons to select a different input source.
- When using either of the Digital input, if there is no audio:
  - Try setting the TV output to PCM or
  - Connect directly to your Blu-ray/other source, some TVs do not pass through digital audio.
- Your TV may be set to variable audio output. Confirm that the audio output setting is set to FIXED or STANDARD, not VARIABLE. Consult your TV's user manual for more detailed information.
- If using Bluetooth, ensure that the volume on your source device is turned up and that the device is not muted.

Remote control does not work

- Before you press any playback control button, first select the correct source.
- Reduce the distance between the remote control and the unit.
- Insert the battery with its polarities (+/-) aligned as indicated.
- Replace the battery.
- Aim the remote control directly at the sensor on the front of the unit.

I can't find the Bluetooth name of this unit on my Bluetooth device

- Ensure the Bluetooth function is activated on your Bluetooth device.
- Re-pair the unit with your Bluetooth device.

This is a 15 mins power off function, one of the ERPII standard requirement for saving power

- When the unit's external input signal level is too low, the unit will be turned off automatically in 15 minutes. Please increase the volume level of your external device.

The subwoofer is idle or the indicator of subwoofer do not light up

- Please unplug power cord from the mains sockect, and plug it in again after 3 minutes to resent the subwoofer.

产品中有害物质的名称及含量
Names and Contents of Hazardous Substances

部件名称 Name of the parts	有害物质 Hazardous Substance					
	铅 (Pb)	汞 (Hg)	镉 (Cd)	六价铬 (Cr (VI))	多溴联苯 (PBB)	多溴二苯醚 (PBDE)
Housing 外壳	○	○	○	○	○	○
Subwoofer 超重低音箱	×	○	○	○	○	○
Loudspeakers 喇叭单元	○	○	○	○	○	○
PWBs 电路板组件	×	○	○	○	○	○
Accessories (Remote control & cables) 附件（遥控器，电源线，连接线）	×	○	○	○	○	○
Batteries in Remote Control (ZnC) 遥控器电池	×	○	○	○	○	○

本表格依据 SJ/T 11364 的规定编制。
The table is formulated according to SJ/T 11364.

○：表示该有害物质在该部件所有均质材料中的含量均在 GB/T 26572 规定的限量要求以下。
○: Indicates that this hazardous substance contained in all of the homogeneous materials for this part is below the limit requirement in GB/T 26572.

×：表示该有害物质至少在该部件的某一均质材料中的含量超出 GB/T 26572 规定的限量要求。
×: Indicates that this hazardous substance contained in at least one of the homogeneous materials used for this part is above the limit requirement in GB/T 26572.

环保使用期限 Environmental Protection Use Period

此标识指期限（十年），电子电气产品中的有害物质在正常使用的条件下不会发生外泄或突变，用户使用该电子电气产品不会对环境造成严重污染或对其人身、财产造成严重损害的期限。

This logo refers to the period (10 years) during which the hazardous substances in electronic and electrical products will not leak or mutate so that the use of these [substances] will not result in any severe environmental pollution, any bodily injury or damage to any assets.

The Bluetooth® word mark and logos are registered trademarks owned by Bluetooth SIG, Inc.

The terms HDMI, HDMI High-Definition Multimedia Interface, and the HDMI Logo are trademarks or registered trademarks of HDMI Licensing Administrator, Inc.

Manufactured under license from Dolby Laboratories. Dolby, Dolby Atmos, Dolby Audio and the double-D symbol are trademarks of Dolby Laboratories.

Specifications are subject to change without notice.

Philips and Philips Shield Emblem are registered trademarks of Koninklijke Philips N.V. and are used under license. This product has been manufactured by and is sold under the responsibility of MMD Hong Kong Holding Limited. or one of its affiliates, and MMD Hong Kong Holding Limited. is the warrantor in relation to this product.

Manufacturer information

Manufacturer : MMD HONG KONG HOLDING LIMITED.

Address: UNITS 1006-1007,10/F, C-BONS INTERNATIONAL CENTER
108 WAI YIP STREET, KWUN TONG KOWLOON HONG KONG

Hereby, MMD HONG KONG HOLDING LIMITED, declares that this TAPB603/37 is in compliance with the essential requirements and other relevant provisions of Directive 2014/53/EU.