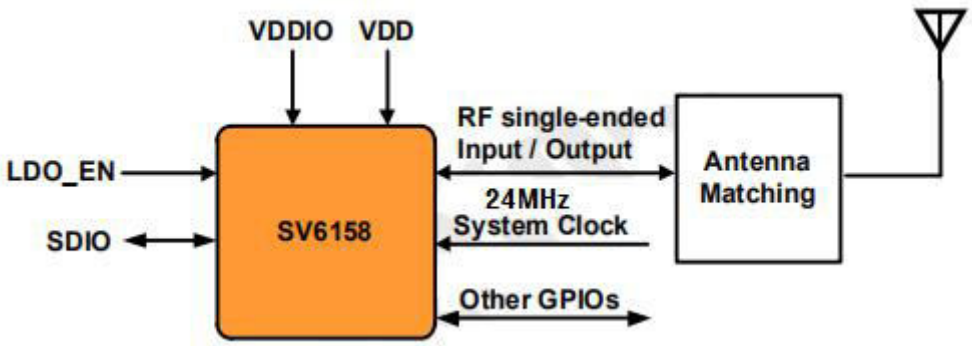Block Diagram: