Product specification

Name	Shenzhen Freilin electronic Technology Co.,LTD	Customer Part Number			
P/N	TD-HBY20240524001-43.5开双槽L=40MM	Spec number	20240524001	versions	001

♦、size

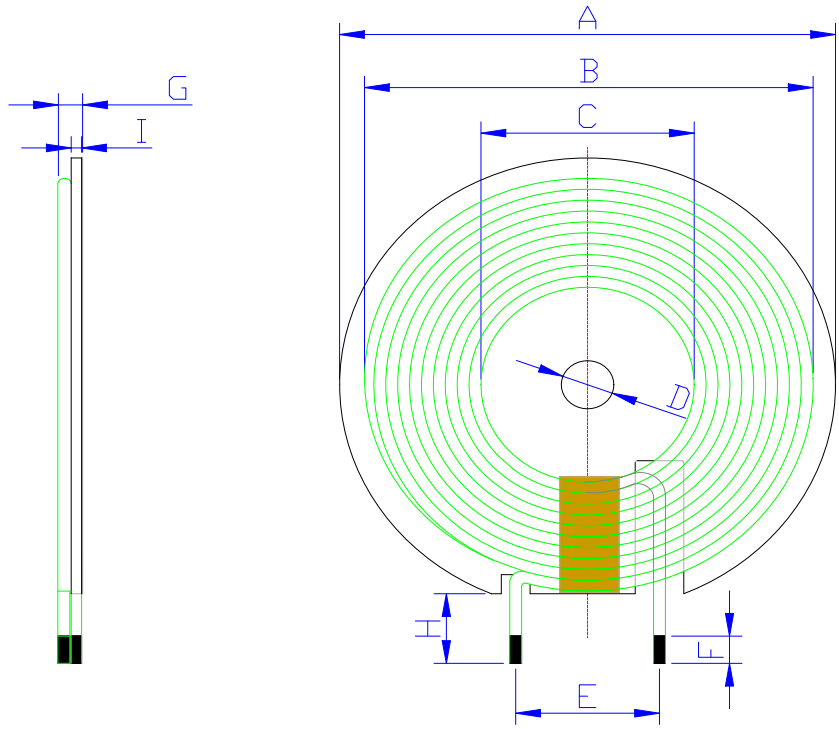

(Unit: mm)	
A	43.5 ±0.5
B	39.5 ±1
C	20.5 ±0.5
D	5.3
E	15.0 ref
F	3 ±1
G	1.7 Max
H	50.0 ±2
I	0.60 ±0.1

(1)线径: 0.08*24P裸铜线
(2)绕线圈数:10TS
(3)起尾线是否交叉: 是
(4)线圈包8mm宽高温胶带
(5)线圈与磁片需粘贴居中
(6)磁片背面42带白圆背胶

♦、**electrical specification:**

参数	规格		测试条件	测试仪器
L0	6.5 ±10%	μH	100KHz/1V	■TH1816B
Q	>40	min	100KHz/1V	■TH1816B
DCR	<50	mΩ	@ 25℃	■CH-502BC

♦、**temperature grade:**

temperature	-40℃~ 125℃

♦、**bill of materials:**

No.	Name	material specification	supplier	Remark
1	magnetic sheet	43.5*5.3*0.6T 开双槽	PC95猛锌	
2	copper line	0.08*24P裸铜线		裸铜线
3	高温胶带	8MM	环保胶带	
4	Tin	107H	千岛环保锡	
5	glue	黄胶	环保胶水	
6	double			

authorized	check	approve
Xiaoshu	Pengyong	ZhuHui