REV	ECO NO	DESCRIPTION	APPVD	DATE
A0				2024.07.16

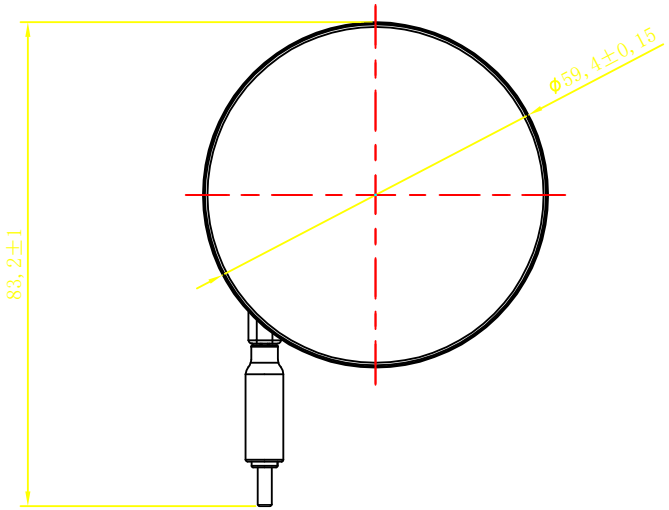

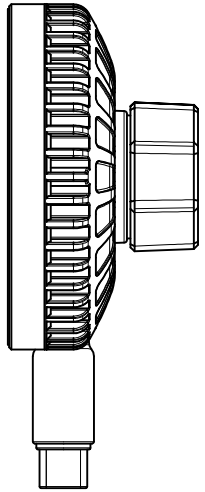

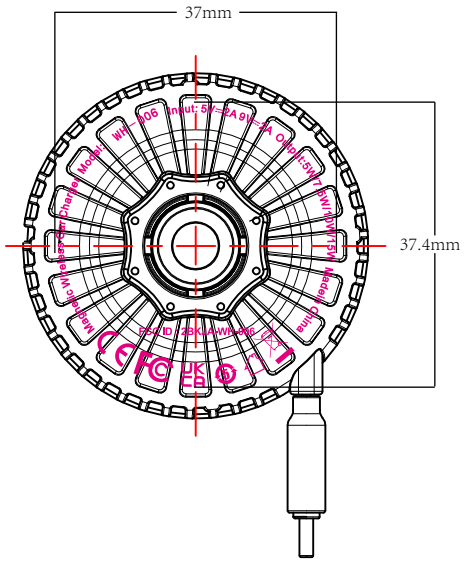

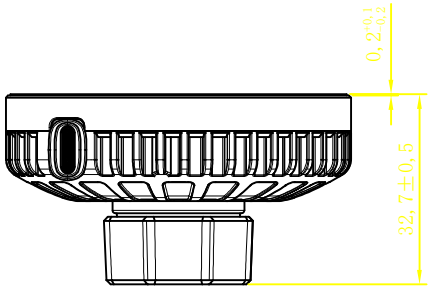

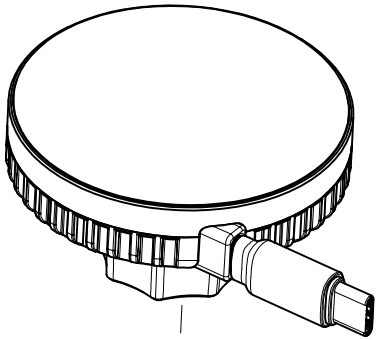

Note:
1. T1 load meter (15W) test 9V/1.66A, T2 real machine test with IP11 + Apple 12 + mobile phone test, with the PD charger supporting 18W fast charge above
2. The finished product is loaded into the blister tray; 30pcs/ blister tray;
3. Packing 5 layers/box; 150pcs/ box;
4. Finished product reliability test:
The magnetic force of the finished product should reach more than 1.3KG, and the electrical performance should refer to the customer's electrical performance reliability standard.

TOLERANCES		COMPONENT NO: WH-006	DONG GUAN CITY RONG HE ELECTRONIC.,LTD	
X.	+ 0.5mm - 0.5mm	APPROVED:	CUSTOMER P/N:Retractable line MagSafe car wireless charge	
X . X	+ 0.2mm - 0.2mm	CHECKED:	SHEET : 2 / 4	REV : A0
X . XX	+0.15mm -0.15mm	DRAWN:Zhang qinggao	SCALE : /	METRIC : mm
X . XXX	+0.10mm -0.10mm	DATE:2024.07.16	FILE:F:.DWG	THIRD ANGLE PROJECTION