82mm

38mm

R=2

ILIFE Robotic vacuum cleaner

Model: T20s

Input: 19V ⎓ 1A
Battery: Li-ion
Use only with {T20s} docking station
FCC ID: 2BD8J-T20S

Zhiyi (Zhongshan) Technology Co., Ltd.
No. 39, Donghui Road, Cuiheng New District, 528400 Zhongshan, Guangdong, PEOPLE'S REPUBLIC OF CHINA

MADE IN CHINA

www.iliferobot.com
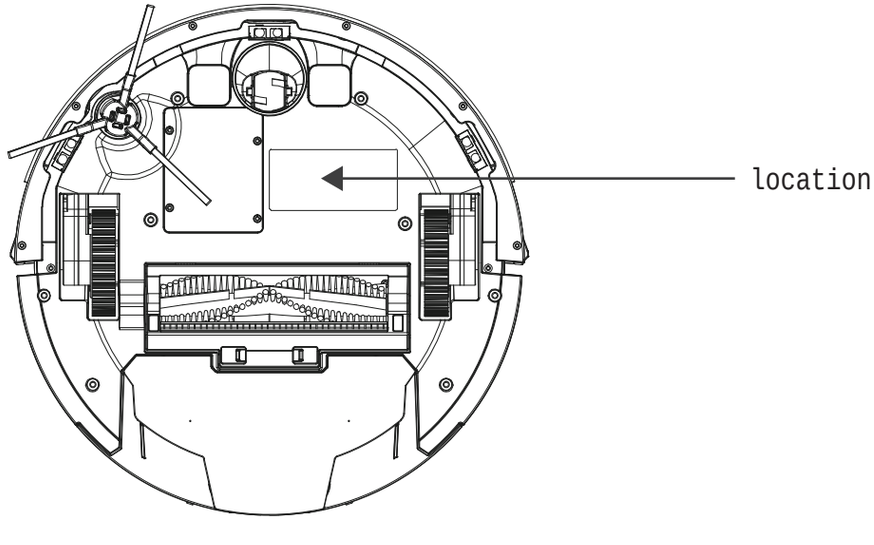
This device complies with part 15 of the FCC Rules. Operation is subject to the following two conditions:
(1) This device may not cause harmful interference, and (2) this device must accept any interference received, including interference that may cause undesired operation.