Label

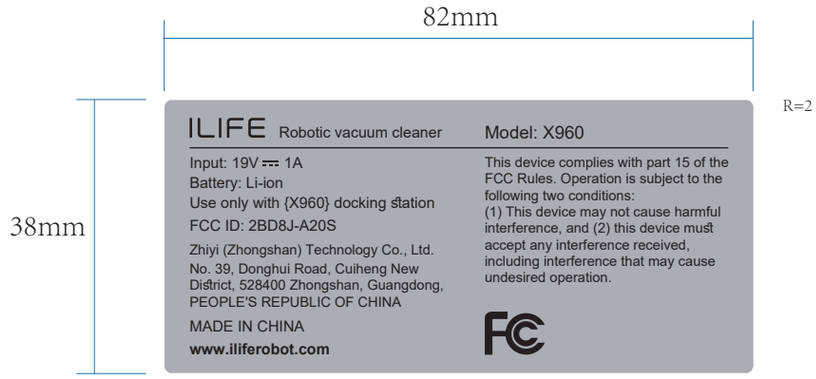
82mm
38mm
R=2
ILIFE Robotic vacuum cleaner
Model: X960
Input: 19V ⎓ 1A
Battery: Li-ion
Use only with {X960} docking station
FCC ID: 2BD8J-A20S
Zhiyi (Zhongshan) Technology Co., Ltd.
No. 39, Donghui Road, Cuiheng New District, 528400 Zhongshan, Guangdong, PEOPLE'S REPUBLIC OF CHINA
MADE IN CHINA
www.iliferobot.com
This device complies with part 15 of the FCC Rules. Operation is subject to the following two conditions:
(1) This device may not cause harmful interference, and (2) this device must accept any interference received, including interference that may cause undesired operation.
FC

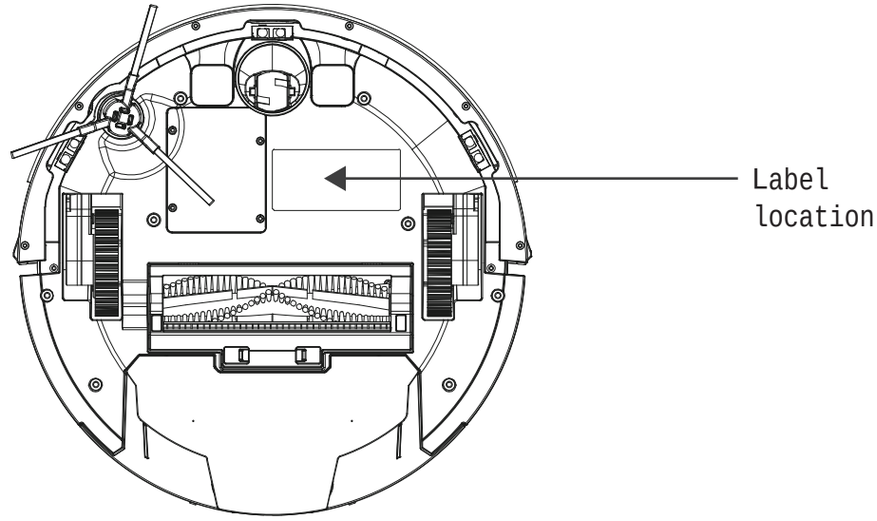
Label
location