SPECIFICATIONS FOR APPROVAL
official version

The specification data is the sample antenna data. Due to factors such as the product not being glued to the shell, there may be differences between the trial production machine and the specification data. However, after correction with the trial production machine, the data can remain consistent with the specification data

Customer Name:	Shenzhen Jiuzhou Yunhai Technology Co., Ltd.
Product Name:	WIFI 2.4G+5G_ AUX_ANT
Product Model:	N5095 0+0 14寸
Part Number:	LJF01-230626001A-R1A
Write By :	SiHeng Peng
Issued Date:	2023/6/26

CUSTOMER				
ENGINEER R&D DEPT	BUSSINESS DEPT	APPROVED BY	DATE	Edition/Part number
LEJIN				
R&D DEPT	ENGINEER R&D DEPT	APPROVAL	DATE	Edition/Part number

ECN/ECR			

Lejin radio frequency Proprietary Confidential © 2017 Lejin radio frequency Corporation. All rights reserved.

Index

1、Cover
2、Index
3、Product Specification
4、Test Equipment & Conditions
5、Test Report
6、Antenna Picture
7、Transmission line Specification
8、Product Drawing

Lejin radio frequency Proprietary Confidential © 2017 Lejin radio frequency Corporation. All rights reserved.

Electrical Characteristics					
Frequency	VSWR	Efficiency	Impedance	Polarization	Gain
2400 MHz ~2500 MHz	<1.6	>35%	50 Ohm	Linear	⩾2DB
5100MHZ--5900 MHZ	<2.5	>35%	50 Ohm	Linear	⩾3 DB

Material & Mechanical Characteristics				Environmental	
Material of Radiator	Cable Type	Connector Type	Dimension	Operation Temperature	Storage Temperature
BLACK	1.13	IPX_4		- 20 ˚C ~ + 50 ˚C	- 30 ˚C ~ + 80 ˚C

Test Equipment & Conditions

1. **Network Analyzers :Agilent 8753SE 5071C**
2. **Communications Test Set:Agilent E5515C/CMW500**
3. **3D Chamber Test System(ETS743)**

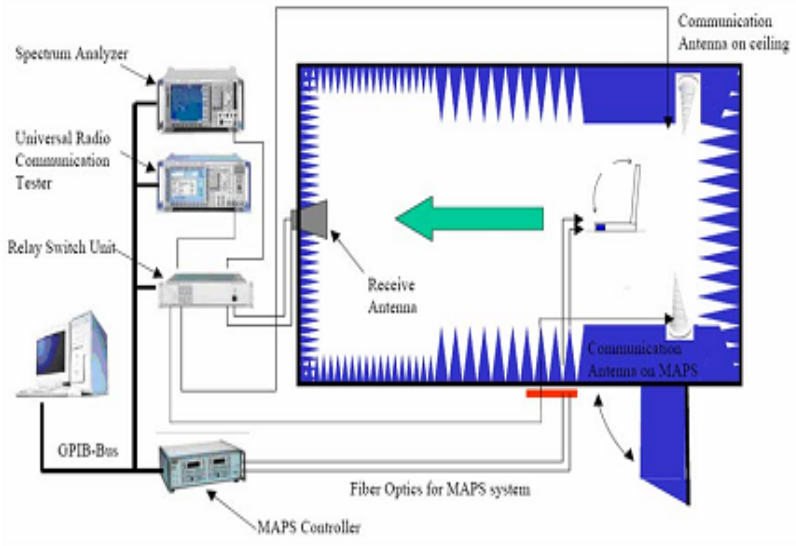

(Testing by 3D anechoic chamber)

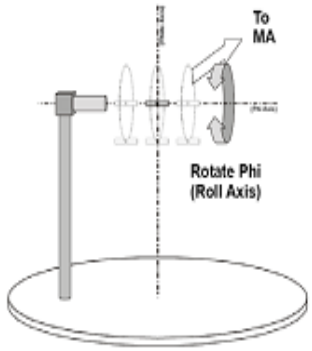

Phi axis test

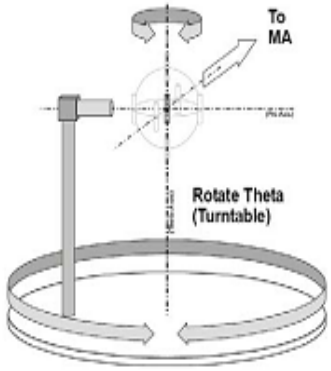

Theta axis test

Lejin radio frequency Proprietary Confidential © 2017 Lejin radio frequency Corporation. All rights reserved.

Antenna Impedance: WIFI ANT M:

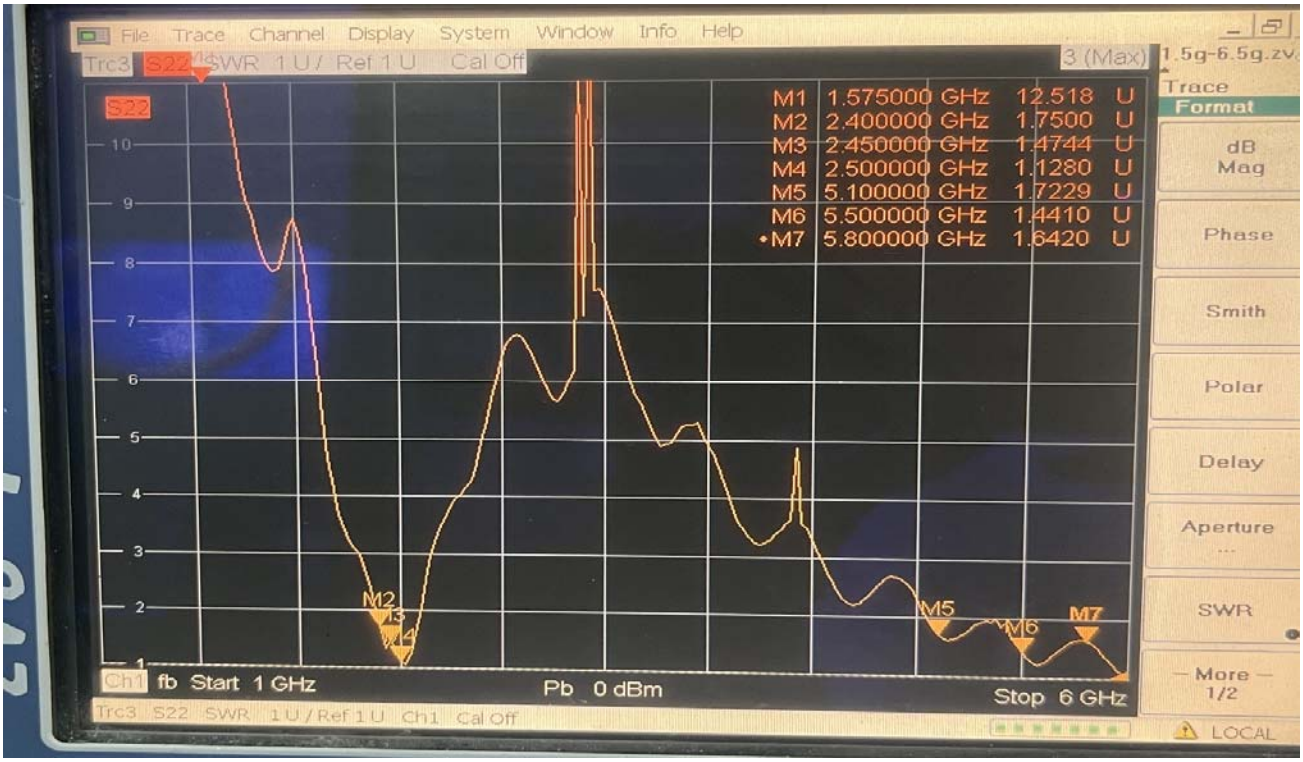

2.4G (Wifi/BT)	Freq	(MHz)	2400	2410	2420	2430	2450	2460	2470	2480	2490	2500	ANT M
	Effi	(%)	35.2	36.4	37.8	36.2	37.7	38.4	37.1	36.5	40.9	41.8	
	Gain	(dBi)	0.99	1.62	1.66	2.05	2.41	2	1.99	2.05	2.18	1.99	
5G WIFI	Freq	(MHz)	5150	5250	5350	5450	5550	5650	5750	5850	5950	6000	
	Effi	(%)	35.9	35.2	38	40	42.5	45.2	43.9	42.9	42.5	43.9	
	Gain	(dBi)	1.21	1.49	2.1	2.63	1.98	1.77	1.37	2.02	1.99	1.01	

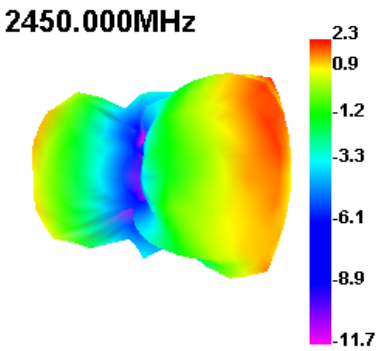

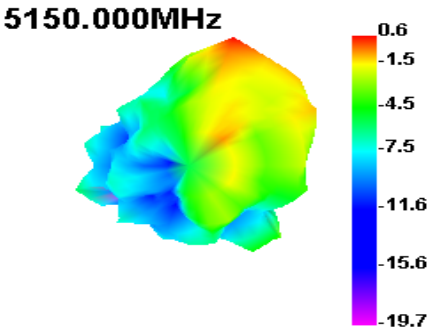

OTD_DATA:(The following OTD_DATA was tested by assembling the antenna according to the requirements of this specification. If the antenna is replaced or the installation method of the antenna is changed, the following OTD_DATA will become invalid. During the test, the BT needs to be turned off and the system should set the module to a non sleep state.)

WIFI 2G	802.11B 11MB	
	TRP(dBm)	TIS(dBm)
CH1	11.03	-81.2
CH6	11.07	-79.9
CH11	11.65	-79

WIFI 2G	802.11G 54MB	
	TRP(dBm)	TIS(dBm)
CH1	9.07	-68.5
CH6	11.67	-67.5
CH11	9.22	-67.1

WIFI 5G	802.11A 54MB	
	TRP(dBm)	TIS(dBm)
CH36	10.58	-69.2
CH149	10.1	-67.2
CH161	10.99	-68.4

WIFI 5G	802.11AN MCS7	
	TRP(dBm)	TIS(dBm)
CH36	9.5	-65.1
CH149	10.7	-65.7
CH161	11.19	-65.6

Lejin radio frequency Proprietary Confidential © 2017 Lejin radio frequency Corporation. All rights reserved.

Post antenna

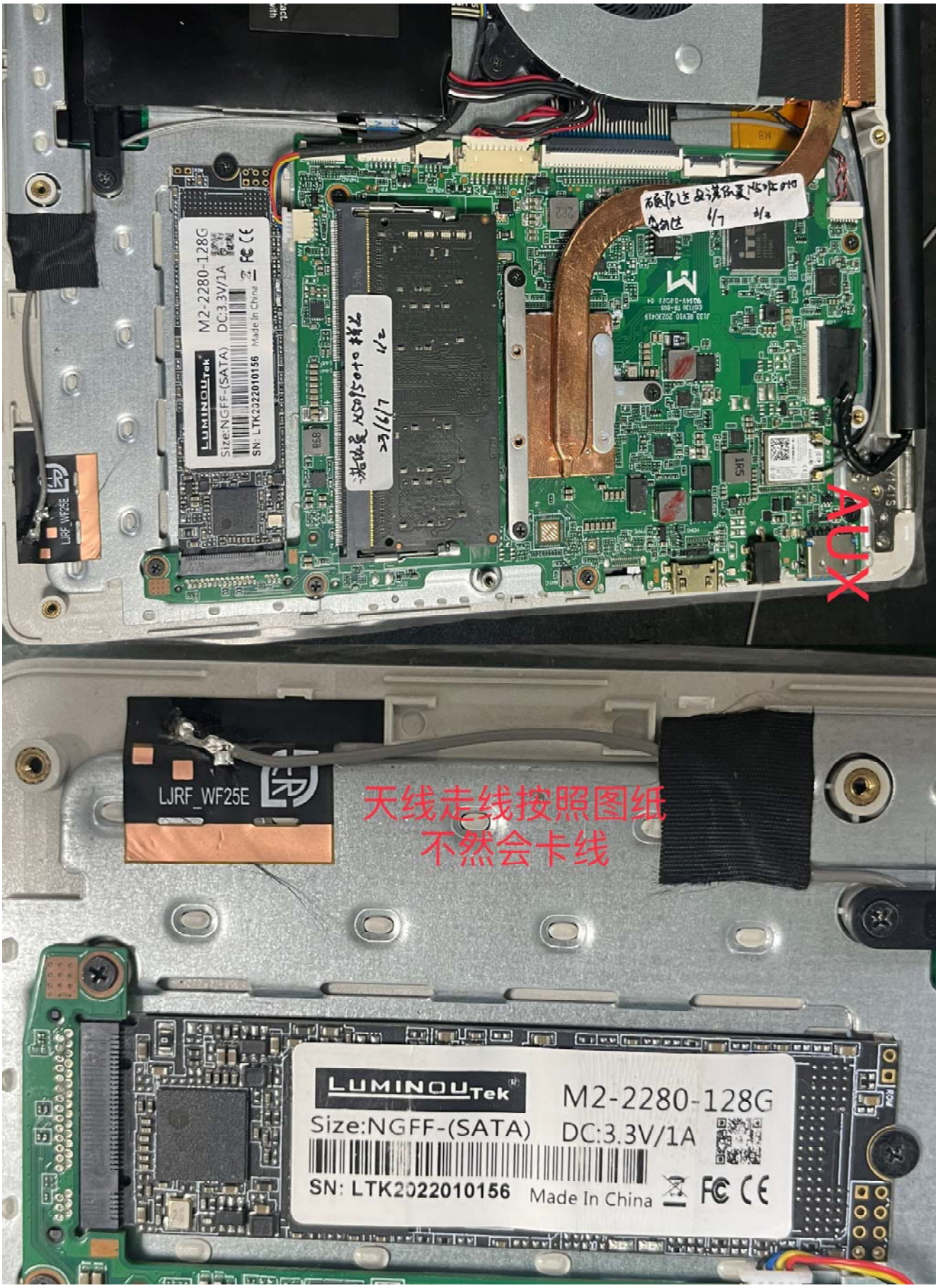

Lejin radio frequency Proprietary Confidential © 2017 Lejin radio frequency Corporation. All rights reserved.

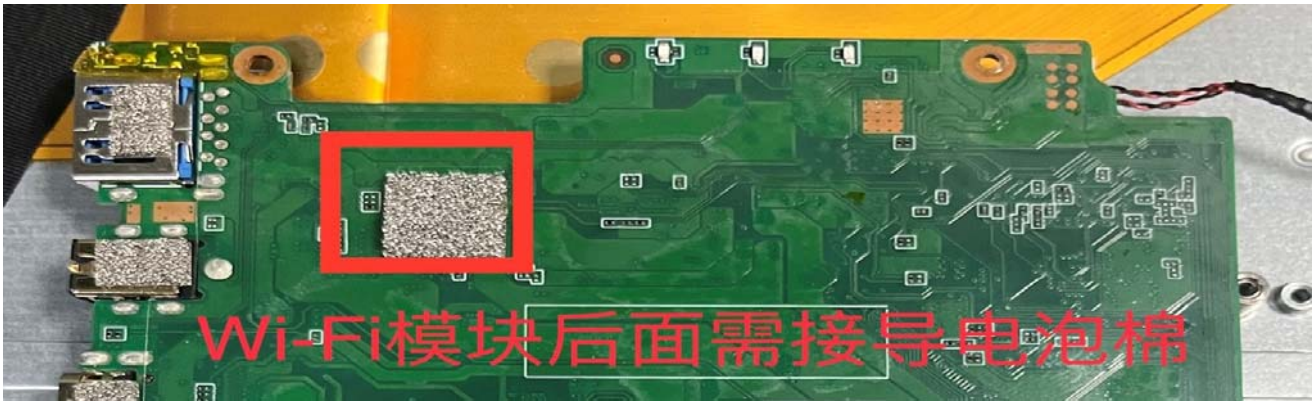

Lejin radio frequency Proprietary Confidential © 2017 Lejin radio frequency Corporation. All rights reserved.

由 Autodesk 教育版产品制作

RoHS
Compliant
G P

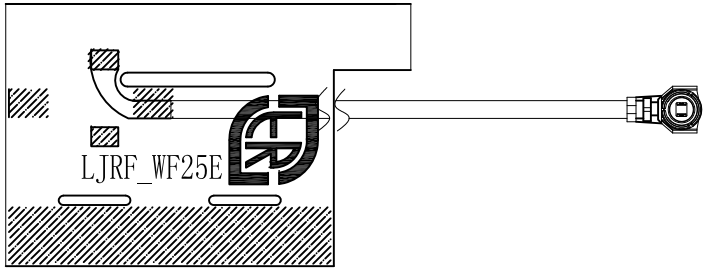

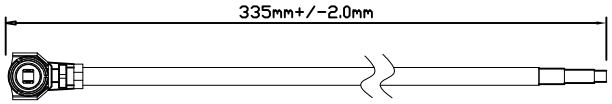

2:3:1

113G，IPX_4，L335mm.

深 圳 乐 进 射 频 科 技 有 限 公 司
SHEN ZHEN LEJIN RADIO FREQUENCY CO.,LTD

Third Angle				Project	14.1 N5095 0+0	Date	2023-06-26				
0～10	±0.05	○	0.02	Part Name	WIFI_AUX	Designed by					
10～18	±0.10	◎	∅0.03	Part No.		Checked by	MD				
18～30	±0.12	⊥	0.02	Material			RF				
30～40	±0.15	▱	0.04	Treatment	LJF01-230626001A-R1A	Approved by					
40～	±0.20	Angle	±0.5°			Unit	mm	Scale	FIT	Rev	A
Location											

Rev	Description	Date	Remark
A	New drawing		

由 Autodesk 教育版产品制作
由 Autodesk 教育版产品制作
由 Autodesk 教育版产品制作