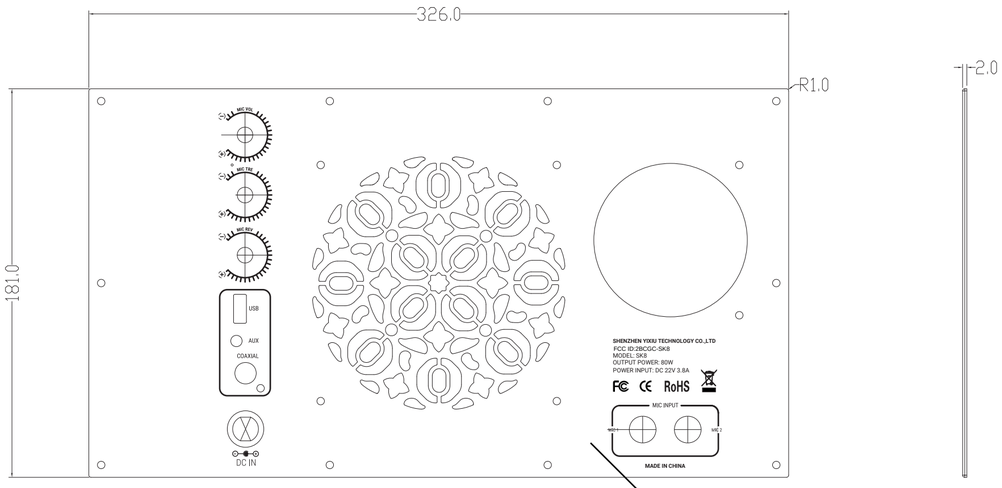
326.0
R1.0
181.0
MIC 2VN
MIC TRE
MIC REV
USB
AUX
COAXIAL
DC IN
SHENZHEN YIXIU TECHNOLOGY CO.,LTD
FCC ID:2BCGC-SK8
MODEL: SK8
OUTPUT POWER: 80W
POWER INPUT: DC 22V 3.8A
RoHS
MIC INPUT
MIC 1
MIC 2
MADE IN CHINA

2.0