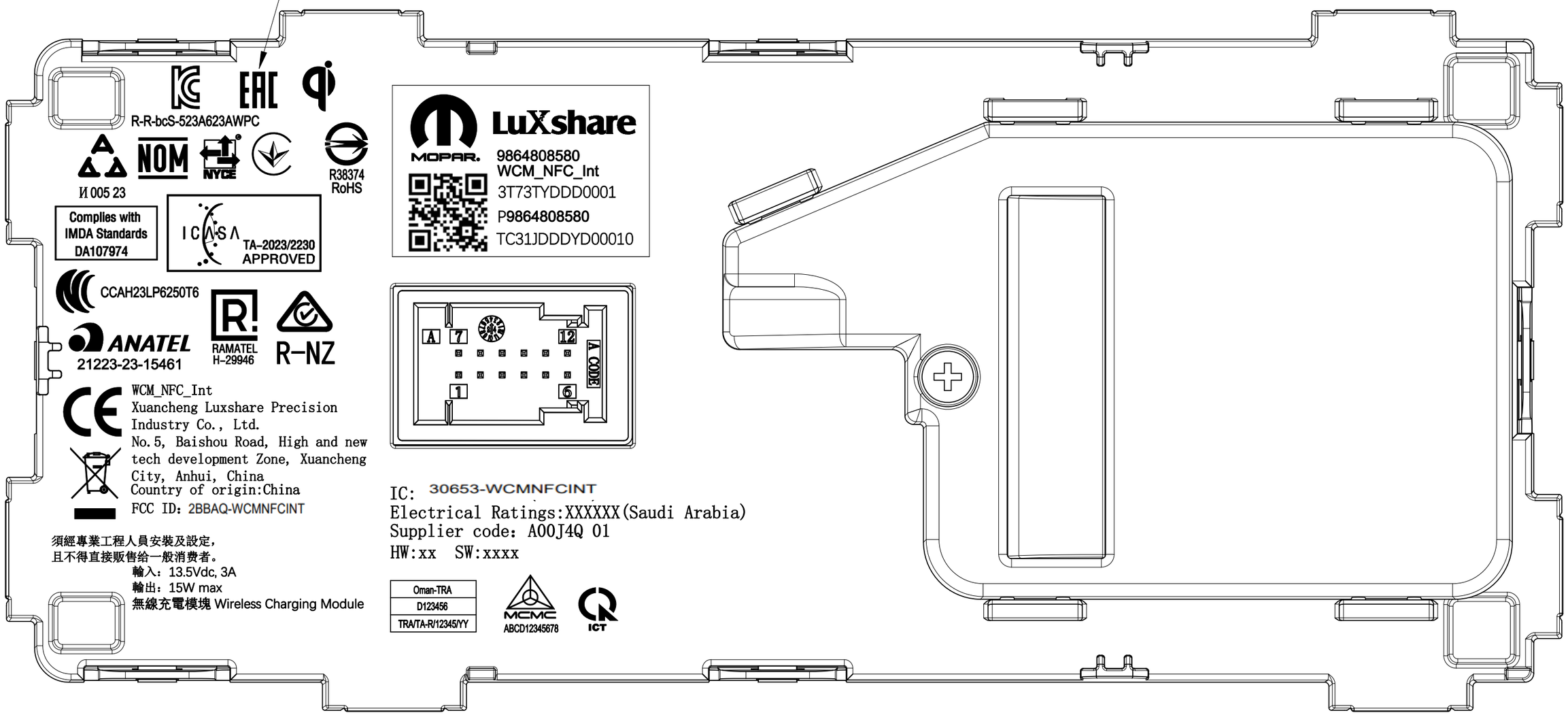Certification information(TBD)