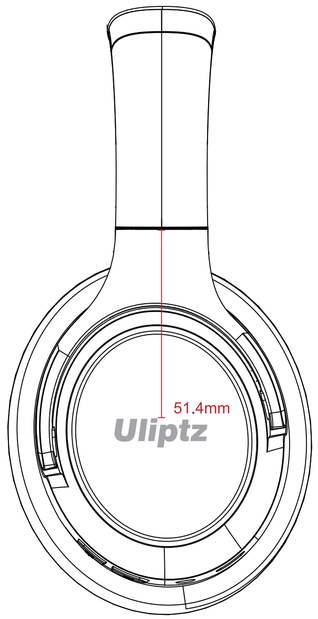
51.4mm
Uliptz

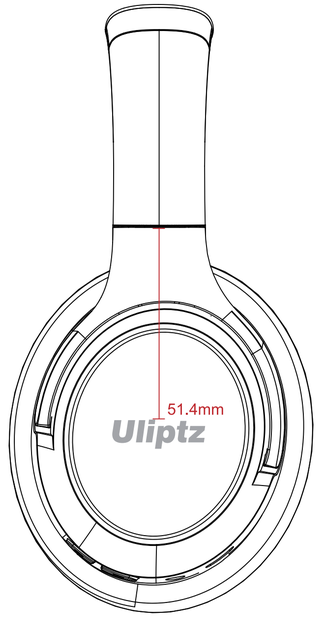
51.4mm
Uliptz

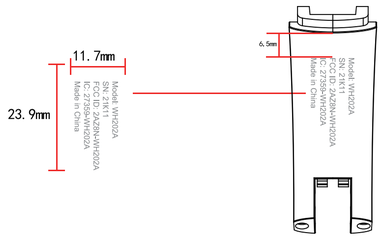
11. 7mm
23. 9mm
6. 5mm

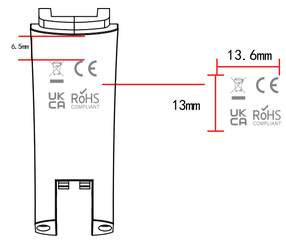
6. 5mm
13. 6mm
13mm